MX98702

100BASE-TX PMD TRANSCEIVER

FEATURE

* Compatible with ANSI X3T9.5 TP-PMD draft standard
* Compatible with ANSI IEEE 802.3 100 Base-T fast ethernet draft standard
* Integrated trans mitter and receiver with adaptive equalizer
* Programmable NRZI and MLT3 selection
* Programmable full equalization, normal equalization and equalization
* Isolated digital and analog power supply to minimize the power and ground noise
* Controlled transmit output slew rates to reduce EMI
* Tri-state control of transmit output current
* Loop back control for board diagnostics
* Single 5 Volts supply
* 28-pin PLCC

GENERAL DESCRIPTION

The MX98702 100Base-TX PMD transceiver is an integrated circuitcapable of transmitting and receiveing of 125 Mbaud three level (MLT-3) encoded datastream. it allows links of up to 100 meters of UTP (Unshielded Twisted paired cable) (over Category 5) and STP (Shielded Twisted paired cable).

PIN CONFIGURATION

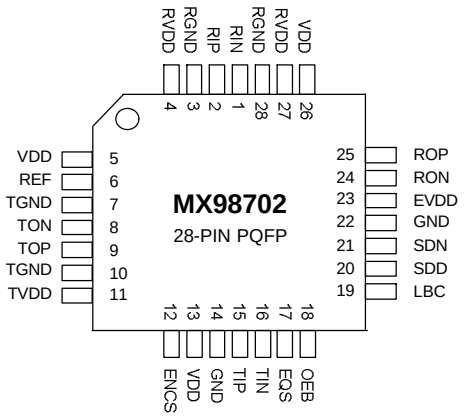

FUNCTIONAL BLOCK DIAGRAM

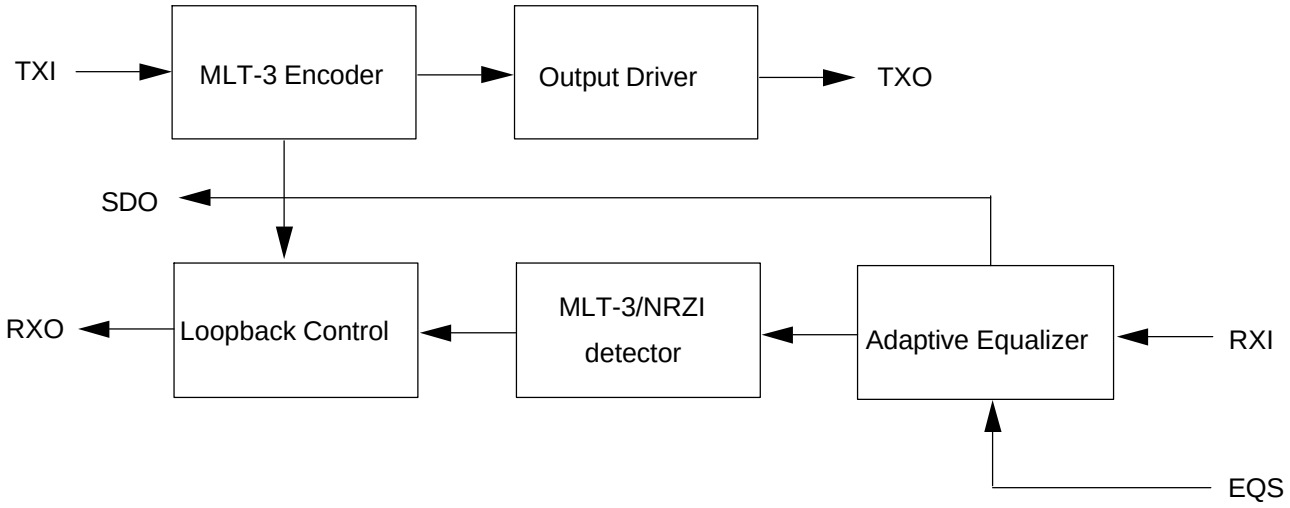

PIN DESCRIPTION

SIGNAL	PIN	PIN TYPE	DESCRIPTION
RIN	1	IN	Receive negative input, differential voltage in.
RIP	2	IN	Receive positive input, differential voltage in.
RGND	3	GND	Receive ground.
RVDD	4	VDD	Receive VDD.
VDD	5	VDD	Transmit VDD.
REF	6	OUT	A current output pin connected to a reference register.
TGND	7	GND	Transmit ground.
TON	8	OUT	Transmit negative output.
TOP	9	OUT	Transmit positive output.
TGND	10	GND	Transmit ground.
TVDD	11	VDD	Transmit VDD.
ENCS	12	IN	Encoder select.
VDD	13	VDD	Power supply.
GND	14	GND	Ground.
TIP	15	IN	Transmit positive PECL input.
TIN	16	IN	Transmit negative PECL input.
EQS	17	IN	Equalization select.
OEB	18	IN	Output enable.
LBC	19	IN	Loopback control.
SDP	20	OUT	Signal detect positive output, ECL output.
SDN	21	OUT	Signal detect negative output, ECL output.
GND	22	GND	Ground.
EVDD	23	VDD	External power supply.
RON	24	OUT	Receive negative output, ECL output.
ROP	25	OUT	Receive positive output, ECL output.
VDD	26	VDD	Power supply.
RVDD	27	VDD	Receive VDD.
RGND	28	GND	Receive ground.

FUNCTIONAL DESCRIPTION

The TON and TOP are generated from the input of TIP and TIN through the MLT-3 encoder. The outputs are either XRZI or MLT3 waveform depending on the input of ENCS. When ENCS is low the TON and TOP are NRZI outputs. When ENCS is high the TON and TOP are MLT-3 outputs.

The EQS will provide the choice of equalization. If pin EQS is over 2/3 of VDD, the equalization function is turn off. If it is below 1/3 of VDD, there will be a equalization for maximum length.

After the receive inputs are equalizated, they will go ahead to the MLT-3/NRZI decoder, and then the Lookback control block. Finally, the RON and ROP with PECL level come out off the chip.

SDP and SDN are generates to indicat that either a valid signal is present at RIN and RIP inputs or that loopback mode has been selected.

SDP and SD are also PECL level.

A voltage to current converter are integrated in the chip. The converter provides the reference current for transmit output. The current can be controlled through an external register which is connected to the REF pin.

ABSOLUTE MAXIMUM RATINGS

Logic Power Referenced to GND	-0.5V to +0.7V
Received Power Referenced to RGND	-0.5V to +0.7V
Transmit Power Referenced to TGND	-0.5V to +0.7V
ECL output Power Referenced to GND	-0.5V to +0.7V
DC output current (High)	-50mA
ESD	TBD
Storage Temperature	-6.5℃ to +150℃

DC ELECTRICAL CHARACTERISTIC TA=25℃

SYMBOL	PARAMETER	CONDITIONS	MIN	TYP	MAX	UNITS
VIHt	TTL High Level Input		2.0			V
VILt	TTL Low Level Input				0.8	V
VIHschmitt	Schmitt High Level Input		3.7			V
VILschmitt	Schmitt Low Level Input				1.5	V
VIHeqsel	EQSEL High Level Input		3.7			V
VILeqsel	EQSEL Low Level Input				1.5	V
VIMeqsel	EQSEL Mid Level Input			Vcc/2		V
VIHe	ECL High Level Input		Vcc-1165		Vcc-880	mV
VILe	ECL Low Level Input		Vcc-1810		Vcc-1475	mV
VOHe	ECL High Level Output	Note 1	Vcc-1025		Vcc-880	mV
VOLe	ECL Low Level Output	Note 1	Vcc-1810		Vcc-1620	mV
ICC1	Partial Supply Current	Note 1		90		mA
ICCT	Total Supply Currit	Note 1		145		mA
ITXO1	Transmit Current 1	Transmit Current/50 ohm Zo			TBD	mA
ITXO2	Transmit Current 2	Transmit Current/75 ohm Zo			TBD	mA
SDTHon	Sig Det Turn-on Threshold			900		mV
SDTHoff	Sig Det Turn-off Threshold			750		mV

Note 1

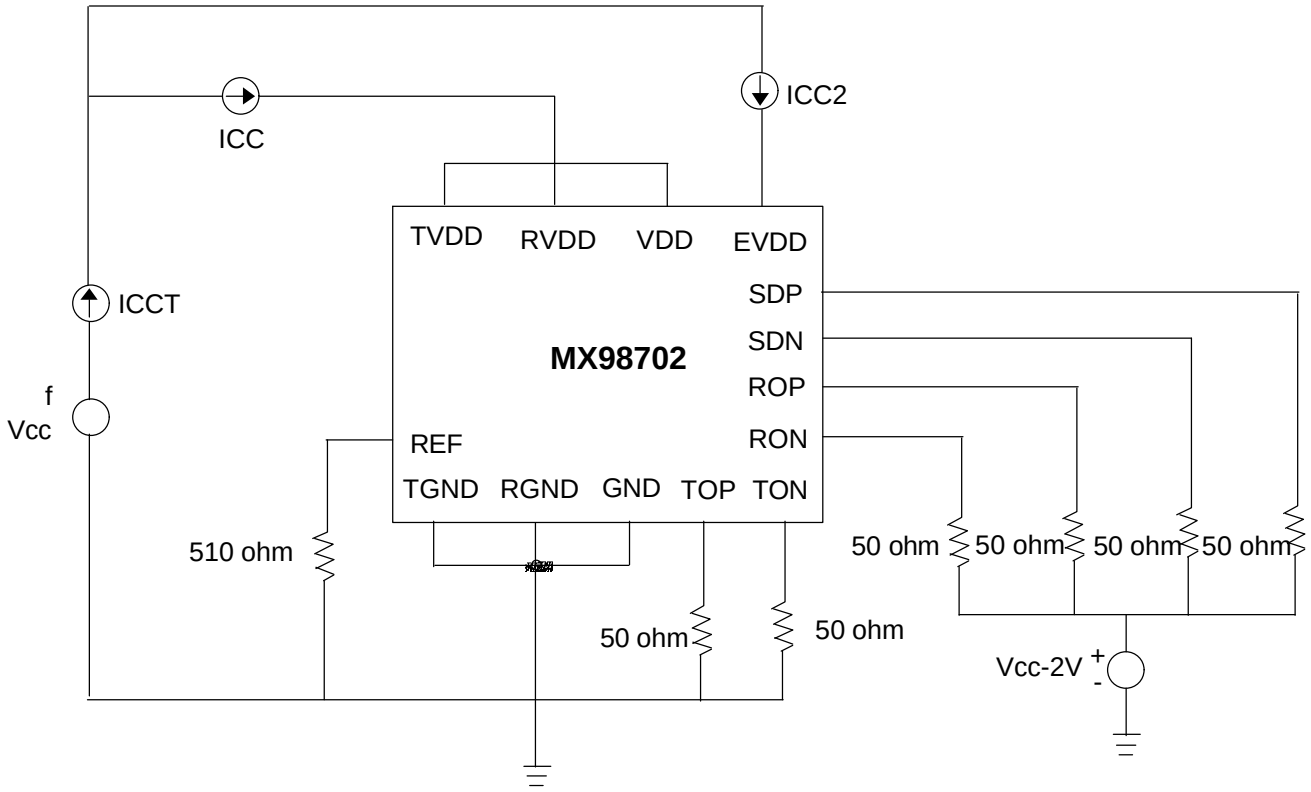
ICC
ICC2
ICCT
f
Vcc
TVDD
RVDD
VDD
EVDD
SDP
SDN
MX98702
ROP
REF
RON
TGND
RGND
GND
TOP
TON
510 ohm
50 ohm
50 ohm
50 ohm
50 ohm
50 ohm
50 ohm
Vcc-2V
+
-

AC CHARACTERISTICS

SYMBLE	PARAMETER	CONDITION	MIN	TYP	MAX	UNIT
TDr	TOP, TON rise and Fall time			2.0		ns
TOj	ROP, TON jitter			800		ps
ROj	ROP, RON jitter					ns
TOd	TOP, TON propogation delay			TBD		ps
ROd	ROP, RON, proguation delay			TBD		ps

PACKAGE INFORMATION

28-PIN PLCC

MACRONIX INTERNATIONAL CO., LTD.

No.3, Creation Road III, Science-Based Industrial Park, Hsin Chu, Taiwan, R.O.C.

TEL:(035)-788-888

FAX:(035)-788-887

TAIPEI OFFICE:

12F, No.4, Sec 3, Min-Chuan E. Rd., Taipei, Taiwan, R.O.C.

TEL:(02)-509-3300

FAX:(02)-509-2200

MACRONIX INC.

1348 Ridder Park Drive, San Jose, CA95131 U.S.A.

TEL:(408)-453-8088

FAX:(408)-453-8488

MACRONIX JAPAN K.K.

14F, 1-1-2 Marunouchi Chiyoda-Ku, Tokyo 100, Japan.

TEL:(03)-3217-3107

FAX:(03)-3217-3148