MX69N MCPs

Multiplexed, 1.8V Burst-mode

64 Megabit

(Data Sheet)

MCP FEATURES

- **Power supply voltage of 1.7V to 1.95V**
- **Burst Read: 104 MHz**
- **Package - MCP BGA: 0.5mm ball pitch**
  - 6.2 x 7.7mm, 56 ball
- **Operating Temperature Range**
  - Wireless, -25°C to +85°C

Product Description

This MX69N-E product series combine MX29NS-E with pSRAM in a Multi-Chip package. For detailed specifications, please refer to the individual datasheet.

Product Selection Guide

Device	Flash Density	Flash Speed	pSRAM Speed	Package Type
MX69N64E32AXJW	64Mb	104MHz	104MHz	6.2x7.7 56-TFBGA
MX69N64E32BXJW	64Mb	104MHz	104MHz	6.2x7.7 56-TFBGA

BLOCK DIAGRAM

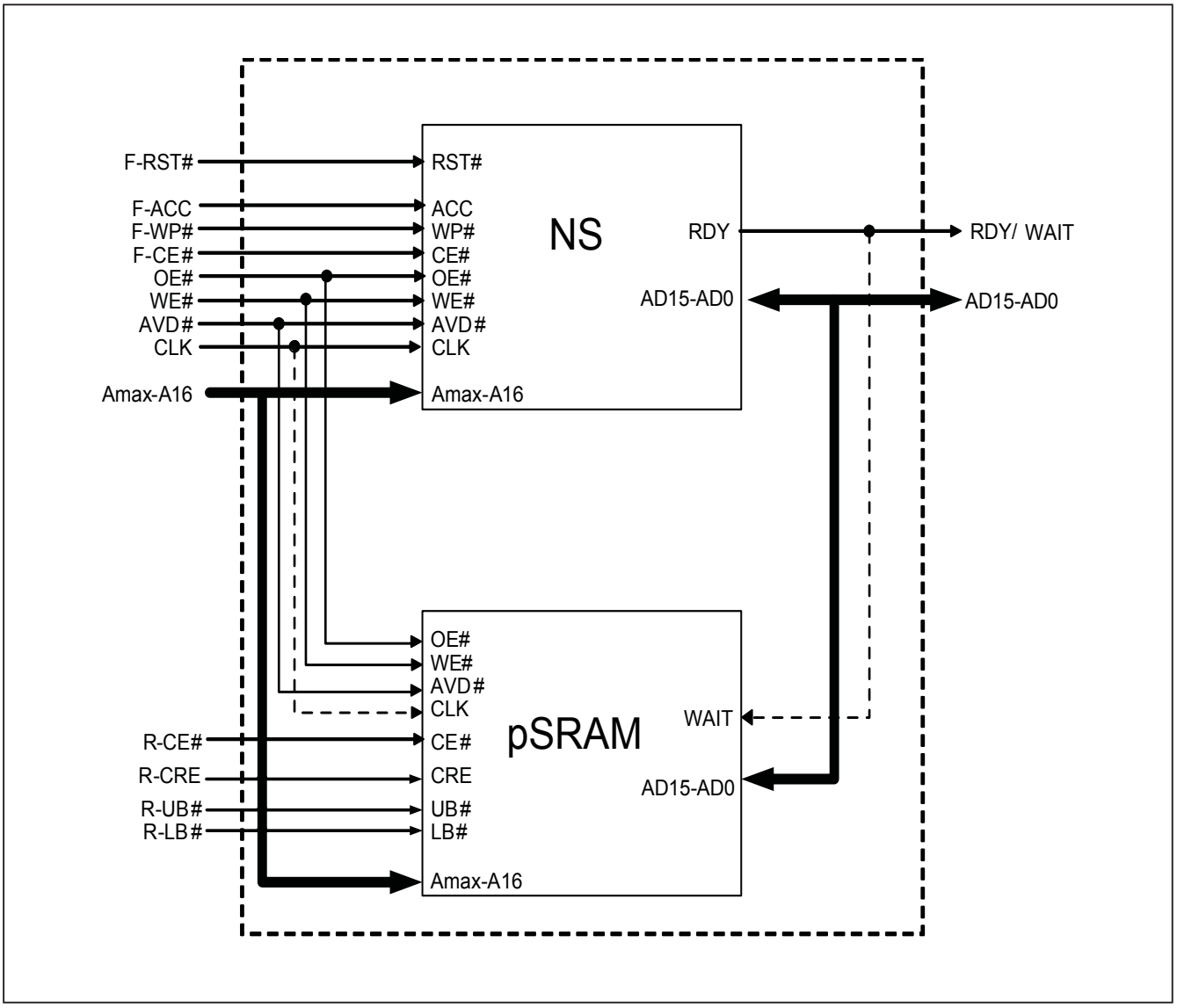

PIN CONFIGURATIONS

pSRAM Based Pinout, 56-Ball, VFBGA
(Top View, Balls Facing Down)

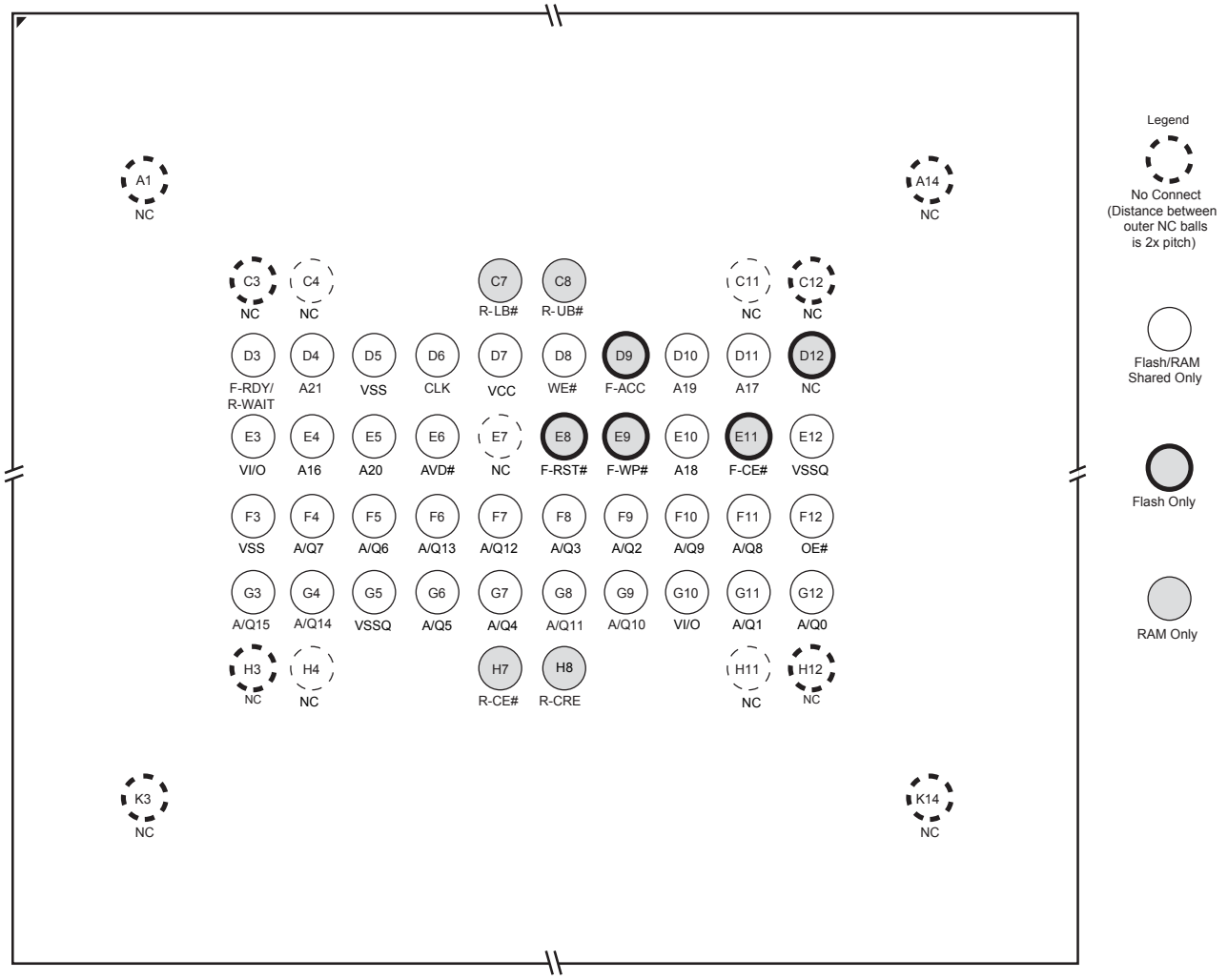

Notes

1. Addresses are shared between Flash and RAM depending on the density of the pSRAM.

MCP	Flash-only Addresses	Shared Addresses	Shared AQ Pins
MX69N64E32	A21	A20~A16	AQ15-AQ0

PIN DESCRIPTION

SYMBOL	DESCRIPTION	Flash	RAM
Amax-A16	Address Inputs	V	V
A/Q15~A/Q0	Multiplexed Data Inputs/Outputs	V	V
OE#	Output Enable Input	V	V
WE#	Write Enable Input	V	V
VCC	Device Power Supply (1.70V~1.95V)	V	V
VI/O	Input/Output Power Supply (1.70V~1.95V)	V	V
VSS	Device Ground	V	V
VSSQ	Input/Output Ground	V	V
NC	No Connection	V	V
RDY	Ready output, the status of the Burst Read	V	V
	Refer to configuration register table		
CLK	Clock	V	V
AVD#	Address Valid Data input.	V	V
F-RBST#	Hardware Reset Pin, Active Low	V	
F-WP#	Hardware Write Protect	V	
F-ACC	Programming Acceleration Input	V	
R-CE#	Chip-enable input for pSRAM.		V
F-CE#	Chip-enable input for Flash. Asynchronous relative to CLK for Burst Mode.	V	
R-CRE	Control Register Enable (pSRAM).		V
R-UB#	Upper Byte Control (pSRAM).		V
R-LB#	Lower Byte Control (pSRAM).		V

PART NAME DESCRIPTION

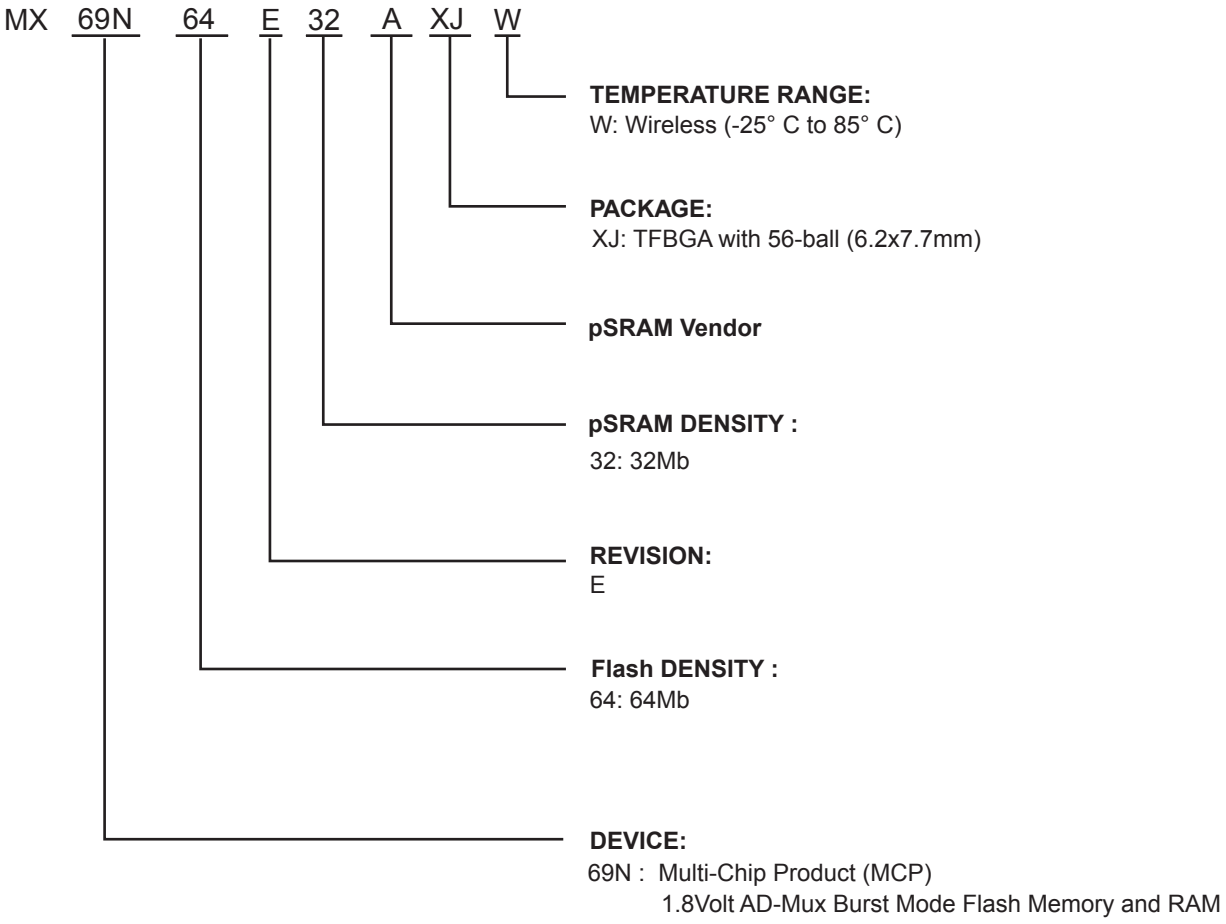

PACKAGE INFORMATION

Doc. Title: Package Outline for CSP 56BALL(7.7X6.2X1.2MM,BALL PITCH 0.5MM,BALL DIAMETER 0.3MM)

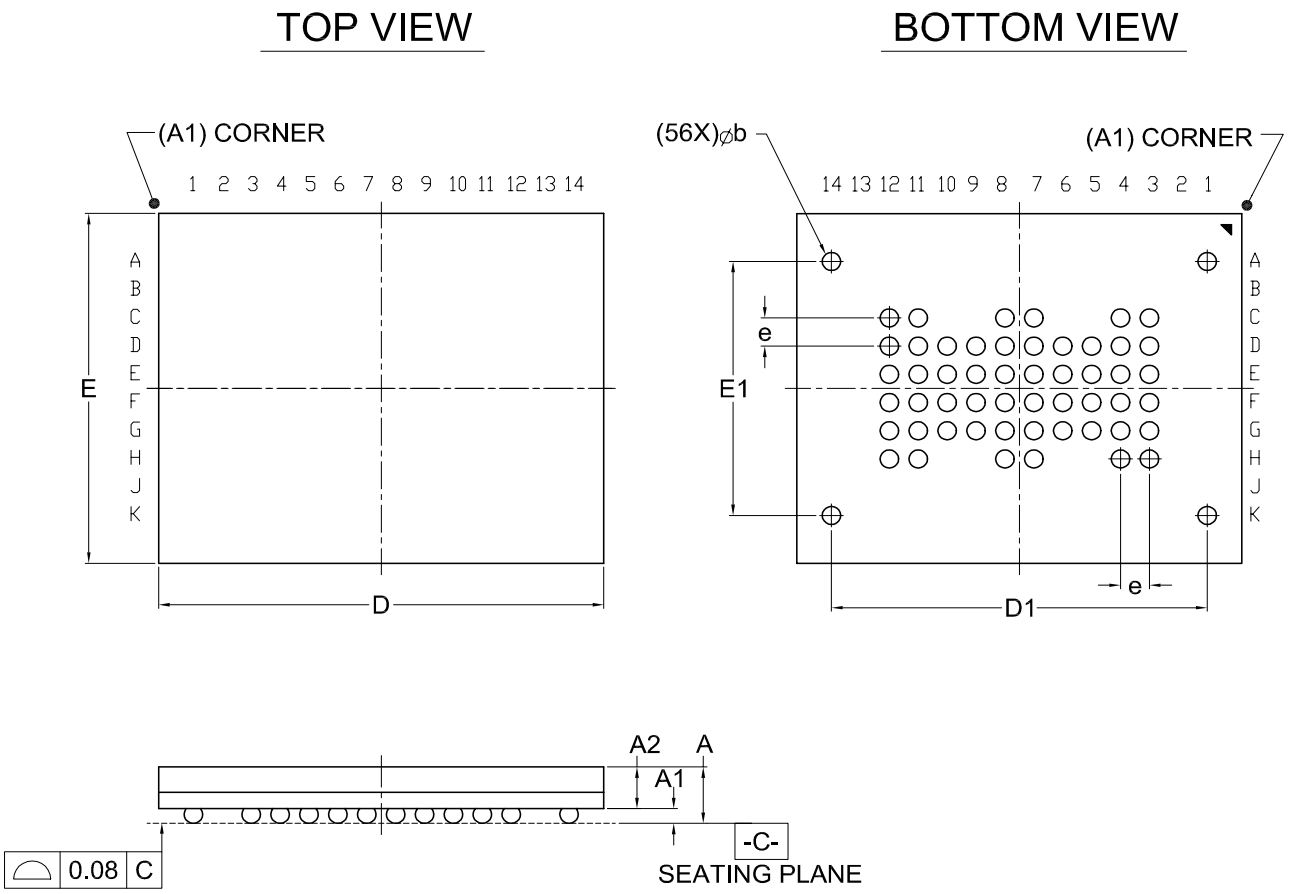

Dimensions (inch dimensions are derived from the original mm dimensions)

SYMBOL / UNIT		A	A1	A2	b	D	D1	E	E1	e
mm	Min.	---	0.16	0.65	0.25	7.6	---	6.1	---	---
	Nom.	---	0.21	---	0.30	7.7	6.5	6.2	4.5	0.50
	Max.	1.20	0.26	---	0.35	7.8	---	6.3	---	---
Inch	Min.	---	0.006	0.026	0.010	0.299	---	0.240	---	---
	Nom.	---	0.008	---	0.012	0.303	0.256	0.244	0.177	0.0197
	Max.	0.047	0.010	---	0.014	0.307	---	0.248	---	---

Dwg. No.	Revision	Reference			
		JEDEC	EIAJ		
6110-4264	1				

REVISION HISTORY

Revision No.	Description	Page	Date
0.01	1. Added MX69N28E64AXJW & MX69N28E64FXJW 2. Modified table-PIN DESCRIPTION	P3,5,7 P6	JAN/18/2011
1.0	1. Removed Advanced Information	P2	MAY/30/2011
1.1	1. Modified Product Selection Guide	P3	MAY/10/2012
1.2	1. Removed 128Mb	All	JUL/22/2013

Except for customized products which has been expressly identified in the applicable agreement, Macronix's products are designed, developed, and/or manufactured for ordinary business, industrial, personal, and/or household applications only, and not for use in any applications which may, directly or indirectly, cause death, personal injury, or severe property damages. In the event Macronix products are used in contradicted to their target usage above, the buyer shall take any and all actions to ensure said Macronix's product qualified for its actual use in accordance with the applicable laws and regulations; and Macronix as well as it's suppliers and/or distributors shall be released from any and all liability arisen therefrom.

Copyright© Macronix International Co., Ltd. 2010~2013. All rights reserved, including the trademarks and tradename thereof, such as Macronix, MXIC, MXIC Logo, MX Logo, Integrated Solutions Provider, NBit, Nbit, NBiit, Macronix NBit, eLiteFlash, HybridNVM, HybridFlash, XtraROM, Phines, KH Logo, BE-SONOS, KSMC, Kingtech, MXSMIO, Macronix vEE, Macronix MAP, Rich Audio, Rich Book, Rich TV, and FitCAM. The names and brands of third party referred thereto (if any) are for identification purposes only.

For the contact and order information, please visit Macronix's Web site at: http://www.macronix.com