3V, 8G-bit NAND Flash Memory

MX60LF8G18AC

Contents

1. FEATURES 6

2. GENERAL DESCRIPTIONS 7

Figure 1. Logic Diagram 7

2-1. ORDERING INFORMATION 8

3. PIN CONFIGURATIONS 10

3-1. PIN DESCRIPTIONS 12

4. BLOCK DIAGRAM 14

5. SCHEMATIC CELL LAYOUT AND ADDRESS ASSIGNMENT 15

Table 1-1. Address Allocation 15

6. DEVICE OPERATIONS 16

6-1. Address Input/Command Input/Data Input 16

Figure 2. AC Waveforms for Command / Address / Data Latch Timing 16
Figure 3. AC Waveforms for Address Input Cycle 16
Figure 4. AC Waveforms for Command Input Cycle 17
Figure 5. AC Waveforms for Data Input Cycle 17

6-2. Page Read 18

Figure 6. AC Waveforms for Read Cycle 18
Figure 7. AC Waveforms for Read Operation (Intercepted by CE#) 19
Figure 8. AC Waveforms for Read Operation (with CE# Don't Care) 20
Figure 9-1. AC Waveforms for Sequential Data Out Cycle (After Read) 20
Figure 9-2. AC Waveforms for Sequential Data Out Cycle (After Read) - EDO Mode 21
Figure 10. AC Waveforms for Random Data Output 22

6-3. Cache Read Sequential 23

Figure 11-1. AC Waveforms for Cache Read Sequential 24

6-4. Cache Read Random 25

Figure 11-2. AC Waveforms for Cache Read Random 26

6-5. Page Program 27

Figure 12. AC Waveforms for Program Operation after Command 80H 27
Figure 13. AC Waveforms for Random Data In (For Page Program) 28
Figure 14. AC Waveforms for Program Operation with CE# Don't Care 29

6-6. Cache Program 30

Figure 15-1. AC Waveforms for Cache Program 31
Figure 15-2. AC Waveforms for Sequence of Cache Program 32

6-7. Block Erase 33
Figure 16. AC Waveforms for Erase Operation 33
6-8. ID Read 34
Table 2. ID Codes Read Out by ID Read Command 90H 34
Table 3. The Definition of Byte2~Byte4 of ID Table 35
Figure 17-1. AC Waveforms for ID Read Operation 36
Figure 17-2. AC Waveforms for ID Read (ONFI Identifier) Operation 36
6-9. Status Read 37
Table 4. Status Output 37
Figure 18. Bit Assignment (HEX Data) 38
Figure 19. AC Waveforms for Status Read Operation 38
6-10. Status Enhance Read 39
Figure 20. AC Waveforms for Status Enhance Operation 39
6-11. Reset 40
Figure 21. AC waveforms for Reset Operation 40
6-12. Parameter Page Read (ONFI) 41
Figure 22. AC waveforms for Parameter Page Read (ONFI) Operation 41
Figure 23. AC Waveforms for Parameter Page Read (ONFI) Random Operation (For 05h-E0h) 42
Table 5. Parameter Page (ONFI) 43
6-13. Unique ID Read (ONFI) 45
Figure 24. AC waveforms for Unique ID Read Operation 45
Figure 25. AC waveforms for Unique ID Read Operation (For 05h-E0h) 46
6-14. Feature Set Operation (ONFI) 47
Table 6-1. Definition of Feature Address 47
Table 6-2. Sub-Feature Parameter Table of Feature Address - 90h (Array Operation Mode) 47
6-14-1. Set Feature (ONFI) 48
Figure 26. AC Waveforms for Set Feature (ONFI) Operation 48
6-14-2. Get Feature (ONFI) 49
Figure 27. AC Waveforms for Get Feature (ONFI) Operation 49
6-14-3. Secure OTP (One-Time-Programmable) Feature 50
Figure 28. AC Waveforms for OTP Data Read 50
Figure 29. AC Waveforms for OTP Data Read with Random Data Output 51
Figure 30. AC Waveforms for OTP Data Program 52
Figure 31. AC Waveforms for OTP Data Program with Random Data Input 53
Figure 32. AC Waveforms for OTP Protection Operation 54

6-15. Two-Plane Operations 55
6-16. Two-plane Program (ONFI) and Two-plane Cache Program (ONFI) 55
Figure 33-1. AC Waveforms for Two-plane Program (ONFI) 56
Figure 33-2. AC Waveforms for Page Program Random Data Two-plane (ONFI) 57
Figure 34. AC Waveforms for Two-plane Cache Program (ONFI) 58
6-17. Two-plane Block Erase (ONFI) 59
Figure 35. AC Waveforms for Two-plane Erase (ONFI) 59
6-18. Interleaved Die Operations 59
Figure 36-1. AC Waveforms for Interleaving Block Erase 60
Figure 36-2. AC Waveforms for Interleaving Cache Program 60
Figure 36-3. AC Waveforms for Interleaving Page Progrm to Read 61
Figure 36-4. AC Waveforms for Interleaving Page Progrm 61
Figure 36-5 AC Waveforms for Interleaving Page Read 62
Figure 36-6. AC Waveforms for Interleaving two plane block erase 62
Figure 36-7. AC Waveforms for Interleaving two plane page program 63
7. PARAMETERS 64
7-1. ABSOLUTE MAXIMUM RATINGS 64
Table 7. Operating Range 65
Table 8. DC Characteristics 65
Table 9. Capacitance 66
Table 10. AC Testing Conditions 66
Table 11. Program and Erase Characteristics 66
Table 12. AC Characteristics 67
8. OPERATION MODES: LOGIC AND COMMAND TABLES 68
Table 13. Logic Table 68
Table 14-1. HEX Command Table 69
Table 14-2. Two-plane Command Set 69
8-1. R/B#: Termination for The Ready/Busy# Pin (R/B#) 70
Figure 37. R/B# Pin Timing Information 71
8-2. Power On/Off Sequence 72
Figure 38. Power On/Off Sequence 72
8-2-1. WP# Signal 73
Figure 39-1. Enable Programming of WP# Signal 73
Figure 39-2. Disable Programming of WP# Signal 73
Figure 39-3. Enable Erasing of WP# Signal 73
Figure 39-4. Disable Erasing of WP# Signal 73

9. SOFTWARE ALGORITHM 74

9-1. Invalid Blocks (Bad Blocks) 74

Figure 40. Bad Blocks 74

Table 15. Valid Blocks 74

9-2. Bad Block Test Flow 75

Figure 41. Bad Block Test Flow 75

9-3. Failure Phenomena for Read/Program/Erase Operations 75

Table 16. Failure Modes 75

9-4. Program 76

Figure 42. Failure Modes 76

Figure 43. Program Flow Chart 76

9-5. Erase 76

Figure 44. Erase Flow Chart 77

Figure 45. Read Flow Chart 77

10. PACKAGE INFORMATION 78

11. REVISION HISTORY 80

1. FEATURES

- 8G-bit SLC NAND Flash
  - Stacked by two 4Gb die
  - Bus: x8
  - Page size: (2048+64) byte,
  - Block size: (128K+4K) byte,
  - Plane size:
    2048-block/plane x 2 per die
- **ONFI 1.0 compliant**
- **Multiplexed Command/Address/Data**
- **User Redundancy**
  - 64-byte attached to each page
- **Fast Read Access**
  - Latency of array to register: 25us
  - Sequential read: 20ns
- **Cache Read Support**
- **Page Program Operation**
  - Page program time: 300us (typ.)
- **Cache Program Support**
- **Block Erase Operation**
  - Block erase time: 1ms (typ.)
- **Single Voltage Operation:**
  - VCC: 2.7 ~ 3.6V
- **Low Power Dissipation**
  - Max. 30mA
    Active current (Read/Program/Erase)
- **Sleep Mode**
  - 100uA (Max) standby current
- **Hardware Data Protection:** WP# pin
- **Device Status Indicators**
  - Ready/Busy (R/B#) pin
  - Status Register
- **Chip Enable Don't Care**
  - Simplify System Interface
- **Unique ID Read support (ONFI)**
- **Secure OTP support**
- **Electronic Signature (5 Cycles)**
- **High Reliability**
  - Endurance: typical 100K cycles (with 4-bit ECC per (512+16) Byte)
  - Data Retention: 10 years
- **Wide Temperature Operating Range**
  -40°C to +85°C
- **Package:**
  1) 48-TSOP(I) (12mm x 20mm)
  2) 63-ball 9mmx11mm VFBGA
  All packaged devices are RoHS Compliant and Halogen-free.

2. GENERAL DESCRIPTIONS

The MX60LF8G18AC is an 8Gb SLC NAND Flash memory device. Its standard NAND Flash features and reliable quality of typical P/E cycles 100K (with ECC), which makes it most suitable for embedded system code and data storage.

The product family requires 4-bit ECC per (512+16)B.

The MX60LF8G18AC is typically accessed in pages of 2,112 bytes for read and program operations.

The MX60LF8G18AC array is organized as thousands of blocks, which is composed by 64 pages of (2,048+64) byte in two NAND strings structure with 32 serial connected cells in each string. Each page has an additional 64 bytes for ECC and other purposes. The device has an on-chip buffer of 2,112 bytes for data load and access.

The Cache Read Operation of the MX60LF8G18AC enables first-byte read-access latency of 25us and sequential read of 20ns and the latency time of next sequential page will be shorten from tR to tRCBSY.

The MX60LF8G18AC power consumption is 30mA during all modes of operations (Read/Program/Erase), and 100uA in standby mode.

Figure 1. Logic Diagram

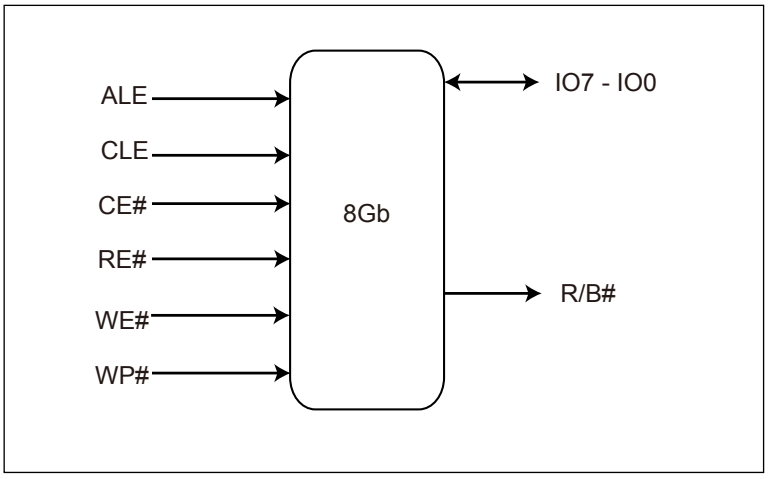

2-1. ORDERING INFORMATION

Part Name Description

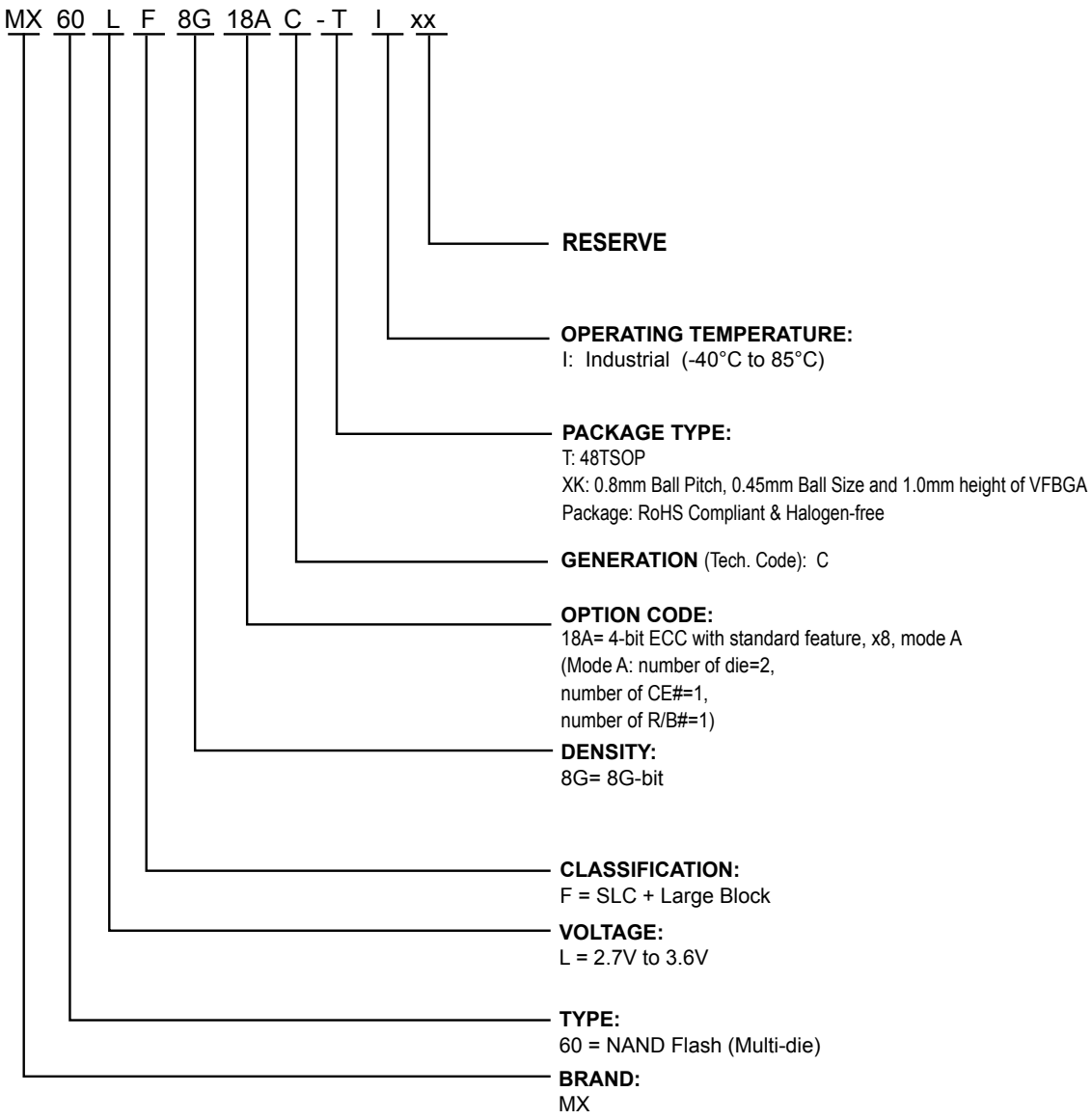

Part Number	Density	Organization	VCC Range	Package	Temperature Grade
MX60LF8G18AC-TI	8Gb	x8	3V	48-TSOP	Industrial
MX60LF8G18AC-XKI	8Gb	x8	3V	63-VFBGA	Industrial

3. PIN CONFIGURATIONS

48-TSOP

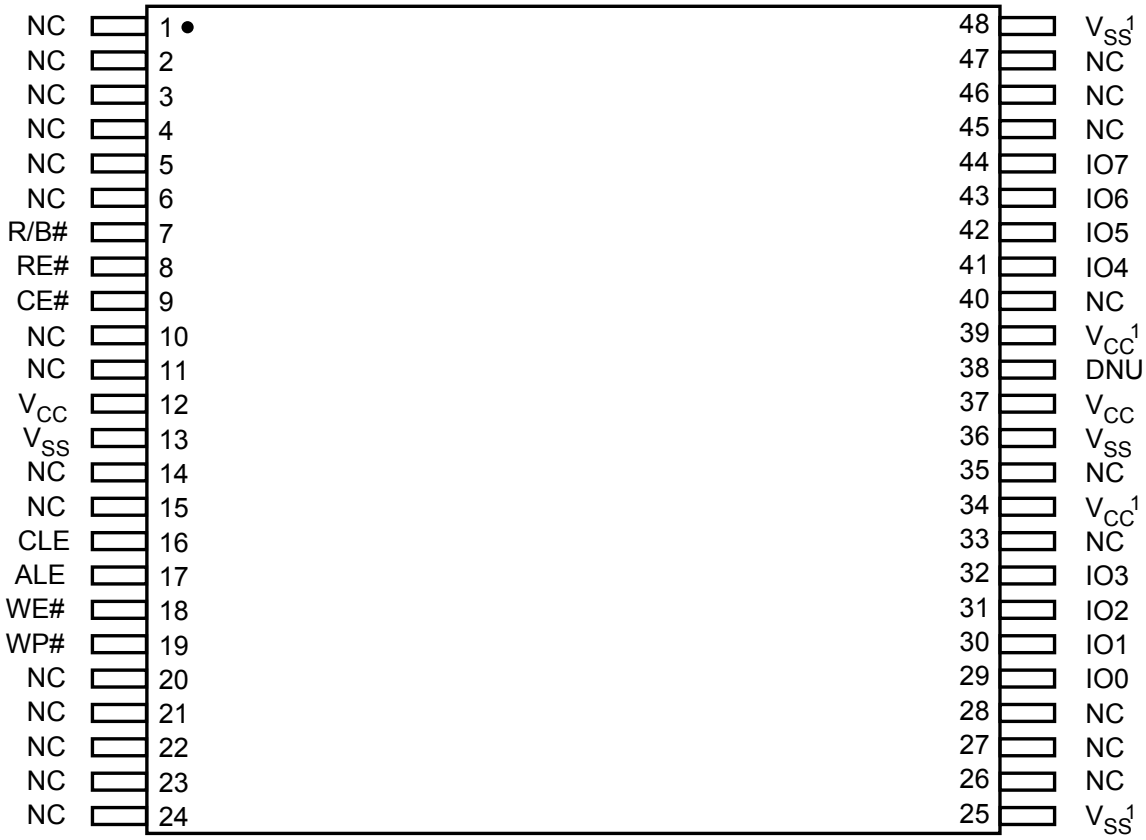

Note 1. *These pins might not be connected internally. However, it is recommended to connect these pins to power(or ground) as designated for ONFI compatibility.*

63-ball 9mmx11mm VFBGA

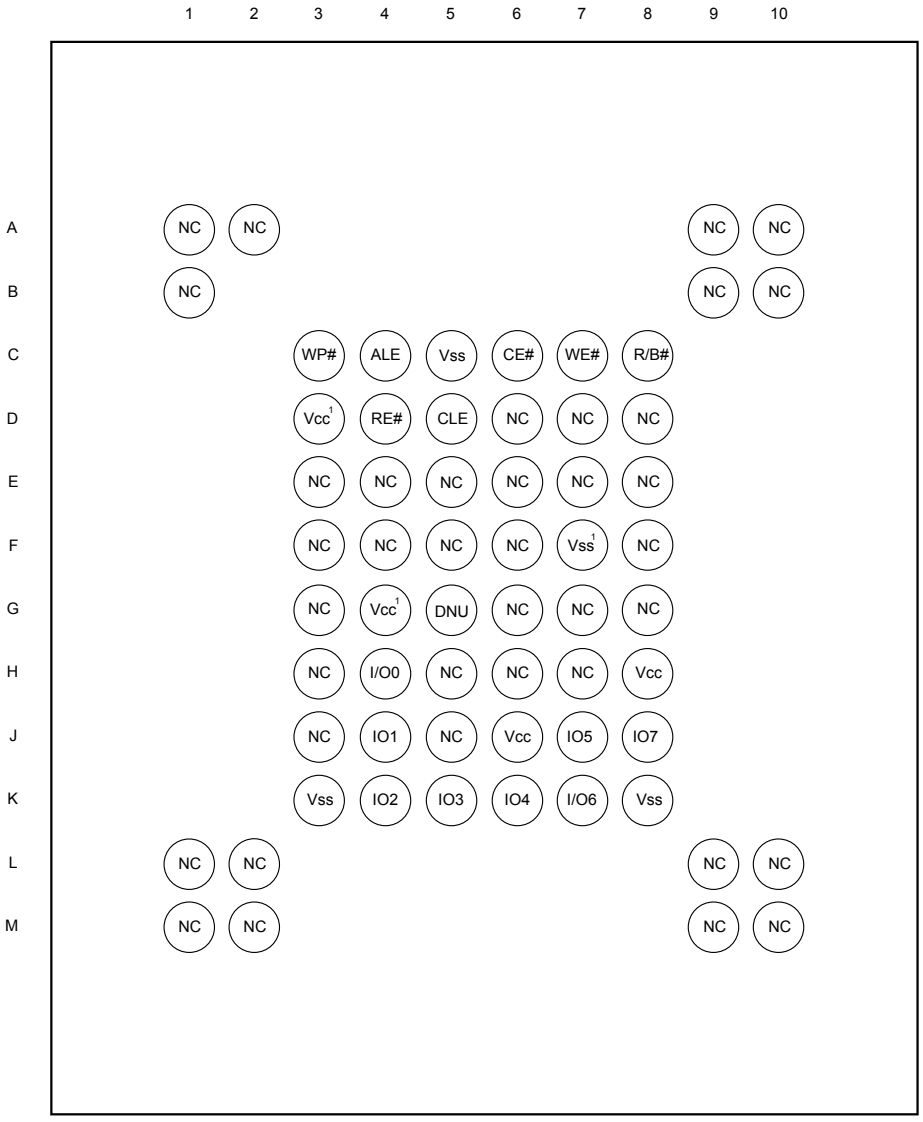

Note 1. *These pins might not be connected internally; however, it is recommended to connect these pins to power (or ground) as designated for ONFI compatibility.*

3-1. PIN DESCRIPTIONS

SYMBOL	PIN NAME
IO7 - IO0	Data I/O port
CE#	Chip Enable (Active Low)
RE#	Read Enable (Active Low)
WE#	Write Enable (Active Low)
CLE	Command Latch Enable
ALE	Address Latch Enable
WP#	Write Protect (Active Low)
R/B#	Ready/Busy (Open Drain)
VSS	Ground
VCC	Power Supply for Device Operation
NC	Not Connected Internally
DNU	Do Not Use (Do Not Connect)

PIN FUNCTIONS

The MX60LF8G18AC device is a sequential access memory that utilizes multiplexing input of Command/Address/Data.

I/O PORT: IO7 - IO0

The IO7 to IO0 pins are for address/command input and data output to/from the device.

CHIP ENABLE: CE#

The device goes into low-power Standby Mode when CE# goes high during a read operation and not at busy stage.

The CE# goes low to enable the device to be ready for standard operation. When the CE# goes high, the device is deselected. However, when the device is at busy stage, the device will not go to standby mode when CE# pin goes high.

READ ENABLE: RE#

The RE# (Read Enable) allows the data to be output by a tREA time after the falling edge of RE#. The internal address counter is automatically increased by one at the falling edge of RE#.

WRITE ENABLE: WE#

When the WE# goes low, the address/data/command are latched at the rising edge of WE#.

COMMAND LATCH ENABLE: CLE

The CLE controls the command input. When the CLE goes high, the command data is latched at the rising edge of the WE#.

ADDRESS LATCH ENABLE: ALE

The ALE controls the address input. When the ALE goes high, the address is latched at the rising edge of WE#.

WRITE PROTECT: WP#

The WP# signal keeps low and then the memory will not accept the program/erase operation. It is recommended to keep WP# pin low during power on/off sequence. Please refer to the waveform of "Power On/Off Sequence".

READY/Busy: R/B#

The R/B# is an open-drain output pin. The R/B# outputs the ready/busy status of read/program/erase operation of the device. When the R/B# is at low, the device is busy for read or program or erase operation. When the R/B# is at high, the read/program/erase operation is finished.

Please refer to **Section 9-1** for details.

4. BLOCK DIAGRAM

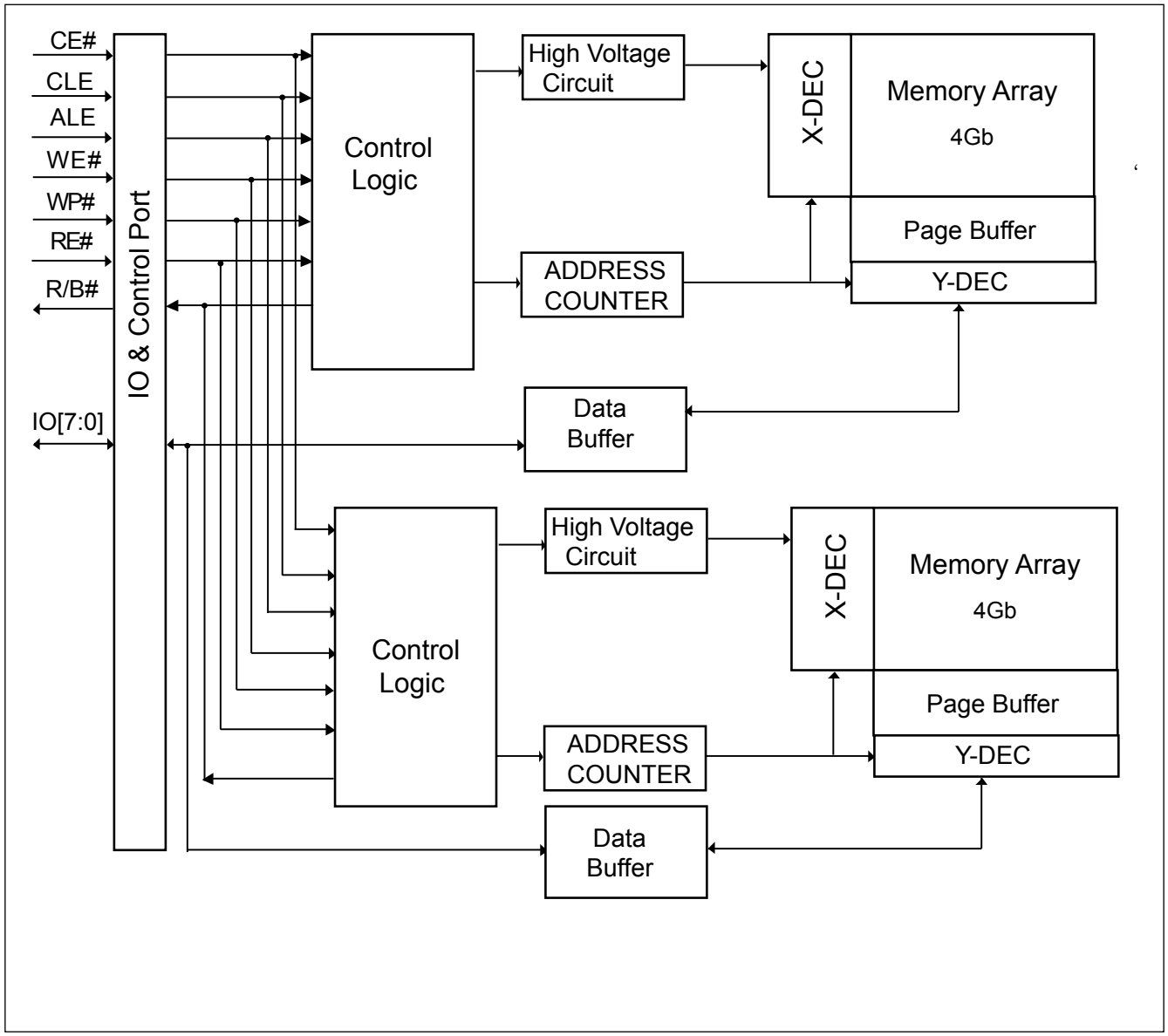

5. SCHEMATIC CELL LAYOUT AND ADDRESS ASSIGNMENT

MX60LF8G18AC NAND device is stacked by two 4Gb die and each die is divided into two planes, which is composed by 64 pages of (2,048+64)-byte in two NAND strings structure with 32 serial connected cells in each string. Each page has an additional 64 bytes for ECC and other purposes. The device has an on-chip buffer of 2,112 bytes for data load and access. Each 2K-Byte page has the two area, one is the main area which is 2048-bytes and the other is spare area which is 64-byte.

There are five address cycles for the address allocation, please refer to the table below.

Table 1-1. Address Allocation

Addresses	IO7	IO6	IO5	IO4	IO3	IO2	IO1	IO0
Column address - 1st cycle	A7	A6	A5	A4	A3	A2	A1	A0
Column address - 2nd cycle	L	L	L	L	A11	A10	A9	A8
Row address - 3rd cycle	A19	A18[1]	A17	A16	A15	A14	A13	A12
Row address - 4th cycle	A27	A26	A25	A24	A23	A22	A21	A20
Row address - 5th cycle	L	L	L	L	L	A30[2]	A29	A28

Notes:

1. A18 is the plane selection.

2. A30 is the die selection. A30 = 0 is for bottom 4Gb, A30 = 1 for top 4Gb.

6. DEVICE OPERATIONS

6-1. Address Input/Command Input/Data Input

Address input bus operation is for address input to select the memory address. The command input bus operation is for giving command to the memory. The data input bus is for data input to the memory device.

Figure 2. AC Waveforms for Command / Address / Data Latch Timing

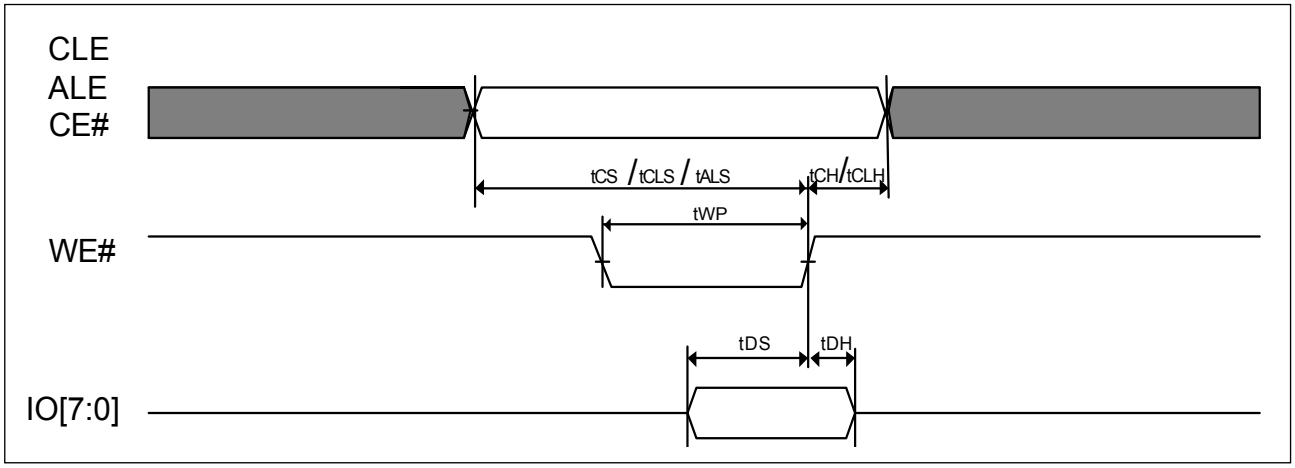

Figure 3. AC Waveforms for Address Input Cycle

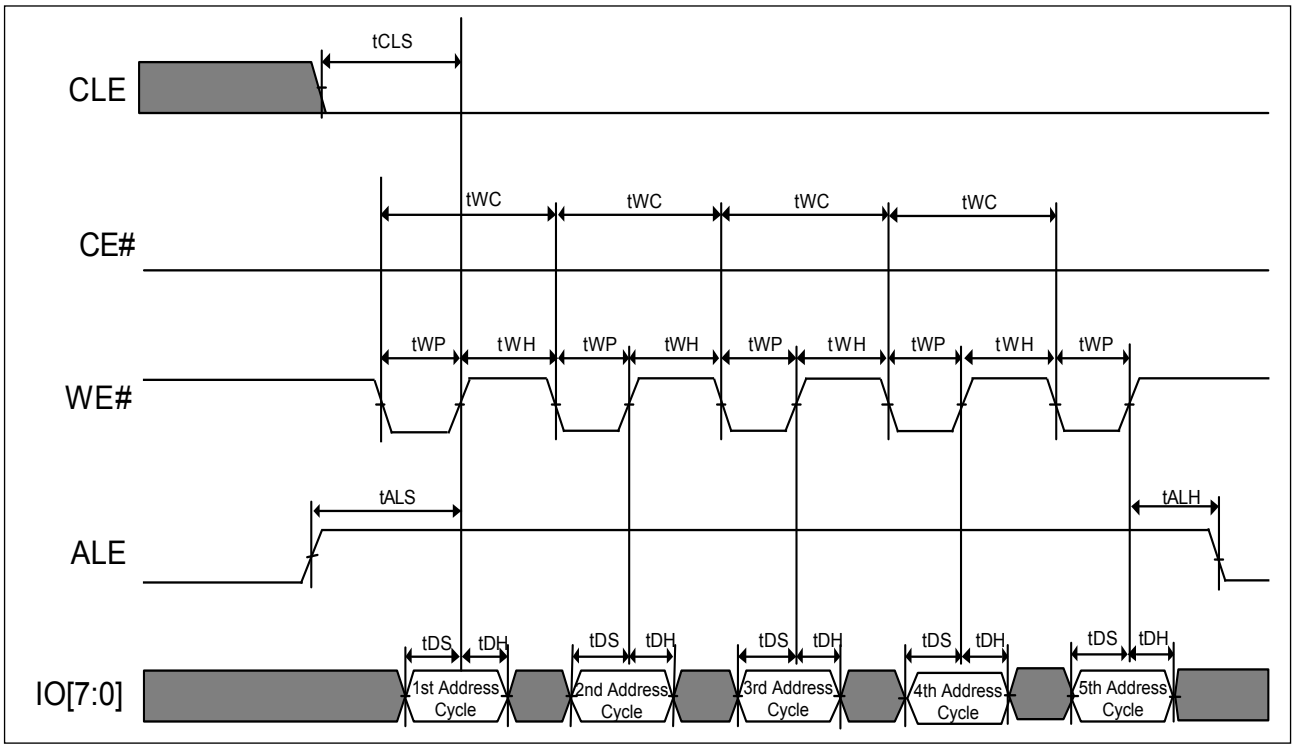

Figure 4. AC Waveforms for Command Input Cycle

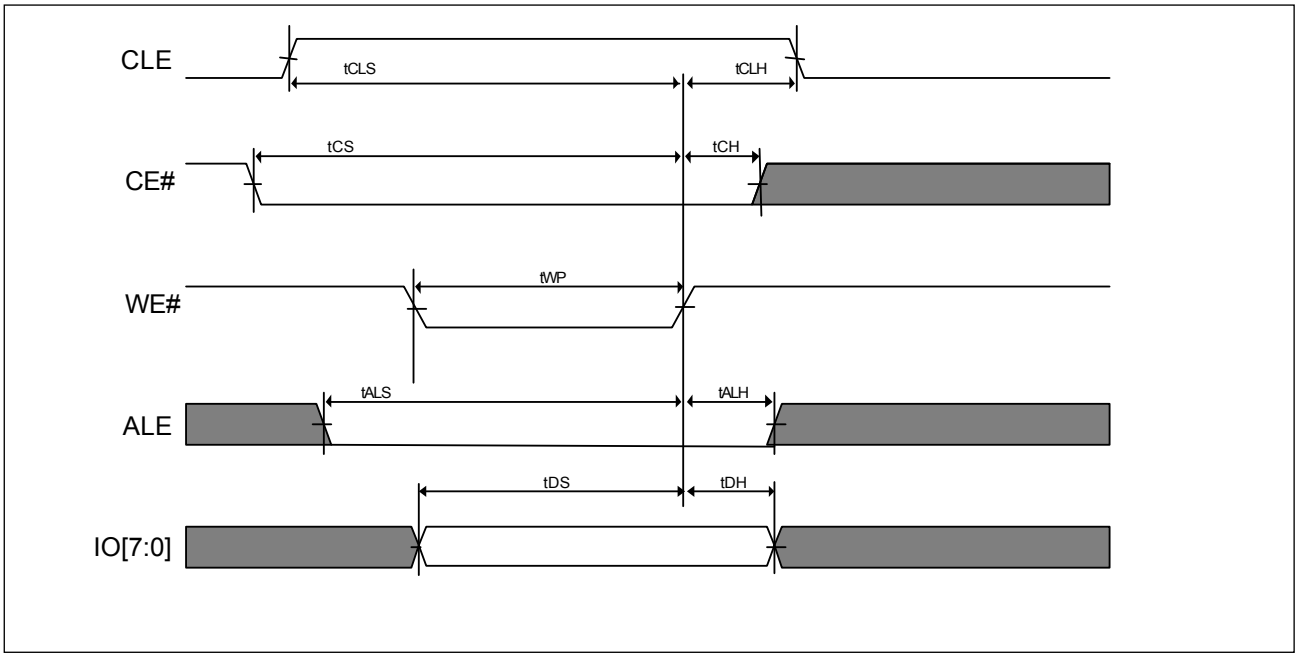

Figure 5. AC Waveforms for Data Input Cycle

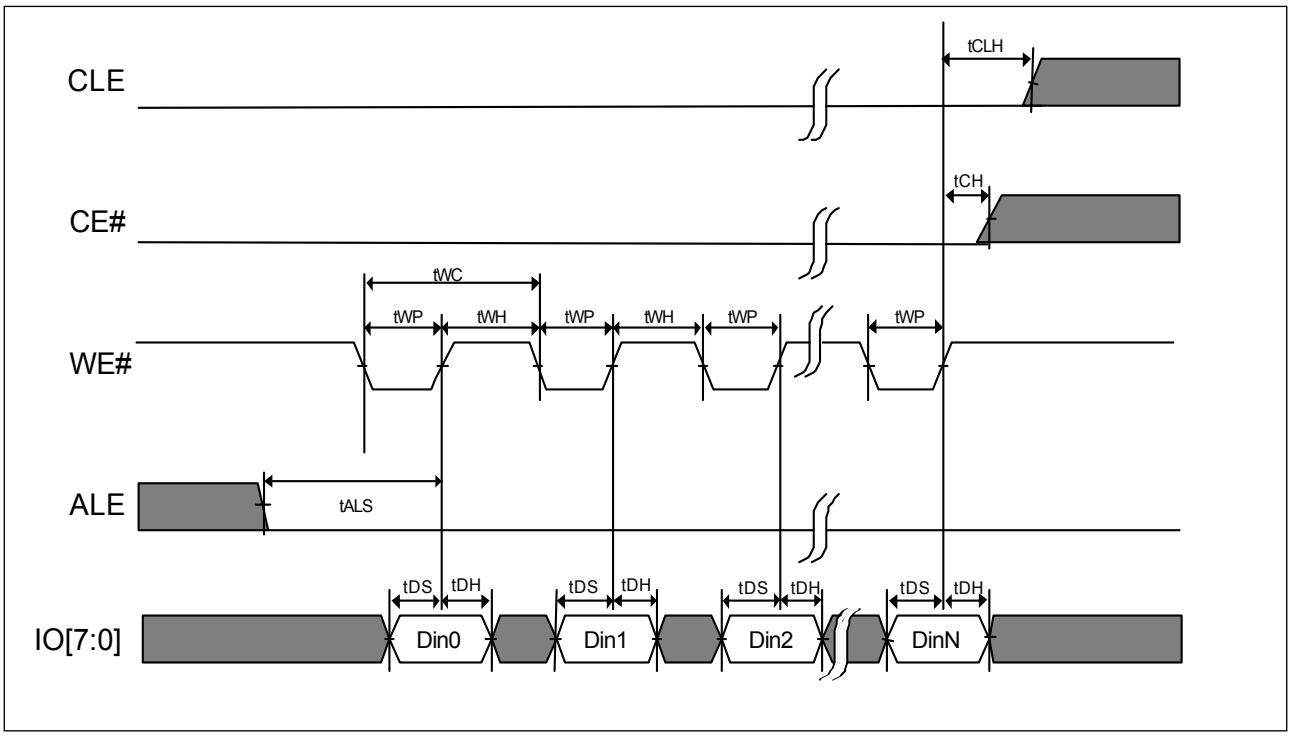

6-2. Page Read

The MX60LF8G18AC array is accessed in Page of 2,112 bytes. External reads begins after the R/B# pin goes to READY.

The Read operation may also be initiated by writing the 00h command and giving the address (column and row address) and being confirmed by the 30h command, the MX60LF8G18AC begins the internal read operation and the chip enters busy state. The data can be read out in sequence after the chip is ready. Refer to the waveform for Read Operation as below.

If the host side uses a sequential access time (tRC) of less than 30ns, the data can be latched on the next falling edge of RE# as the waveform of EDO mode (**Figure 9-2**).

To access the data in the same page randomly, a command of 05h may be written and only column address following and then confirmed by E0h command.

Figure 6. AC Waveforms for Read Cycle

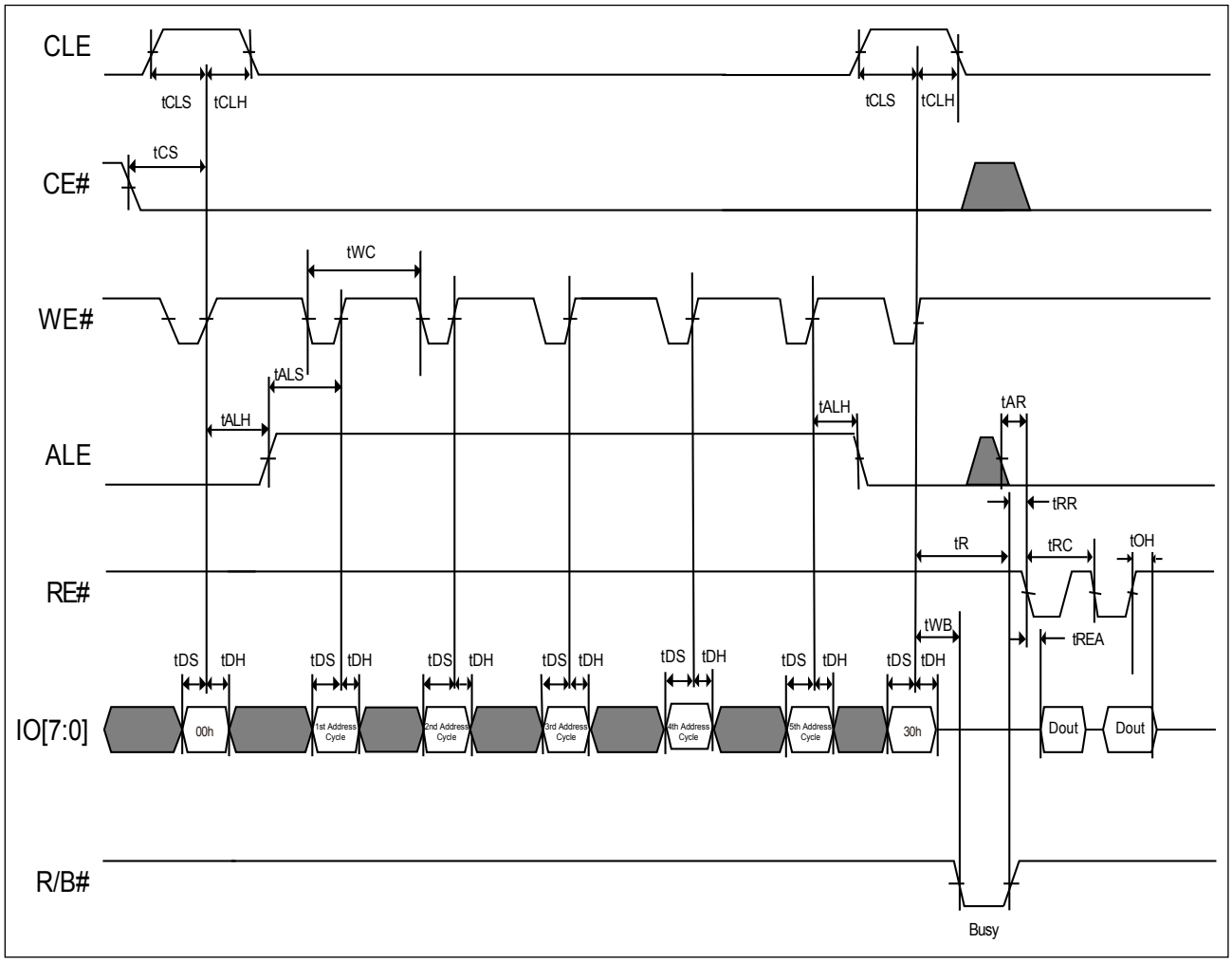

Figure 7. AC Waveforms for Read Operation (Intercepted by CE#)

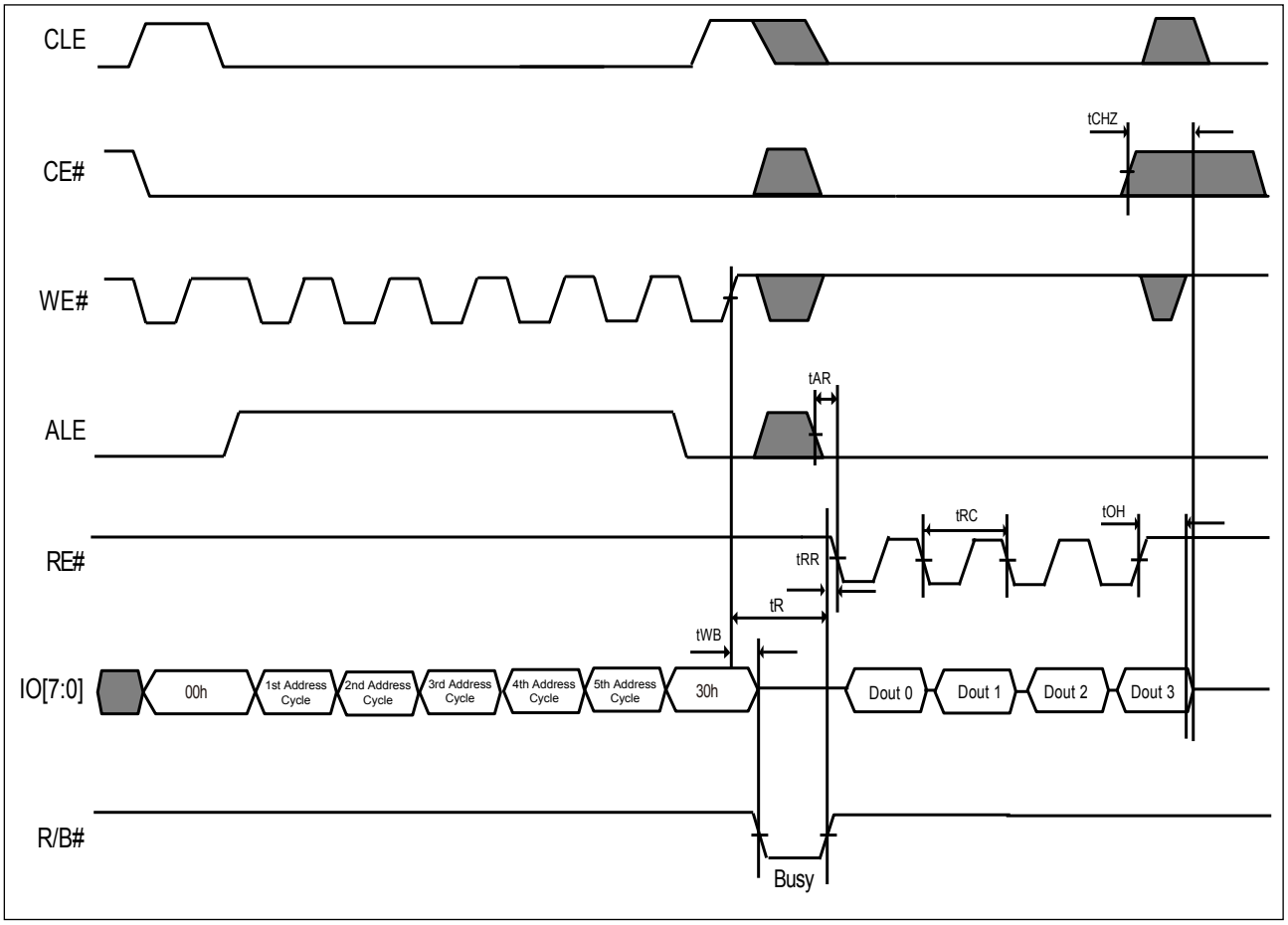

Figure 8. AC Waveforms for Read Operation (with CE# Don't Care)

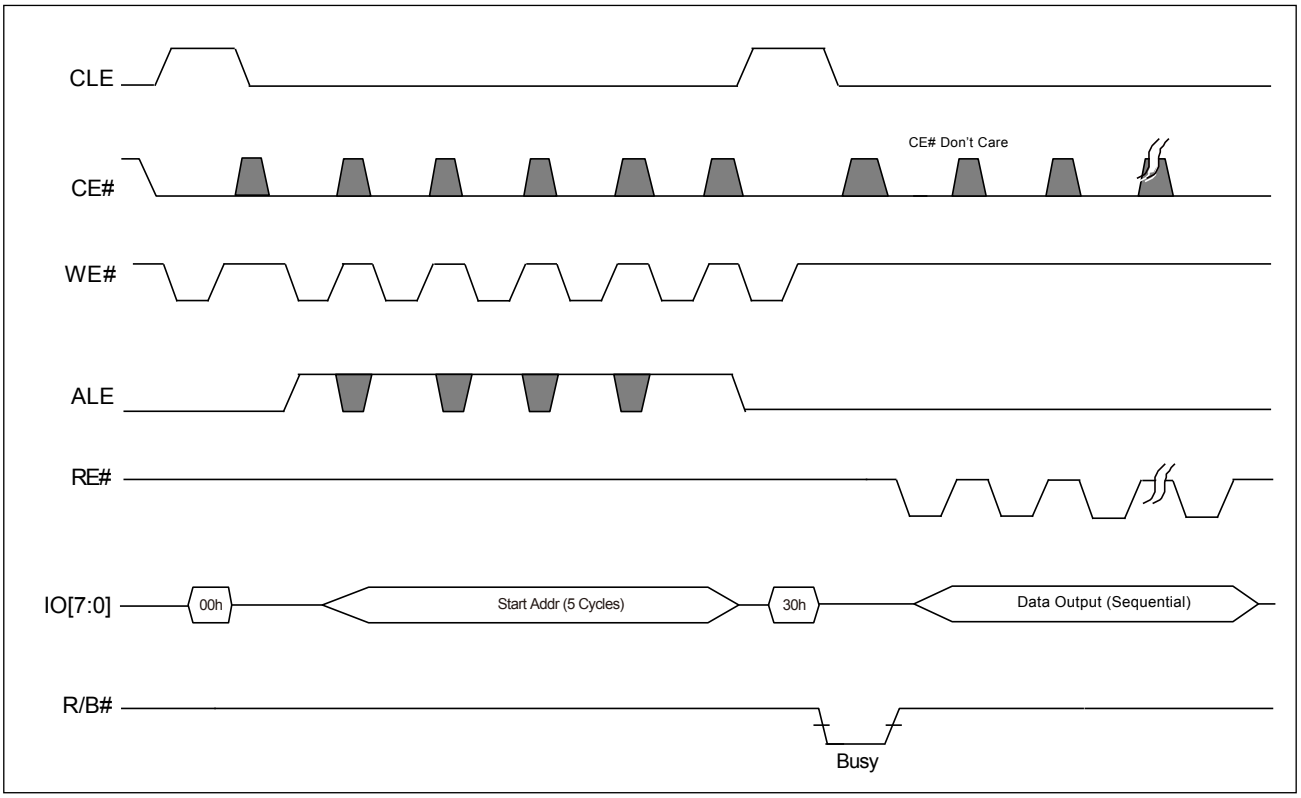

Note: *The CE# "Don't Care" feature may simplify the system interface, which allows controller to directly download the code from flash device, and the CE# transitions will not stop the read operation during the latency time.*

Figure 9-1. AC Waveforms for Sequential Data Out Cycle (After Read)

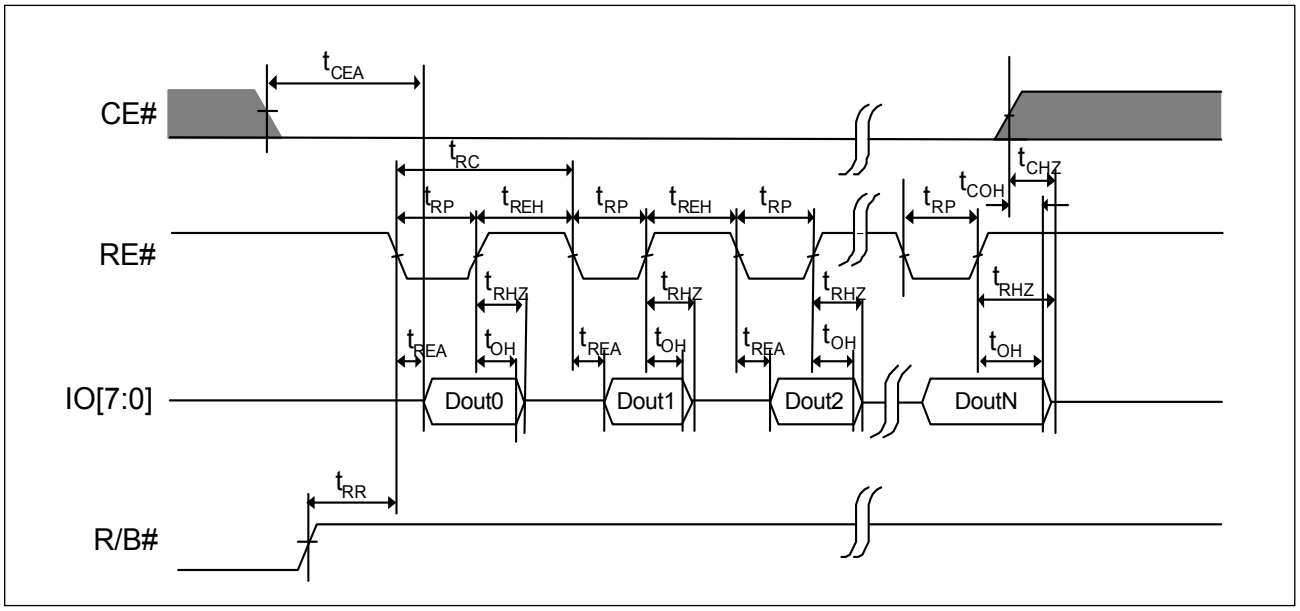

Figure 9-2. AC Waveforms for Sequential Data Out Cycle (After Read) - EDO Mode

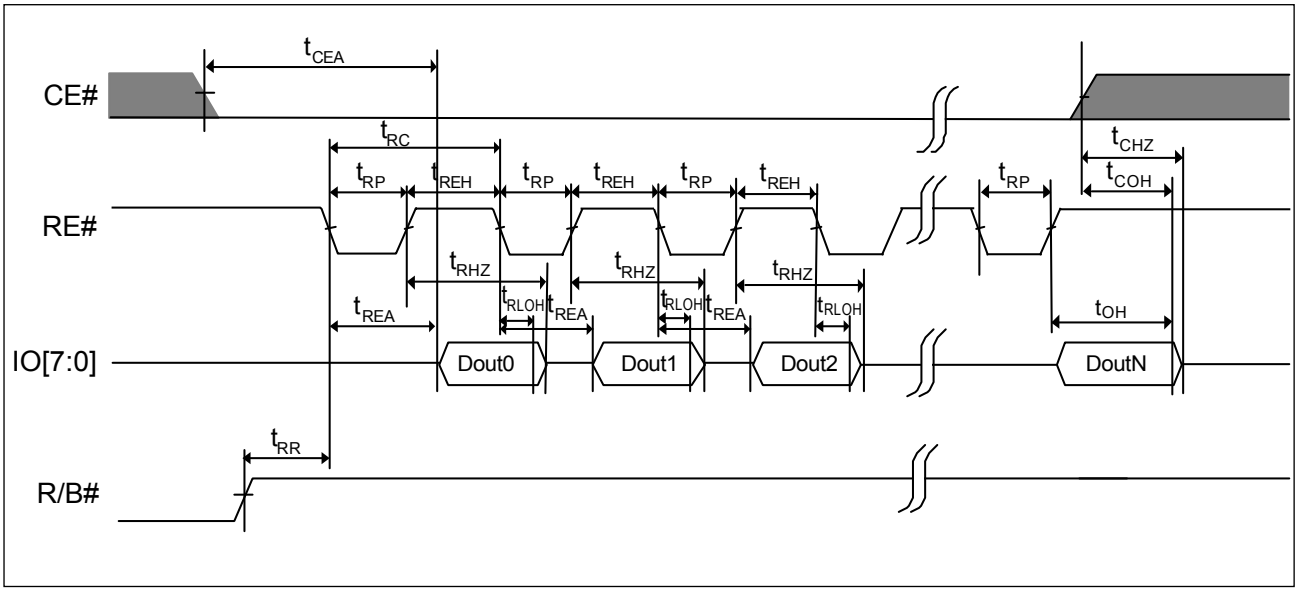

Figure 10. AC Waveforms for Random Data Output

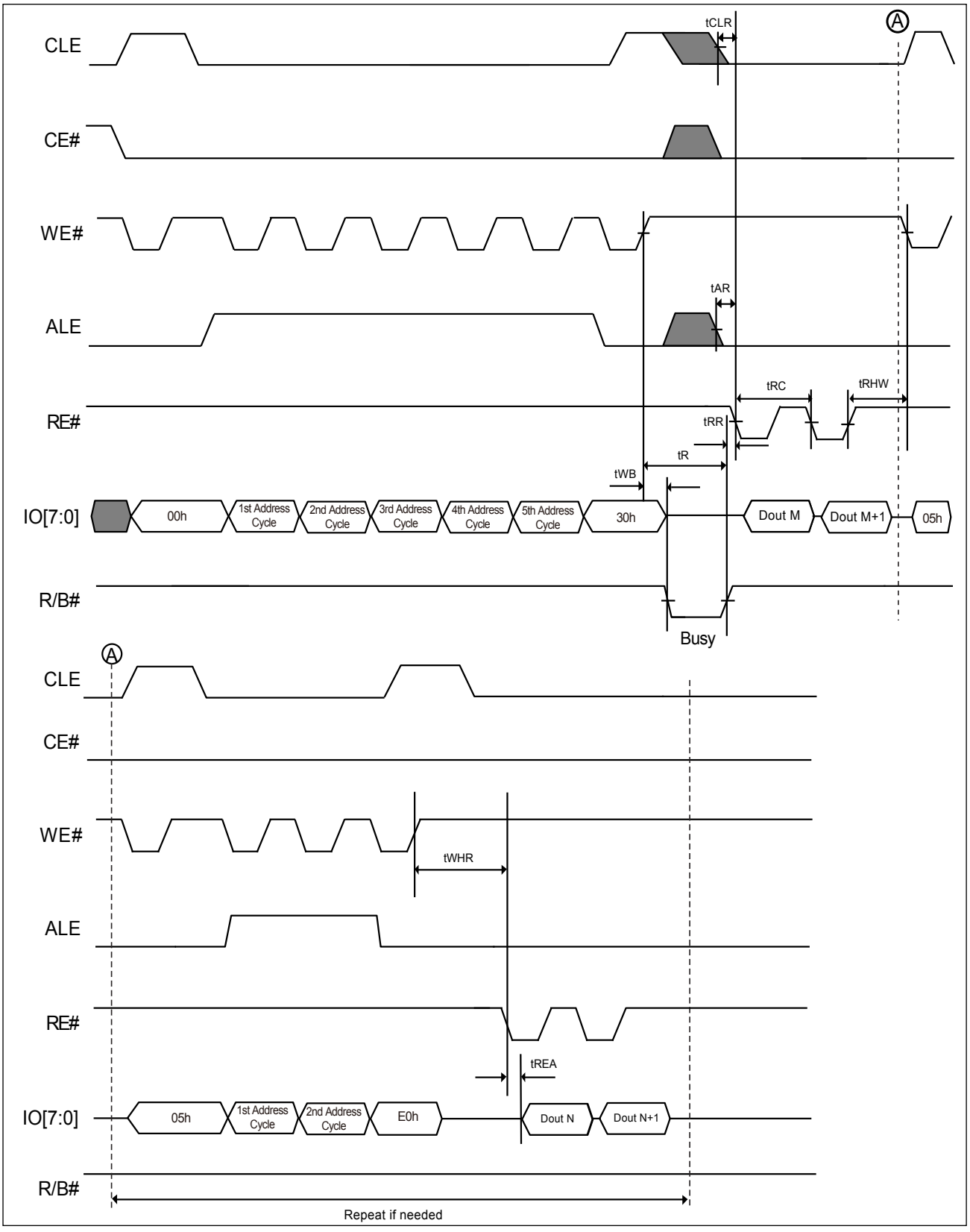

6-3. Cache Read Sequential

The cache read sequential operation is for throughput enhancement by using the internal cache buffer. It allows the consecutive pages to be read-out without giving next page address, which reduces the latency time from tR to tRCBSY between pages or blocks. While the data is read out on one page, the data of next page can be read into the cache buffer.

After writing the 00h command, the column and row address should be given for the start page selection, and followed by the 30h command for address confirmation. After that, the CACHE READ operation starts after a latency time tR and following a 31h command with the latency time of tRCBSY, the data can be read-out sequentially from 1st column address (A[11:0]=00h) without giving next page address input. The 31h command is necessary to confirm the next cache read sequential operation and followed by a tRCBSY latency time before next page data is necessary. The CACHE READ SEQUENTIAL command is also valid for the consecutive page cross block.

The random data out (05h-E0h) command set is available to change the column address of the current page data in the cache register.

The user can check the chip status by the following method:

- R/B# pin ("0" means the data is not ready, "1" means the user can read the data)

- Status Register (SR[6] functions the same as R/B# pin, SR[5] indicates the internal chip operation, "0" means the chip is in internal operation and "1" means the chip is idle.) Status Register can be checked after the Read Status command (70h) is issued. Command 00h should be given to return to the cache read sequential operation.

To confirm the last page to be read-out during the cache read sequential operation, a 3Fh command is needed to replace the 31h command prior to the last data-out.

When the cache read operation is applied to the die boundary, there is a restriction - the 31h (cache read sequential) command should not be issue to cross the die boundary. However, the 3Fh (cache read end) command is accepted on the die boundary.

Figure 11-1. AC Waveforms for Cache Read Sequential

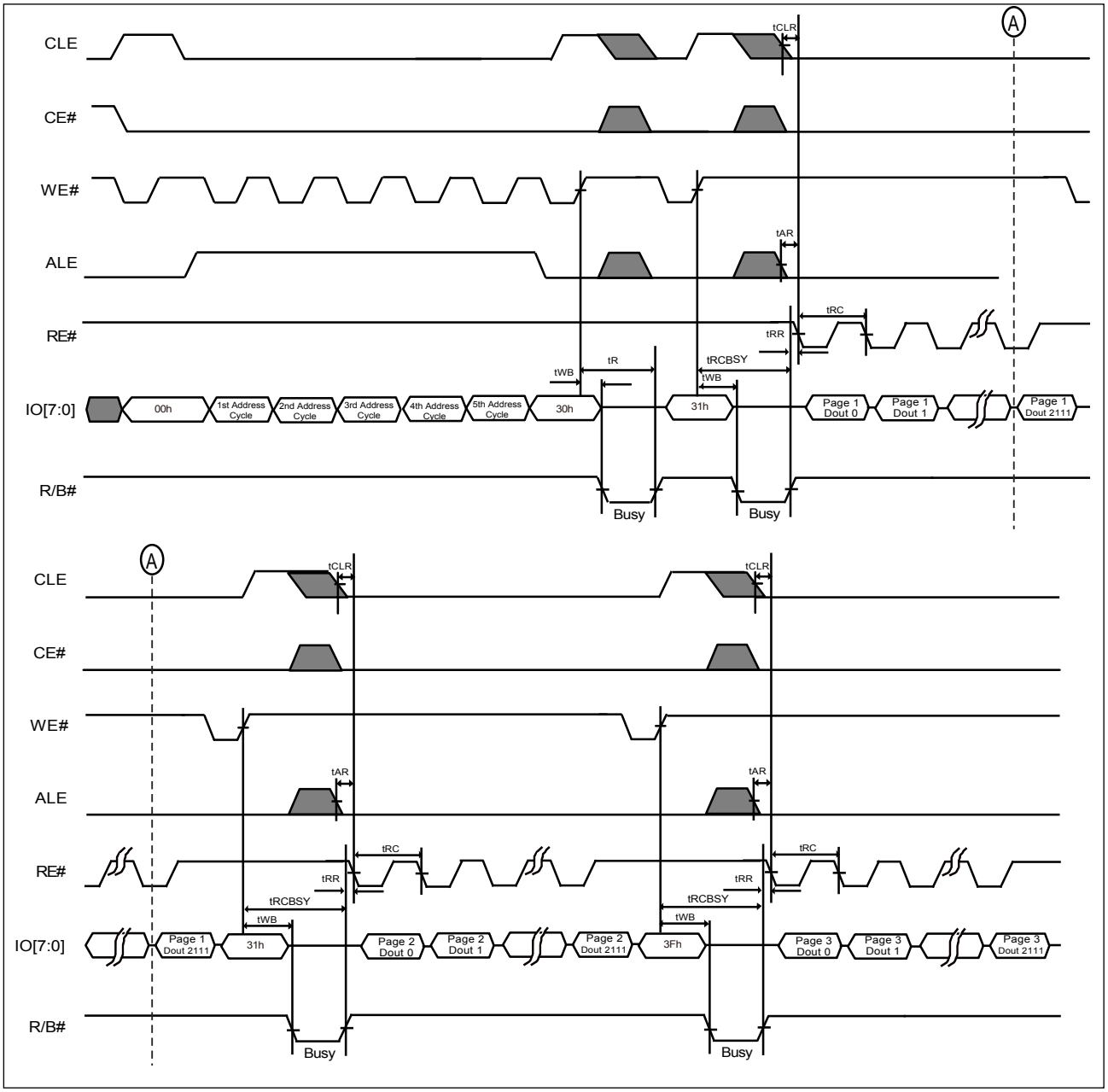

6-4. Cache Read Random

The main difference from the Cache Read Sequential operation is the Cache Read Random operation may allow the random page to be read-out with cache operation not just for the consecutive page only.

After writing the 00h command, the column and row address should be given for the start page selection, and followed by the 30h command for address confirmation. The column address is ignored in the cache read random operation. And then, the CACHE READ RANDOM operation starts after a latency time tR and following a 00h command with the selected page address and following a 31h command, the data can be read-out after the latency time of tRCBSY. After the previous selected page data out, a new selected page address can be given by writing the 00h-31h command set again. The CACHE READ RANDOM command is also valid for the consecutive page cross block.

The random data out (05h-E0h) command set is available to change the column address of the current page data in the cache register.

The user can check the chip status by the following method:

- R/B# pin ("0" means the data is not ready, "1" means the user can read the data)

- Status Register can be checked after the Read Status command (70h) is issued. (SR[6] behaves the same as R/B# pin, SR[5] indicates the internal chip operation, "0" means the chip is in internal operation and "1" means the chip is idle.) Command 00h should be given to return to the cache read operation.

To confirm the last page to be read-out during the cache read operation, a 3Fh command is needed to replace the 31h command prior to the last data-out.

Figure 11-2. AC Waveforms for Cache Read Random

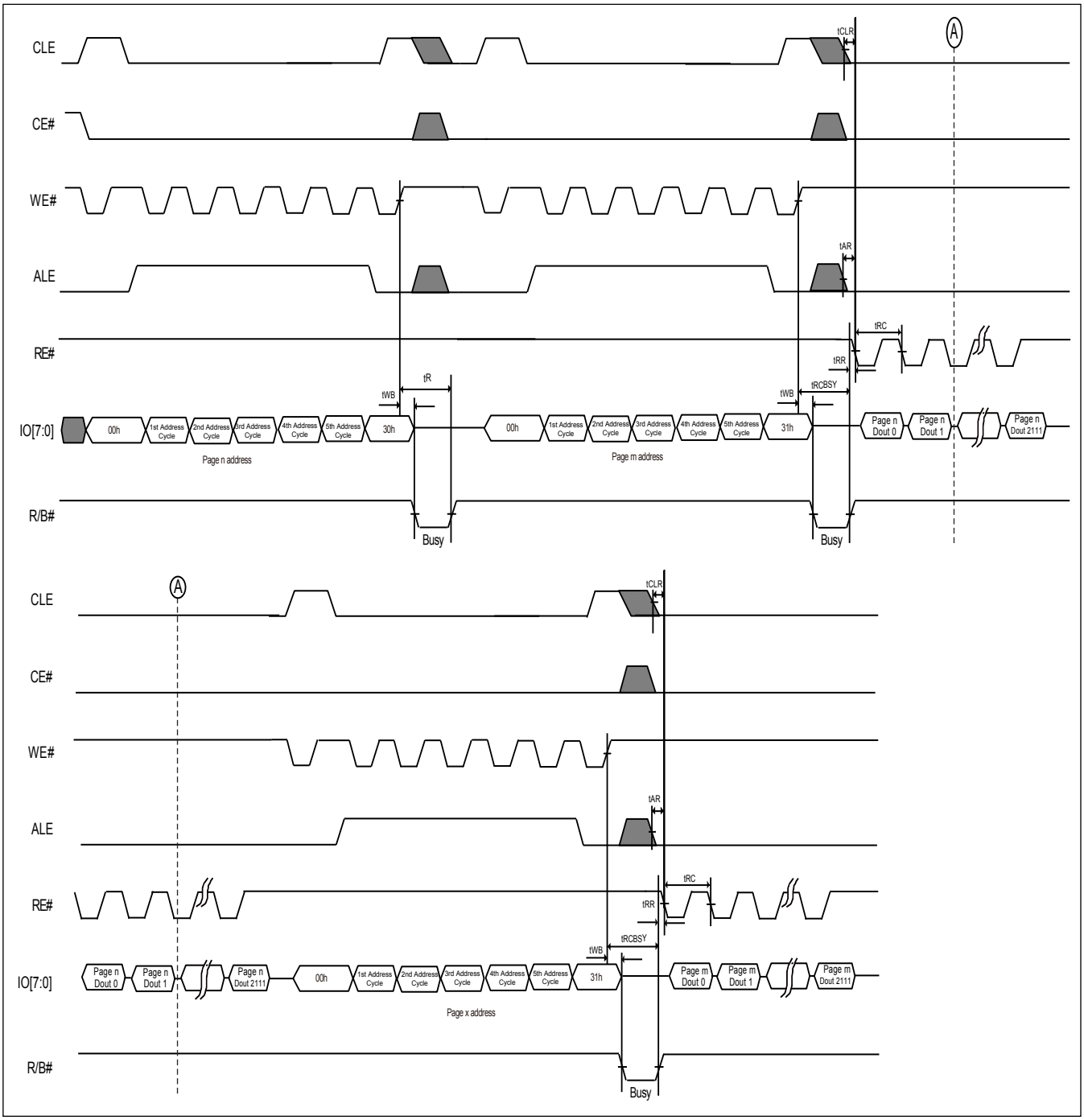

6-5. Page Program

The memory is programmed by page, which is 2,112 bytes. After Program load command (80h) is issued and the row and column address is given, the data will be loaded into the chip sequentially. Random Data Input command (85h) allows multi-data load in non-sequential address. After data load is complete, program confirm command (10h) is issued to start the page program operation. The page program operation in a block should start from the low address to high address. Partial program in a page is allowed up to 4 times. However, the random data input mode for programming a page is allowed and number of times is not limited.

The status of the program completion can be detected by R/B# pin or Status register bit SR[6].

The program result is shown in the chip status bit (SR[0]). SR[0] = 1 indicates the Page Program is not successful and SR[0] = 0 means the program operation is successful.

During the Page Program progressing, only the read status register command and reset command are accepted, others are ignored.

Figure 12. AC Waveforms for Program Operation after Command 80H

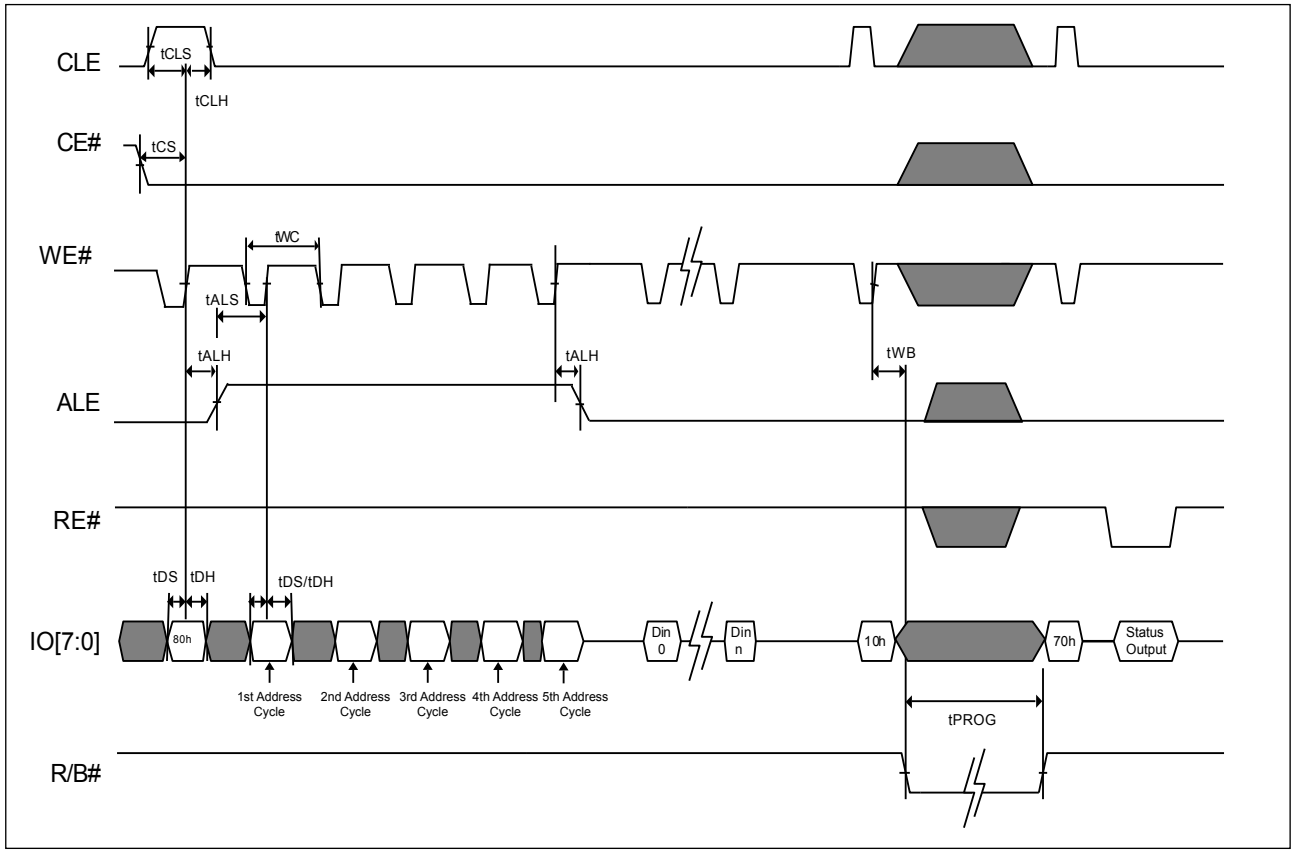

Figure 13. AC Waveforms for Random Data In (For Page Program)

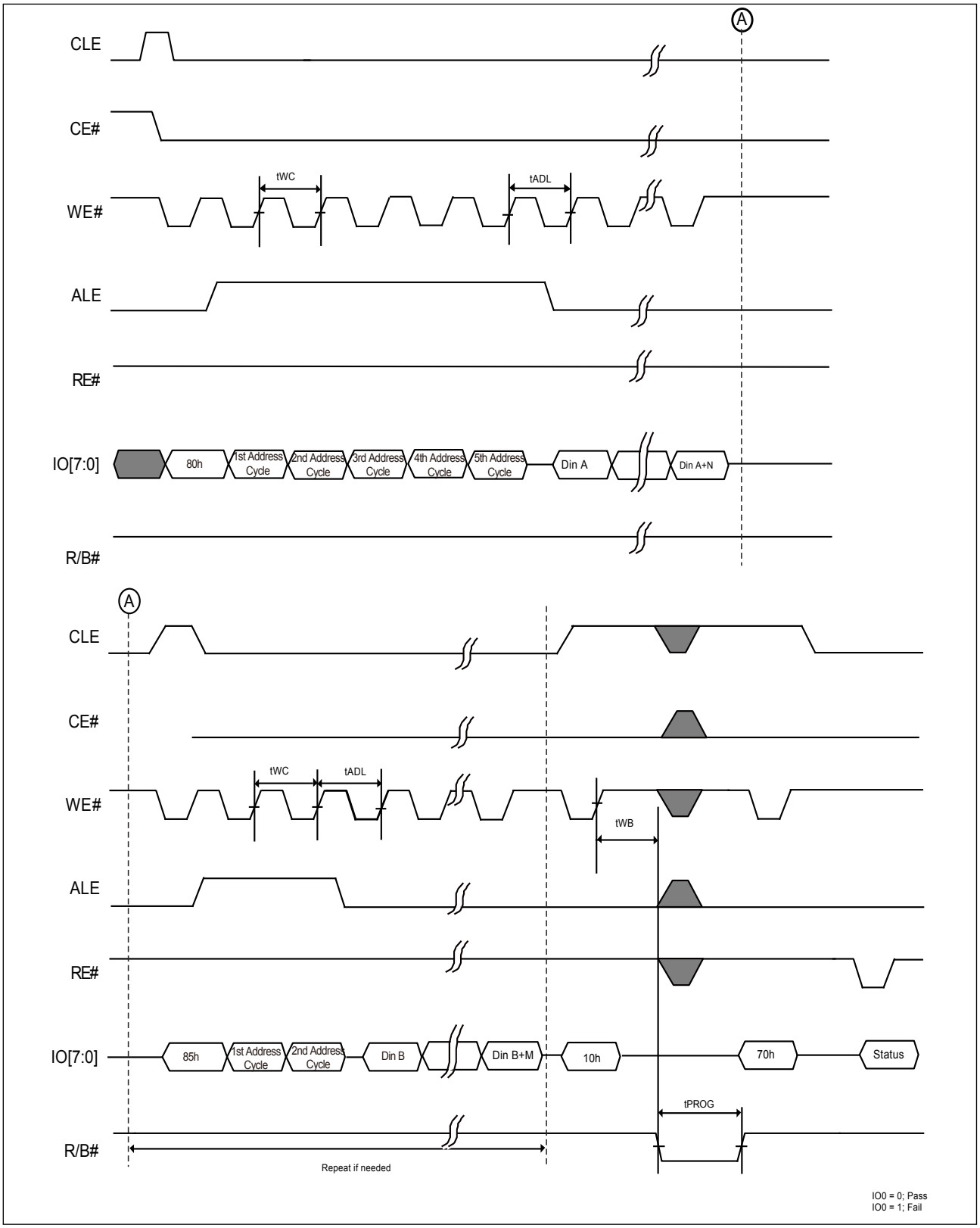

Note: *Random Data In is also supported in cache program.*

Figure 14. AC Waveforms for Program Operation with CE# Don't Care

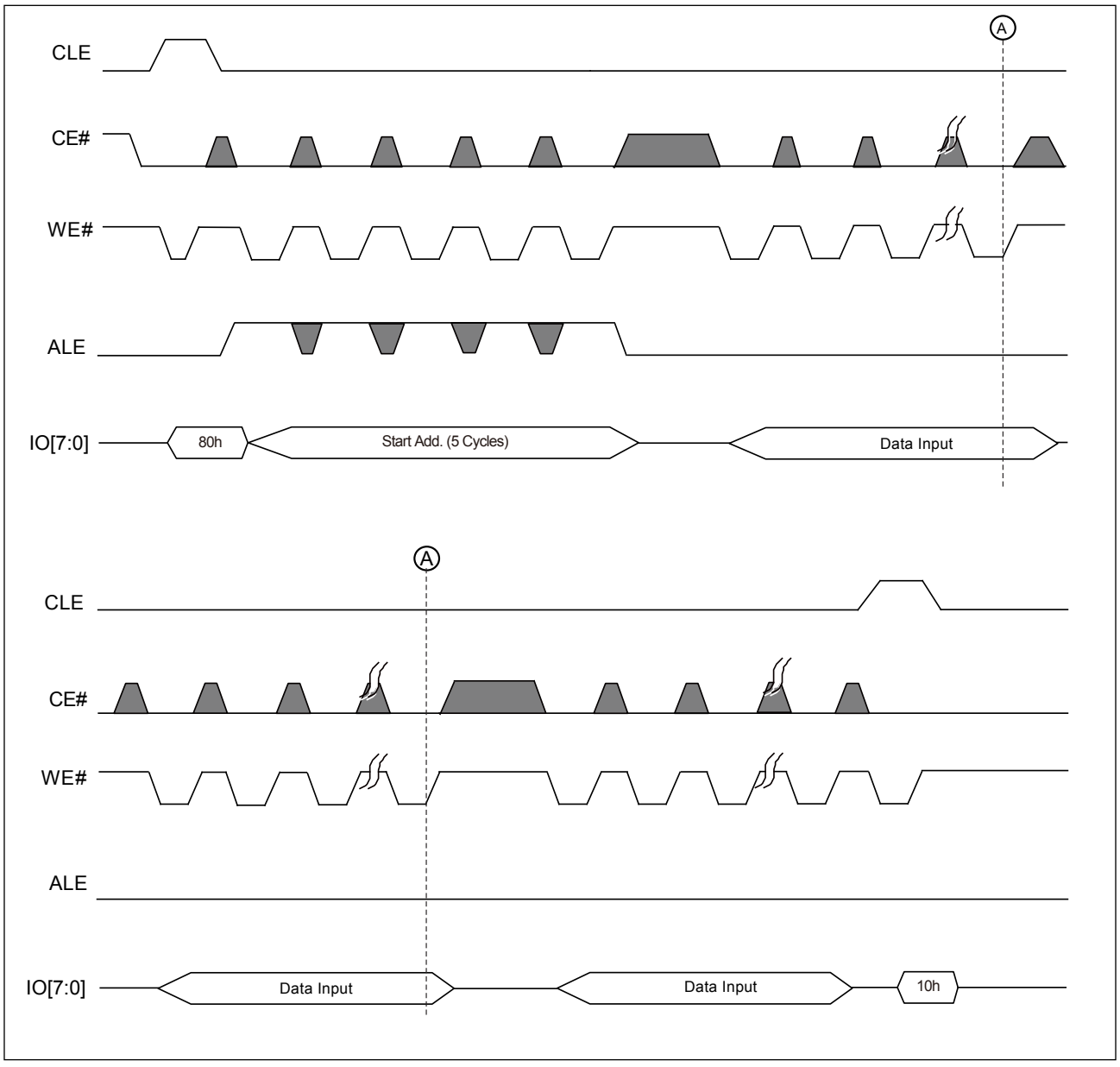

Note: *The CE# "Don't Care" feature may simplify the system interface, which allows the controller to directly write data into flash device, and the CE# transitions will not stop the program operation during the latency time.*

6-6. Cache Program

The cache program feature enhances the program performance by using the cache buffer of 2,112-byte. The serial data can be input to the cache buffer while the previous data stored in the buffer are programming into the memory cell. Cache Program command sequence is almost the same as page program command sequence. Only the Program Confirm command (10h) is replaced by cache Program command (15h).

After the Cache Program command (15h) is issued. The user can check the status by the following methods.

- R/B# pin

- Cache Status Bit (SR[6] = 0 indicates the cache is busy; SR[6] = 1 means the cache is ready).

The user can issue another Cache Program Command Sequence after the Cache is ready. The user can always monitor the chip state with Ready/Busy Status Bit (SR[5]) by issuing the 70h or 78h command to read status. To use the Status Enhanced Read (78h) for reading each die status if the cross die cache program operation failed. The user can issues either program confirm command (10h) or cache program command (15h) for the last page if the user monitor the chip status by issuing Read Status Command (70h).

However, if the user only monitors the R/B# pin, the user needs to issue the program confirm command (10h) for the last page.

The user can check the Pass/Fail Status through P/F Status Bit (SR[0]) and Cache P/F Status Bit (SR[1]). SR[1] represents Pass/Fail Status of the previous page. SR[1] is updated when SR[6] change from 0 to 1 or Chip is ready. SR[0] shows the Pass/Fail status of the current page. It is updated when SR[5] change from "0" to "1" or the end of the internal programming. For more details, please refer to the related waveforms.

Figure 15-1. AC Waveforms for Cache Program

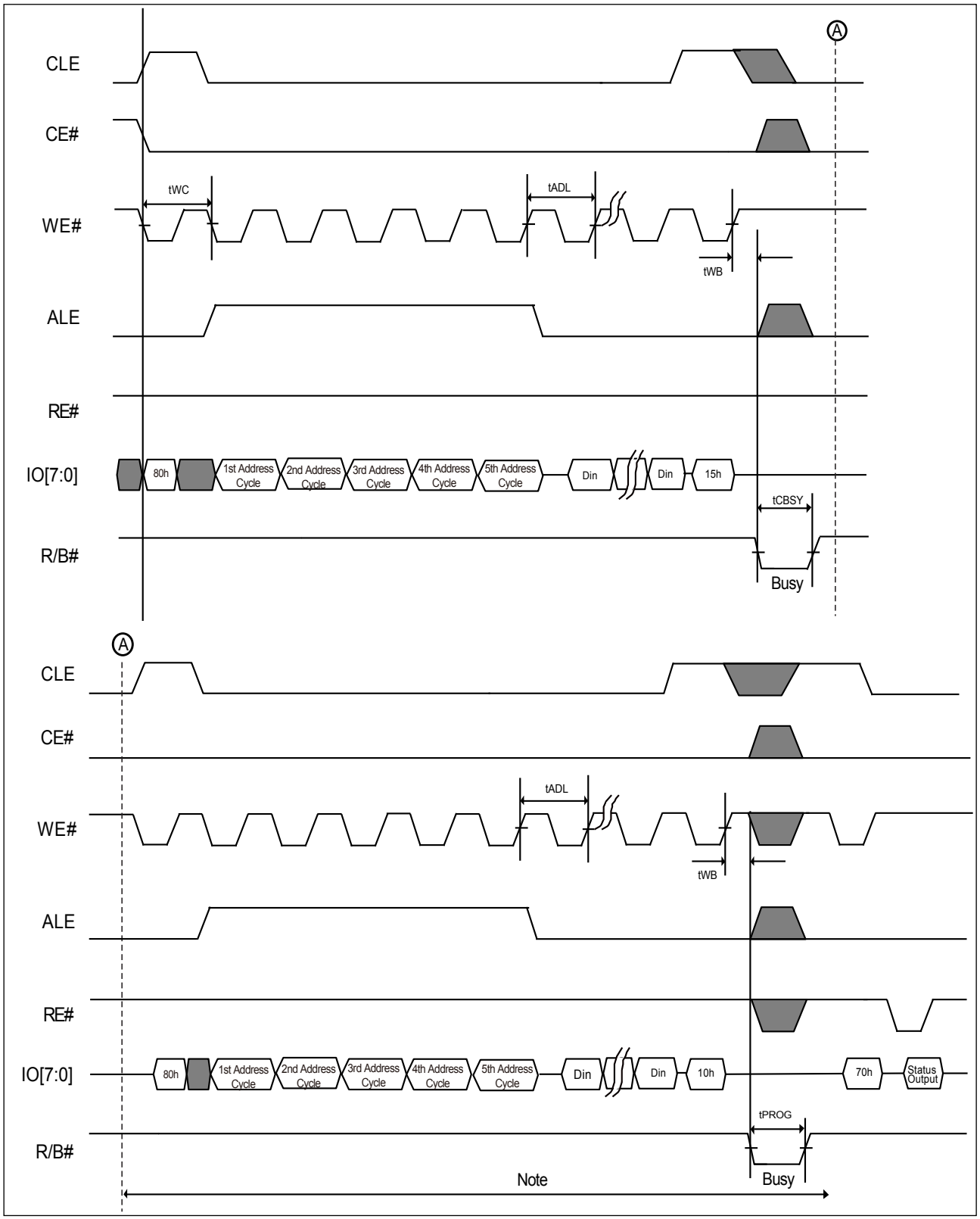

Note: *It indicates the last page Input & Program.*

Figure 15-2. AC Waveforms for Sequence of Cache Program

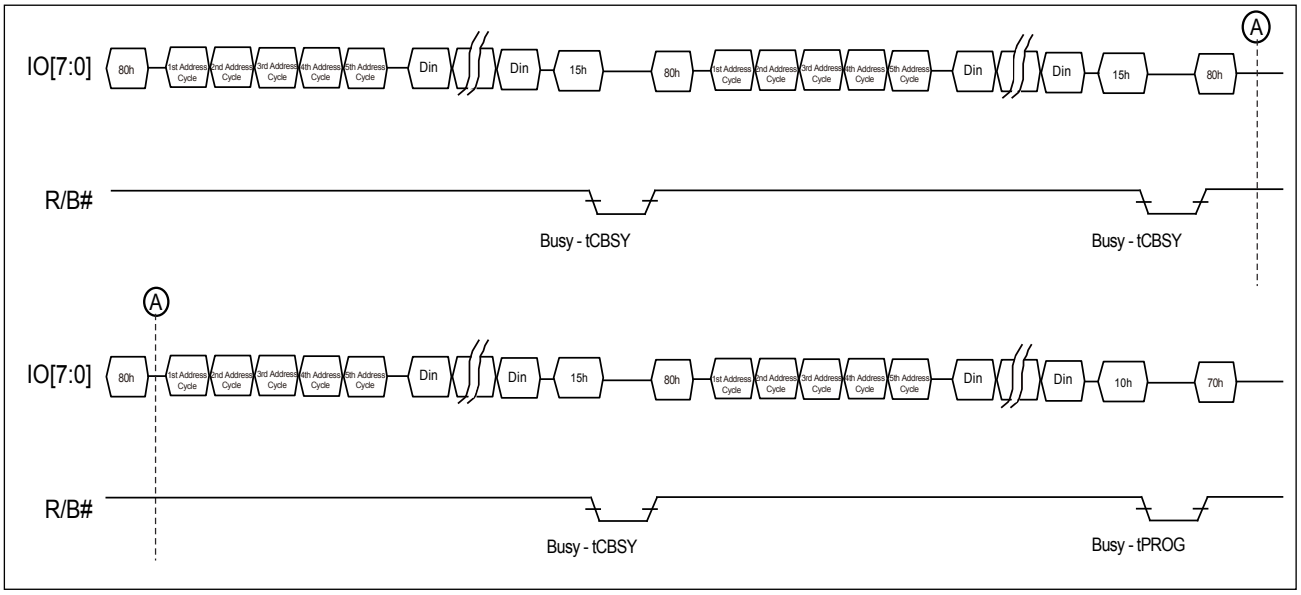

Note: *tPROG = Page($_{Last}$) programming time + Page ($_{Last-1}$) programming time - Input cycle time of command & address - Data loading time of page ($_{Last}$).*

6-7. Block Erase

The MX60LF8G18AC supports a block erase command. This command will erase a block of 64 pages associated with the most significant address bits.

The completion of the erase operation can be detected by R/B# pin or Status register bit (IO6). Recommend to check the status register bit IO0 after the erase operation completes.

During the erasing process, only the read status register command and reset command can be accepted, others are ignored.

Figure 16. AC Waveforms for Erase Operation

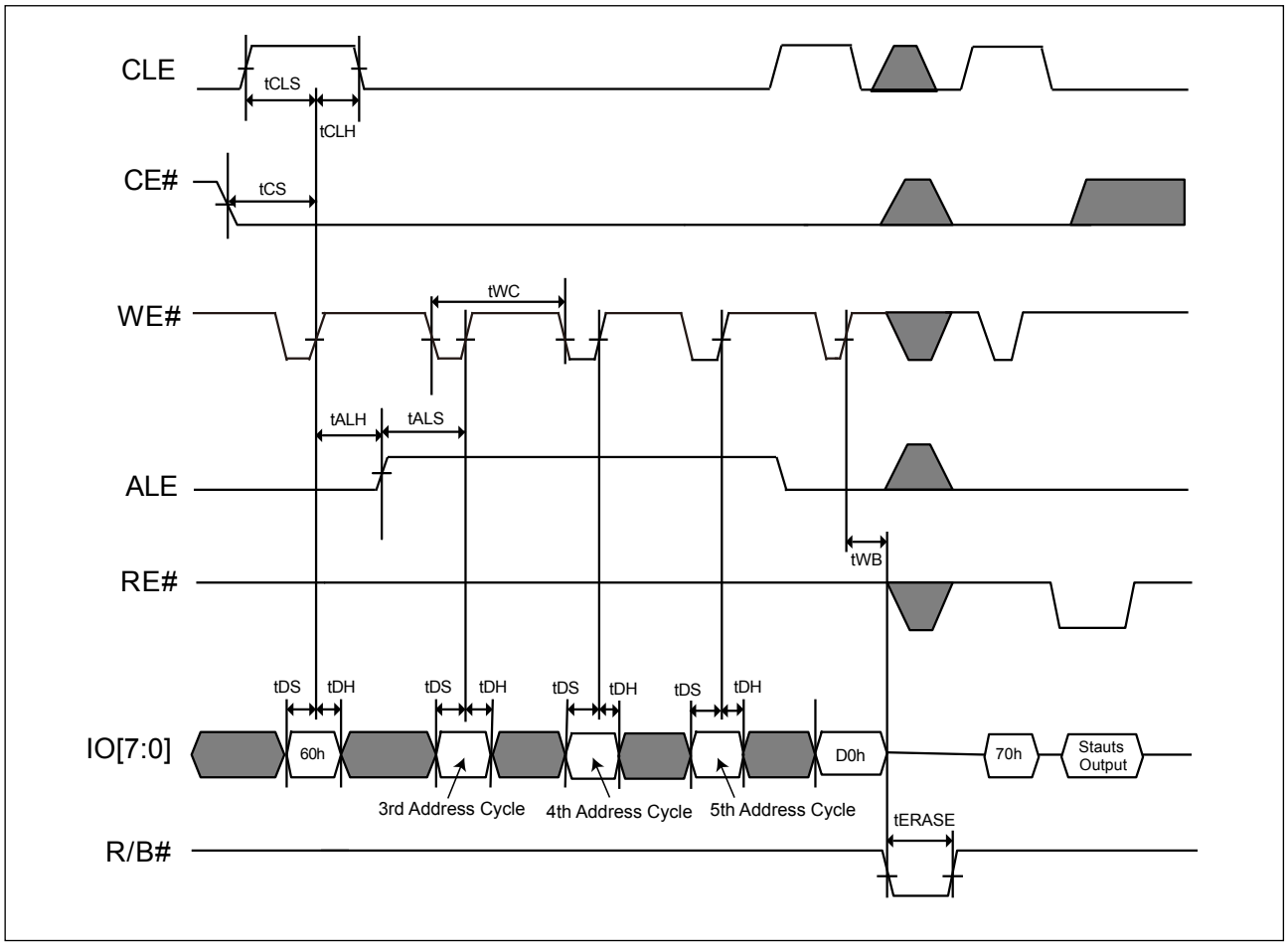

6-8. ID Read

The device contains ID codes that identify the device type and the manufacturer. This command is valid only when internal all die are ready.The ID READ command sequence includes one command Byte (90h), one address byte (00h). The Read ID command 90h may provide the manufacturer ID (C2h) of one-byte and device ID (D3h) of one-byte, also Byte2, Byte3, and Byte4 ID code are followed.

The device support ONFI Parameter Page Read, by sending the ID Read (90h) command and following one byte address (20h), the four-byte data returns the value of 4Fh-4Eh-46h-49h for the ASCII code of "O"-"N"-"F"-"I" to identify the ONFI parameter page.

Table 2. ID Codes Read Out by ID Read Command 90H

8Gb	8Gb, x8, 3V
Byte0-Manufacturer	C2h
Byte1: Device ID	D3h
Byte2	D1h
Byte3	95h
Byte4	5Ah

Table 3. The Definition of Byte2~Byte4 of ID Table

Terms	Description	IO7	IO6	IO5	IO4	IO3	IO2	IO1	IO0
Byte 2									
Die Number	1							0	0
	2							0	1
Cell Structure	SLC					0	0		
# of Concurrently Programmed page	1			0	0				
	2			0	1				
Interleaved Operations between Multiple Die	Supported		1						
Cache Program	Supported	1							
Byte 3									
Page size (Exclude spare)	2KB							0	1
Spare area size (Per 512B)	16B						1		
Block size (Exclude spare)	128KB			0	1				
Organization	x8		0						
Sequential Read Cycle Time	25ns	0				0			
	20ns	1				0			
Byte 4									
ECC level requirement	4-bit ECC/528B							1	0
#Plane per CE	1					0	0		
	2					0	1		
	4					1	0		
Plane size	1Gb		0	0	0				
	2Gb		1	0	1				
Reserved		0							

Figure 17-1. AC Waveforms for ID Read Operation

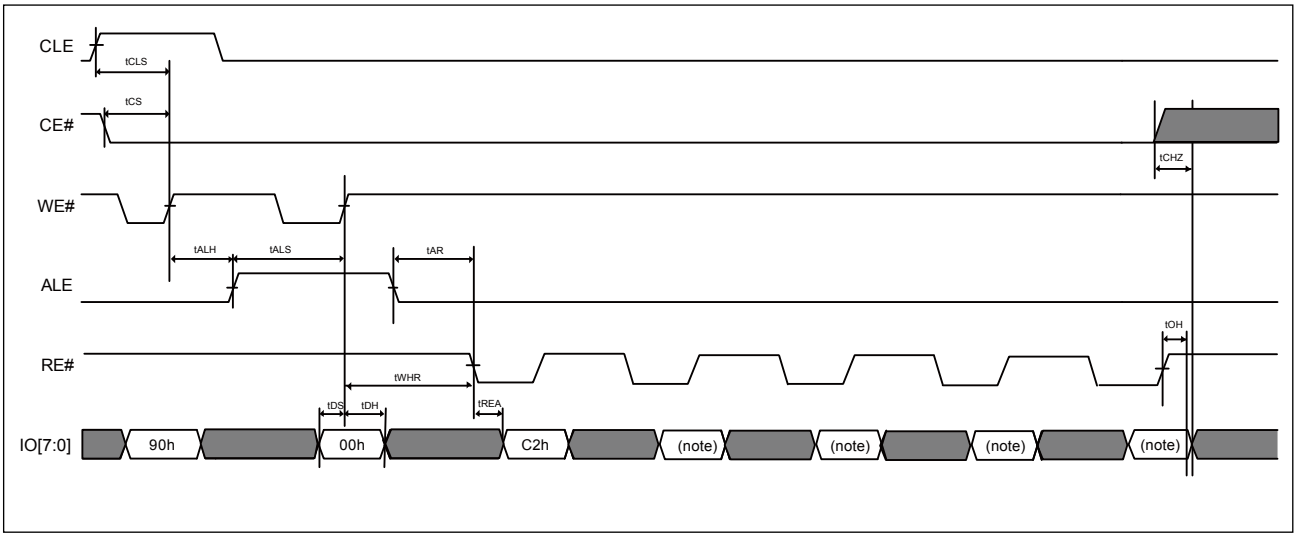

Note: *See also* ***Table 2. ID Codes Read Out by ID Read Command 90H****.*

Figure 17-2. AC Waveforms for ID Read (ONFI Identifier) Operation

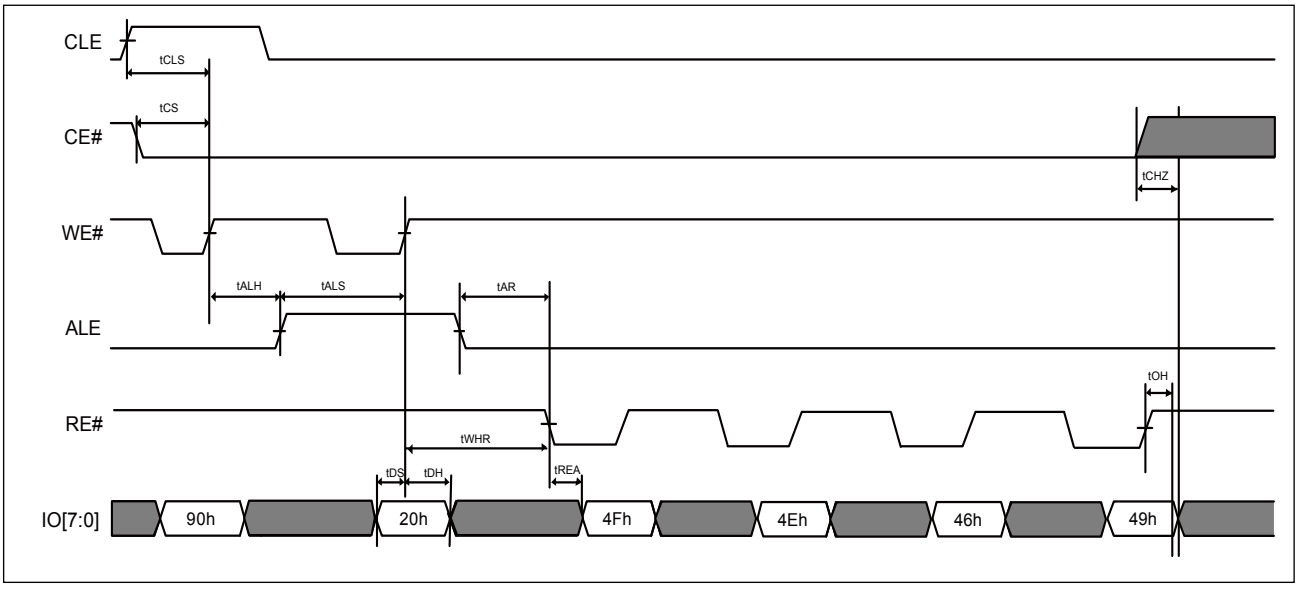

6-9. Status Read

The MX60LF8G18AC provides a status register that outputs the device status by writing a command code 70h, and then the IO pins output the status at the falling edge of CE# or RE# which occurs last. Even though when multiple flash devices are connecting in system and the R/B#pins are common-wired, the two lines of CE# and RE# may be checked for individual devices status separately.

The 8Gb has two dies in a package. The status read command will only output the status of the latest selected die. To avoid the data-bus contention, the status read command should not be used on the interleaved operation. The status enhanced read command can be used for the status check during/after multi-die operations.

The status read command 70h will keep the device at the status read mode unless next valid command is issued. The resulting information is outlined in **Table 4.** as below.

Table 4. Status Output

Pin	Status	Related Mode	Value	
SR[0]	Chip Status	Page Program, Cache Program (Page N), Block Erase	0: Passed	1: Failed
SR[1]	Cache Program Result	Cache Program (Page N-1)	0: Passed	1: Failed
SR[2-4]	Not Used			
SR[5]	Ready / Busy (For P/E/R Controller)	Cache Program/Cache Read operation, other Page Program/Block Erase/Read are same as IO6 (Note 1)	0: Busy	1: Ready
SR[6]	Ready / Busy	Page Program, Block Erase, Cache Program, Read, Cache Read (Note 2)	0: Busy	1: Ready
SR[7]	Write Protect	Page Program, Block Erase, Cache Program, Read	0: Protected	1: Unprotected

Notes:

1. *During the actual programming operation, the SR[5] is "0" value; however, when the internal operation is completed during the cache mode, the SR[5] returns to "1".*
2. *The SR[6] returns to "1" when the internal cache is available to receive new data. The SR[6] value is consistent with the R/B#.*

The following is an example of a HEX data bit assignment:

Figure 18. Bit Assignment (HEX Data)

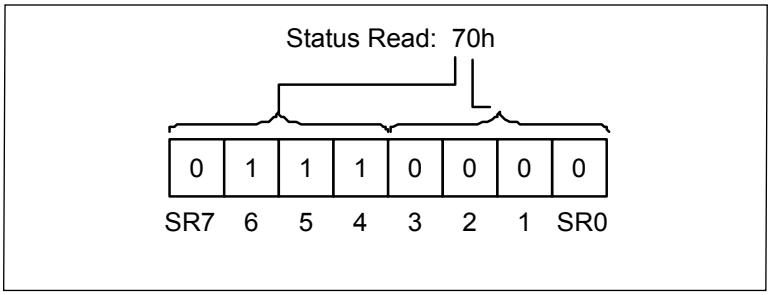

Figure 19. AC Waveforms for Status Read Operation

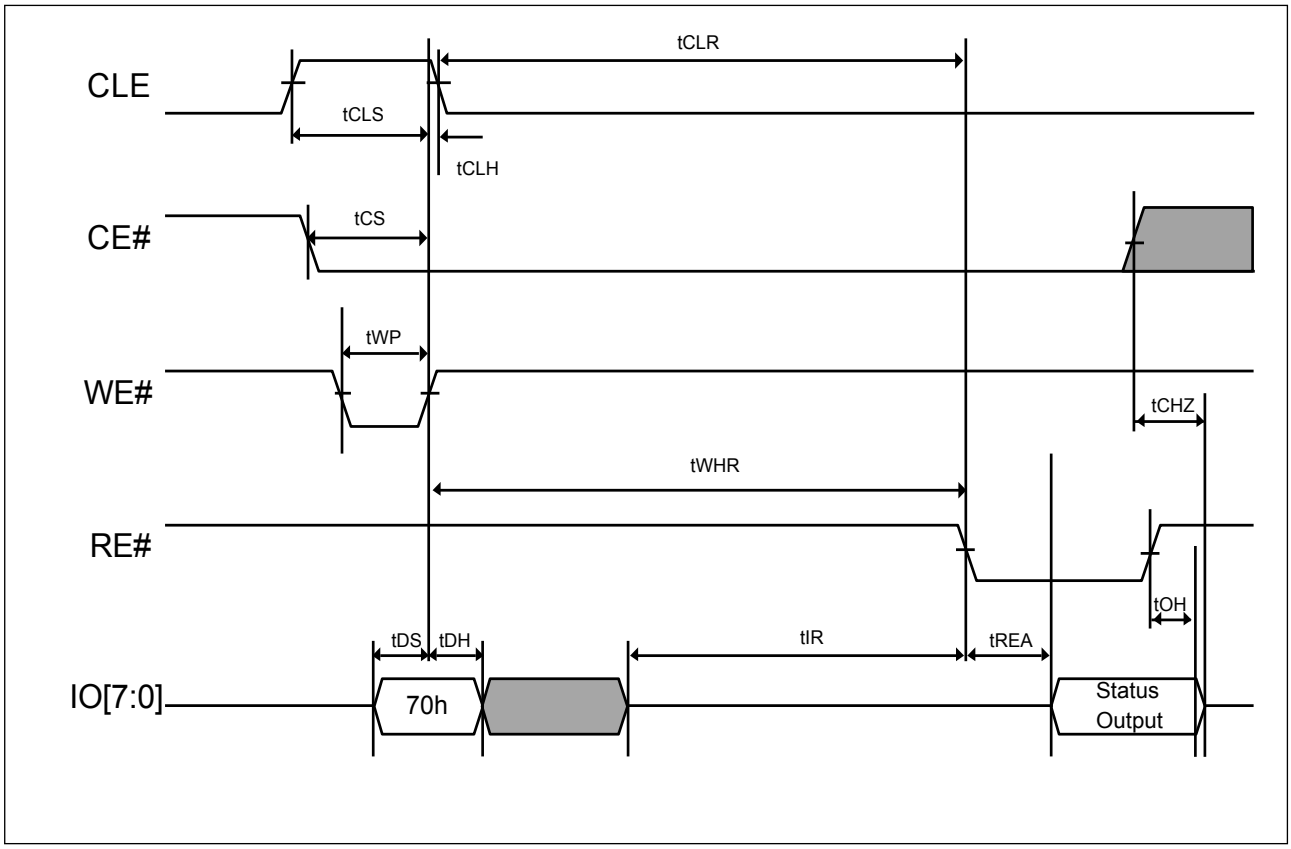

6-10. Status Enhance Read

The 8Gb support the two-plane operation, the Status Enhanced Read command (78h) offers the alternative method besides the Status Read command to get the status of specific plane in the same NAND Flash device. The 8Gb has two dies in a package. The status enhance read command (78h) may output the status of ready/busy of selected die.

The SR[6] and SR[5] bits are shared with all planes of the selected die. However, the SR[0], SR[1], SR[3], SR[4] are for the status of specific plane in the row address. The Status Enhanced Read command is not allowed at power-on Reset (FFh) command, OTP enabled operation.

The selected die will stay in the status enhanced read mode until another valid command issuing. The non-addressed die which is remaining diselected to avoid the data-bus contention.

The Status Enhance Read command also can be used for selected die data output. After writing the 78h command followed by the three address cycles, the status of the selected die is output, after the selected die is ready, writing the read mode command (00h) and then it begins data-out.

Figure 20. AC Waveforms for Status Enhance Operation

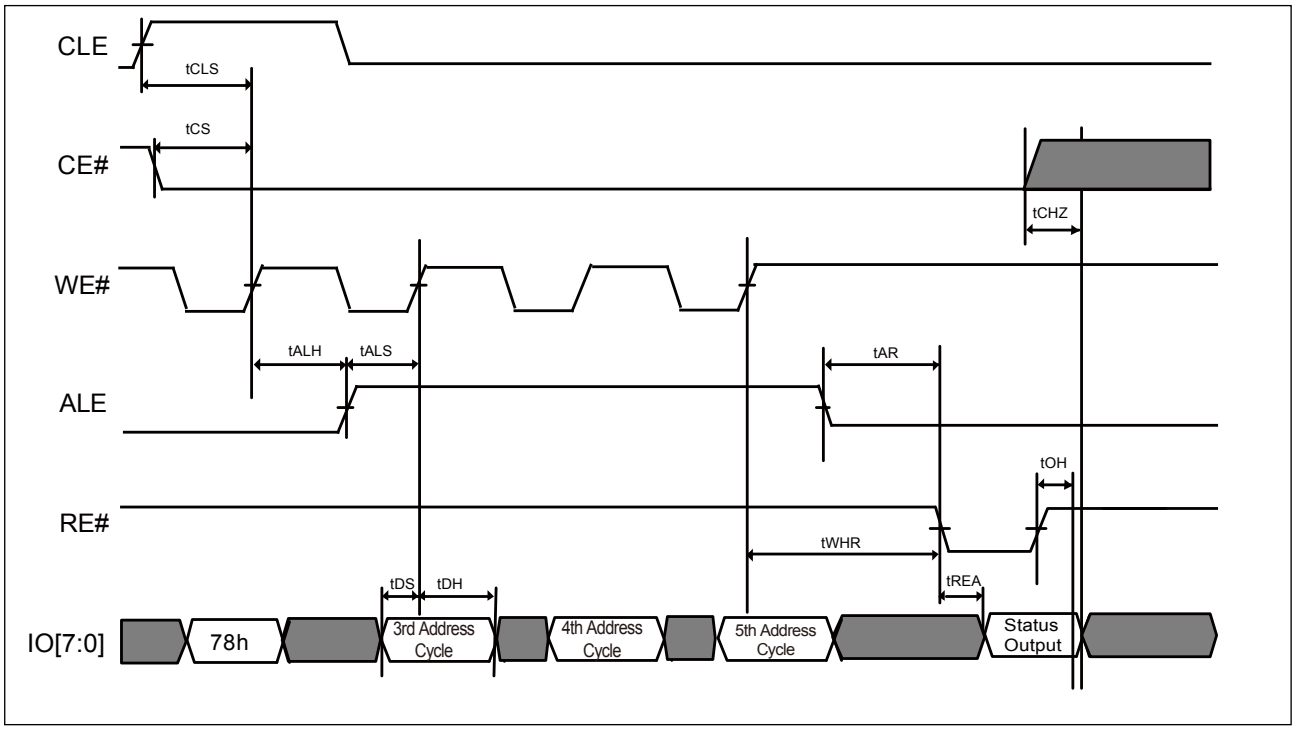

6-11. Reset

The reset command FFh resets the read/program/erase operation and clear the status register to be E0h (when WP# is high). The reset command during the program/erase operation will result in the content of the selected locations (perform programming/erasing) might be partially programmed/erased.

If the Flash memory has already been set to reset stage with reset command, the additional new reset command is invalid.

Figure 21. AC waveforms for Reset Operation

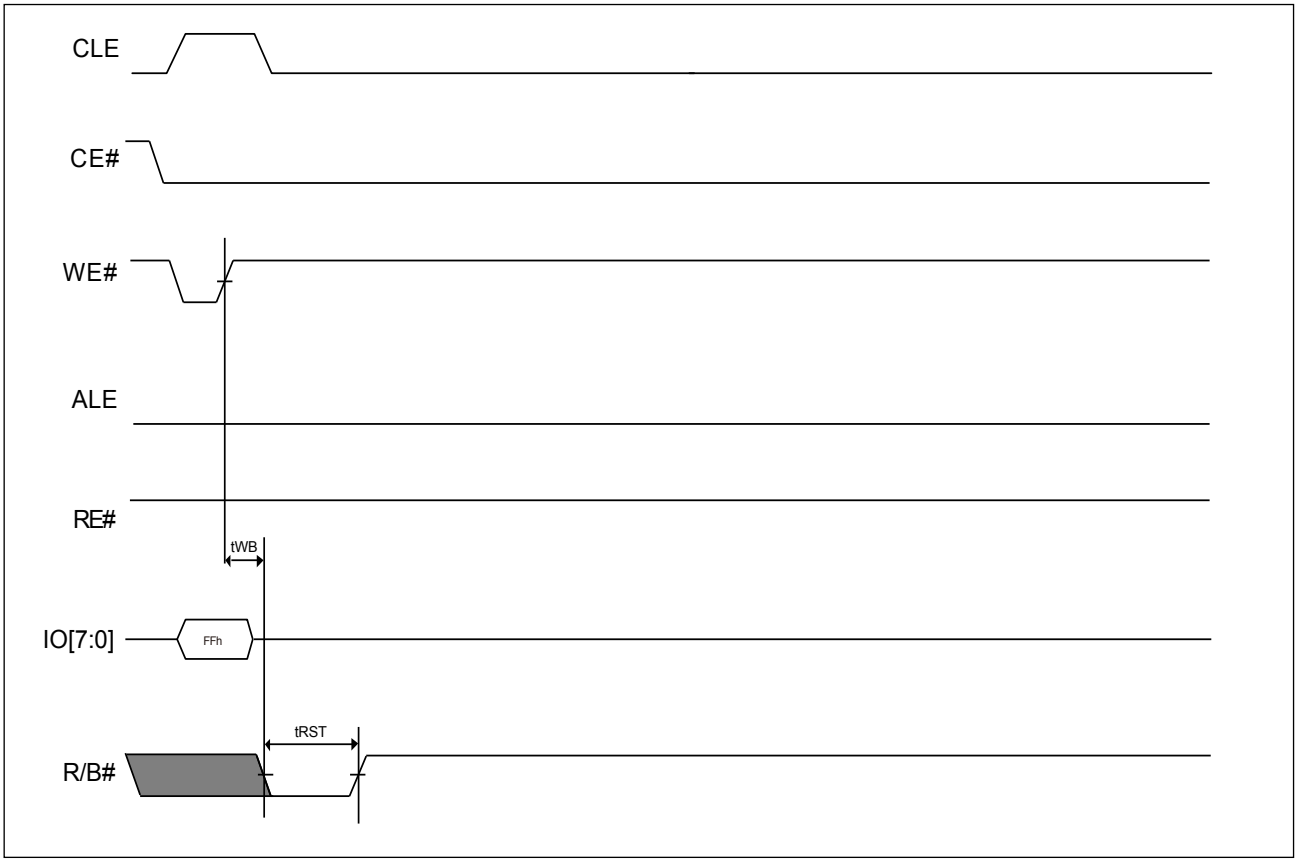

6-12. Parameter Page Read (ONFI)

The NAND Flash device support ONFI Parameter Page Read and the parameter can be read out by sending the command of ECh and giving the address 00h. This command is valid only when internal all die are ready. The NAND device information may refer to the table of parameter page (ONFI), there are three copies of 256-byte data and additional redundant parameter pages.

Once sending the ECh command, the NAND device will remain in the Parameter Page Read mode until next valid command is sent.

The Random Data Out command set (05h-E0h) can be used to change the parameter location for the specific parameter data random read out.

The Status Read command (70h) can be used to check the completion with a following read command (00h) to enable the data out.

Figure 22. AC waveforms for Parameter Page Read (ONFI) Operation

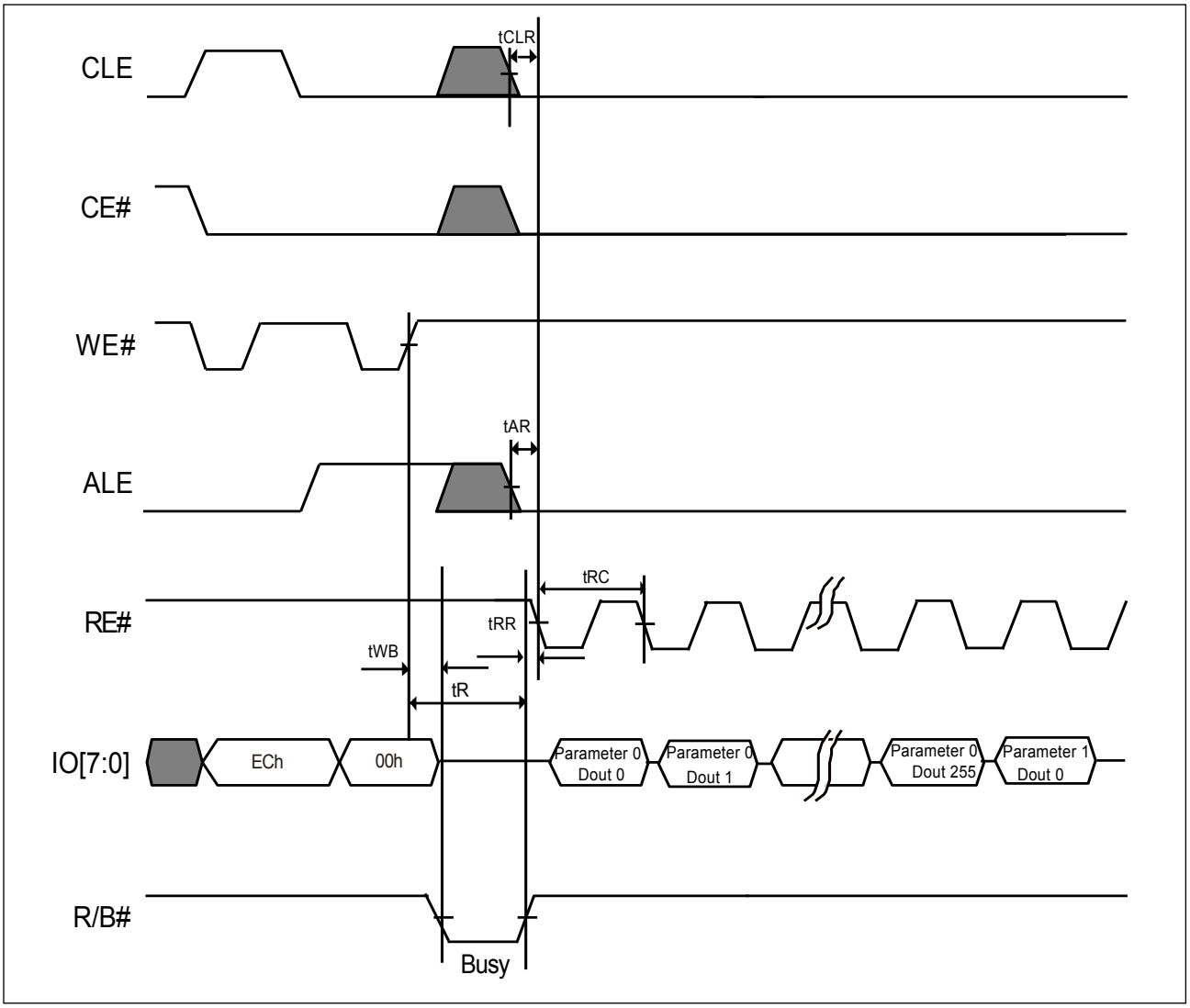

Figure 23. AC Waveforms for Parameter Page Read (ONFI) Random Operation (For 05h-E0h)

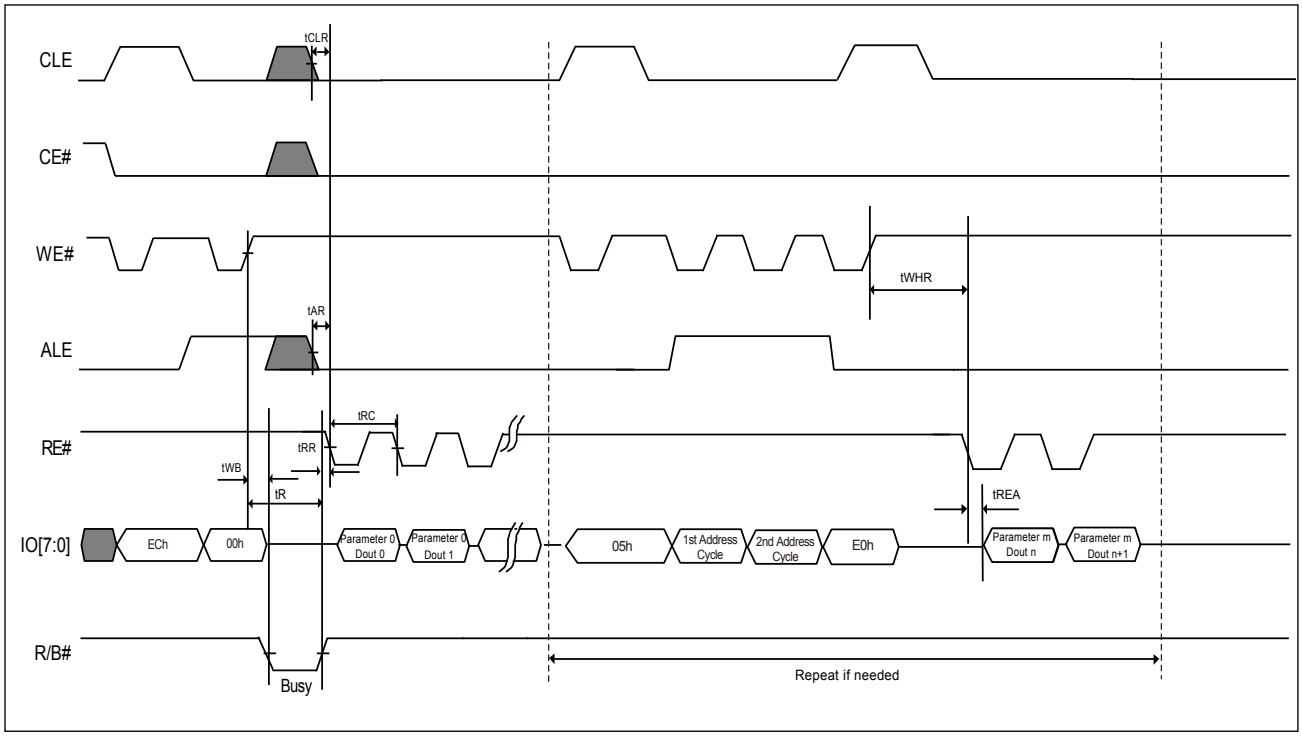

Table 5. Parameter Page (ONFI)

	Revision Information and Features Block		
Byte#	**Description**		**Data**
0-3	**Parameter Page Signature**		4Fh, 4Eh, 46h, 49h
4-5	**Revision Number**		02h, 00h
6-7	**Features Supported**		1Ah, 00h
8-9	**Optional Commands Supported**		3Fh, 00h
10-31	**Reserved**		00h
	Manufacturer Information Block		
Byte#	**Description**		**Data**
32-43	**Device Manufacturer (12 ASCII characters)**		4Dh,41h,43h,52h,4Fh,4Eh,49h,58h, 20h,20h,20h,20h
44-63	**Device Model (20 ASCII Characters)**	MX60LF8G18AC	4Dh,58h,36h,30h,4Ch,46h,38h,47h, 31h,38h,41h,43h,20h,20h,20h,20h, 20h,20h,20h,20h,
64	**JEDEC Manufacturer ID**		C2h
65-66	**Date Code**		00h, 00h
67-79	**Reserved**		00h

Memory Organization Block			
Byte#	**Description**		**Data**
80-83	Number of Data Bytes per Page	2048-byte	00h,08h,00h,00h
84-85	Number of Spare Bytes per Page	64-byte	40h,00h
86-89	Number of Data Bytes per Partial Page	512-byte	00h,02h,00h,00h
90-91	Number of Spare Bytes per Partial Page	16-byte	10h,00h
92-95	Number of Pages per Block		40h,00h,00h,00h
96-99	Number of Blocks per Logical Unit		00h,10h,00h,00h
100	Number of Logical Units (LUNs)		02h
101	Number of Address Cycles		23h
102	Number of Bits per Cell		01h
103-104	Bad Blocks Maximum per LUN		50h,00h
105-106	Block endurance		01h, 05h
107	Guarantee Valid Blocks at Beginning of Target		01h
108-109	Block endurance for guaranteed valid blocks		01h, 03h
110	Number of Programs per Page		04h
111	Partial Programming Attributes		00h
112	Number of Bits ECC Correctability		04h
113	Number of Interleaved Address Bits		01h
114	Interleaved Operation Attributes		0Eh
115-127	Reserved		00h
Electrical Parameters Block			
Byte#	**Description**		**Data**
128	I/O Pin Capacitance		14h
129-130	Timing Mode Support		3Fh,00h
131-132	Program Cache Timing Mode Support		3Fh,00h
133-134	tPROG Maximum Page Program Time (uS)	600us	58h,02h
135-136	tBERS(tERASE) Maximum Block Erase Time (uS)	3,500us	ACh,0Dh
137-138	tR Maximum Page Read Time (uS)	25us	19h,00h
139-140	tCCS Minimum Change Column Setup Time (ns)	60ns	3Ch,00h
141-163	Reserved		00h
Vendor Blocks			
Byte#	**Description**		**Data**
164-165	Vendor Specific Revision Number		00h
166-253	Vendor Specific		00h
254-255	Integrity CRC		Set at Test ***(Note)***
Redundant Parameter Pages			
Byte#	**Description**		**Data**
256-511	Value of Bytes 0-255		
512-767	Value of Bytes 0-255		
768+	Additional Redundant Parameter Pages		

Note: *The Integrity CRC (Cycling Redundancy Check) field is used to verify that the contents of the parameters page were transferred correctly to the host. Please refer to ONFI 1.0 specifications for details.*

The CRC shall be calculated using the following 16-bit generator polynomial:

G(X) = X16 + X15 +X2 + 1

6-13. Unique ID Read (ONFI)

The unique ID is 32-byte and with 16 copies for back-up purpose. After writing the Unique ID read command (EDh) and following the one address byte (00h), the host may read out the unique ID data. The host need to XOR the 1st 16-byte unique data and the 2nd 16-byte complement data to get the result, if the result is FFh, the unique ID data is correct; otherwise, host need to repeat the XOR with the next copy of Unique ID data.

Once sending the EDh command, the NAND device will remain in the Unique ID read mode until next valid command is sent. This command is valid only when internal all die are ready.

To change the data output location, it is recommended to use the Random Data Out command set (05h-E0h).

The Status Read command (70h) can be used to check the completion. To continue the read operation, a following read command (00h) to re-enable the data out is necessary.

Figure 24. AC waveforms for Unique ID Read Operation

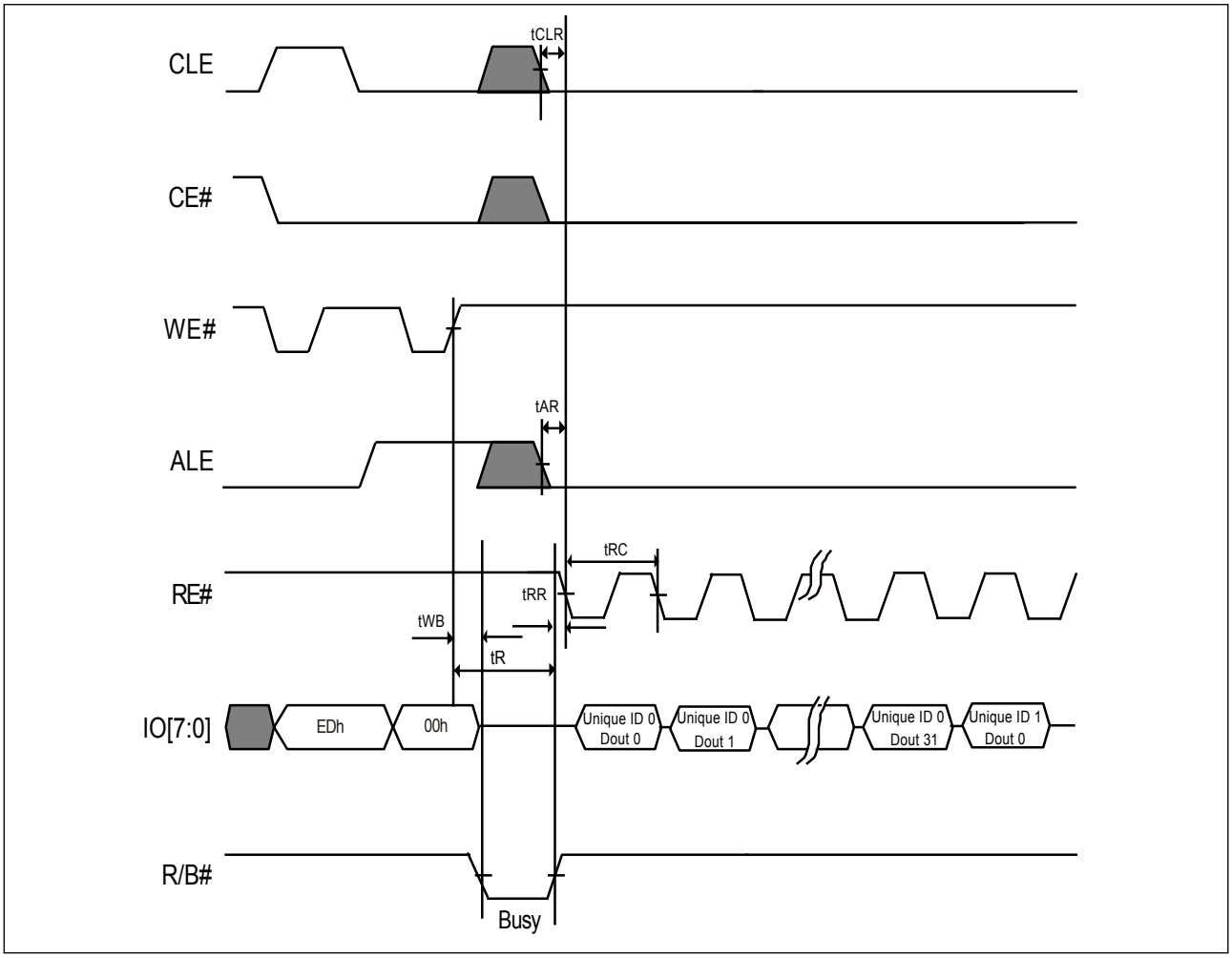

Figure 25. AC waveforms for Unique ID Read Operation (For 05h-E0h)

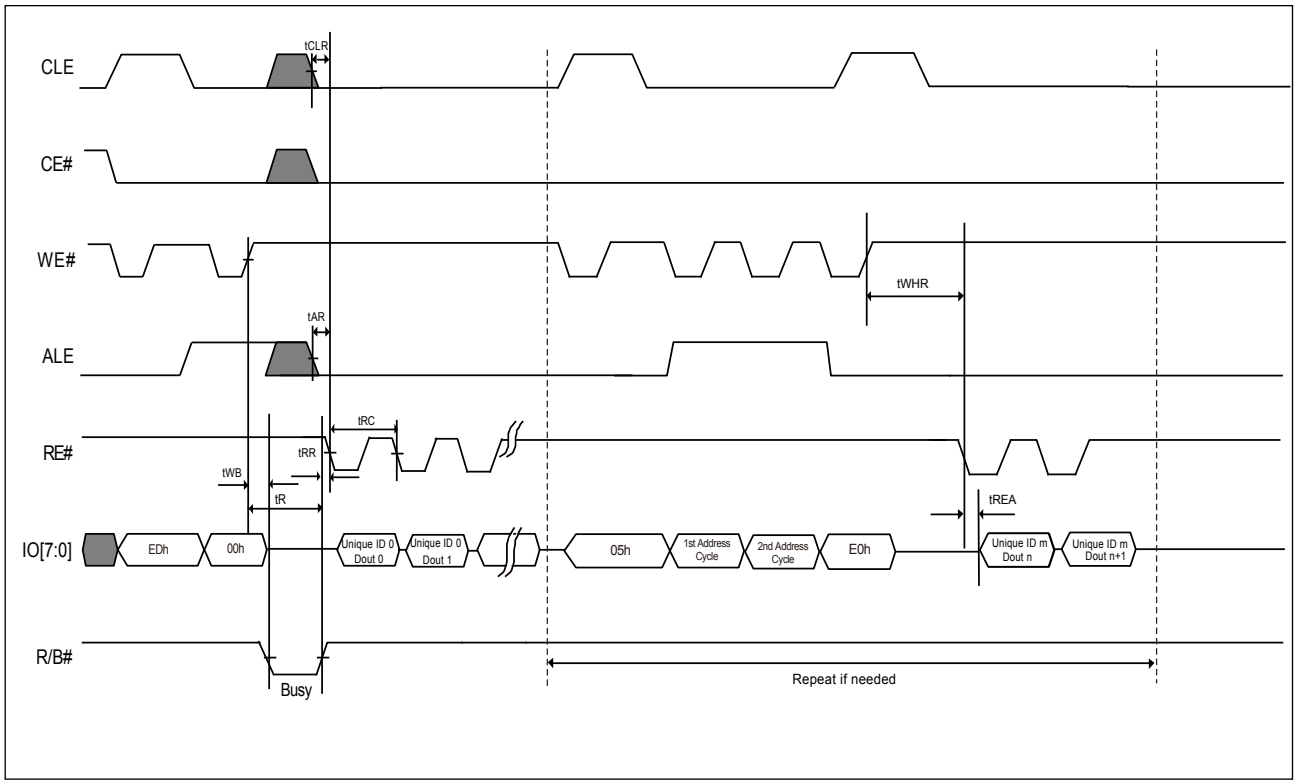

6-14. Feature Set Operation (ONFI)

The Feature Set operation is to change the default power-on feature sets by using the Set Feature and Get Feature command and writing the specific parameter data (P1-P4) on the specific feature addresses. The NAND device may remain the current feature set until next power cycle since the feature set data is volatile. However, the reset command (FFh) can not reset the current feature set.

Table 6-1. Definition of Feature Address

Feature Address	Description
00h-8Fh, 91h-FFh,	Reserved
90h	Array Operation Mode

Table 6-2. Sub-Feature Parameter Table of Feature Address - 90h (Array Operation Mode)

Sub Feature Parameter	Definition		IO7	IO6	IO5	IO4	IO3	IO2	IO1	IO0	Values	Notes
P1	Array Operation Mode	Normal	Reserved (0)						0	0	0000 0000b	1
		OTP Operation	Reserved (0)				x	0	0	1	0000 x001b	
		OTP Protection	Reserved (0)				x	0	1	1	0000 x011b	
P2			Reserved (0)								0000 0000b	
P3			Reserved (0)								0000 0000b	
P4			Reserved (0)								0000 0000b	

Note 1. *The value is clear to 00h at power cycle.*

6-14-1. Set Feature (ONFI)

The Set Feature command is to change the power-on default feature set. After sending the Set Feature command (EFh) and following specific feature and then input the P1-P4 parameter data to change the default power-on feature set. Once sending the EFh command, the NAND device will remain in the Set Feature mode until next valid command is sent. This command is valid only when internal all die are ready.

The Status Read command (70h) may check the completion of the Set Feature.

Figure 26. AC Waveforms for Set Feature (ONFI) Operation

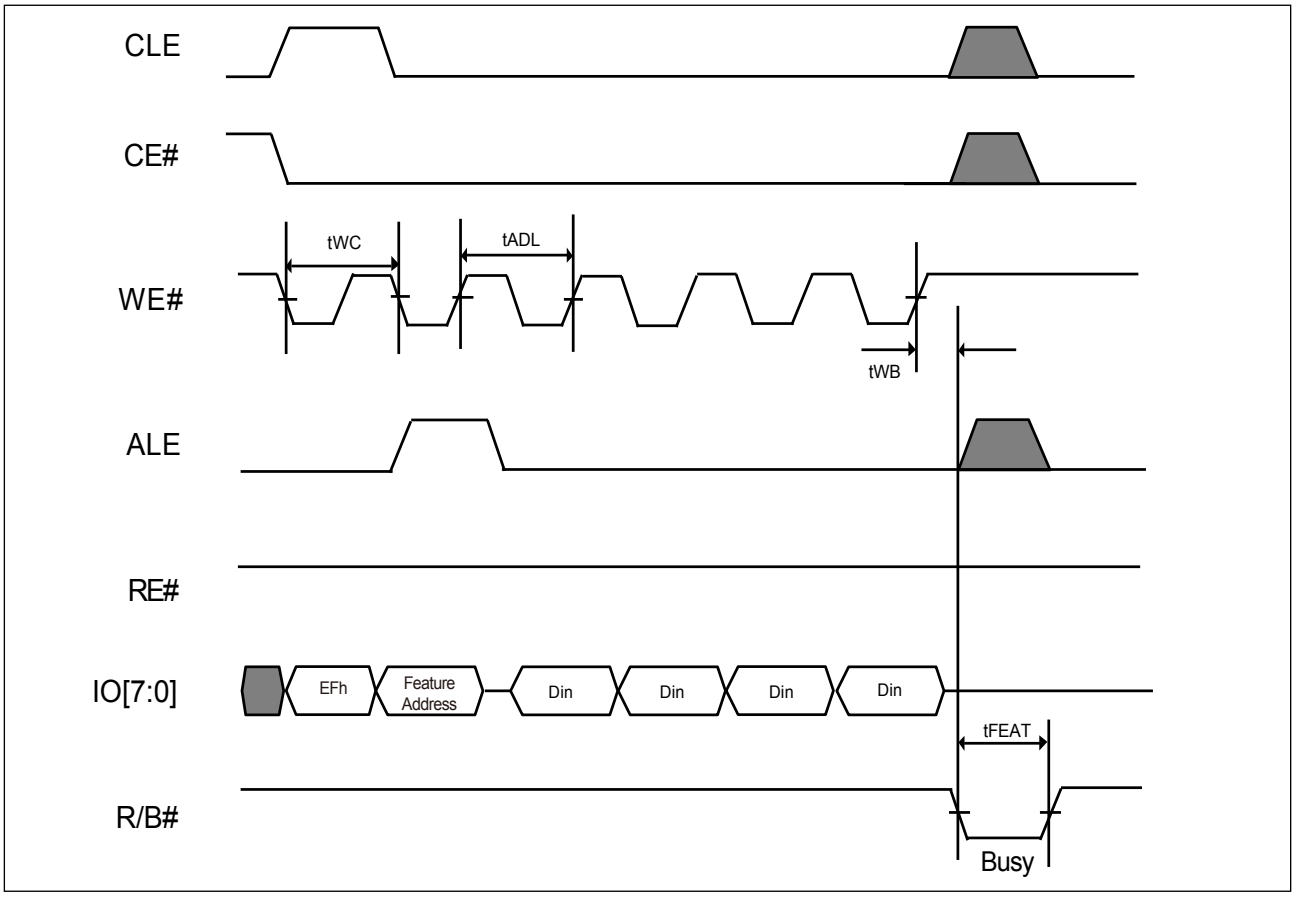

6-14-2. Get Feature (ONFI)

The Get Feature command is to read sub-feature parameter. After sending the Get Feature command (EEh) and following specific feature, the host may read out the P1-P4 sub- feature parameter data. Once sending the EEh command, the NAND device will remain in the Get Feature mode until next valid command is sent. This command is valid only when internal all die are ready.

The Status Read command (70h) can be used to check the completion. To continue the read operation, a following read command (00h) to re-enable the data out is necessary.

Please refer to the following waveform of **Get Feature Operation** for details.

Figure 27. AC Waveforms for Get Feature (ONFI) Operation

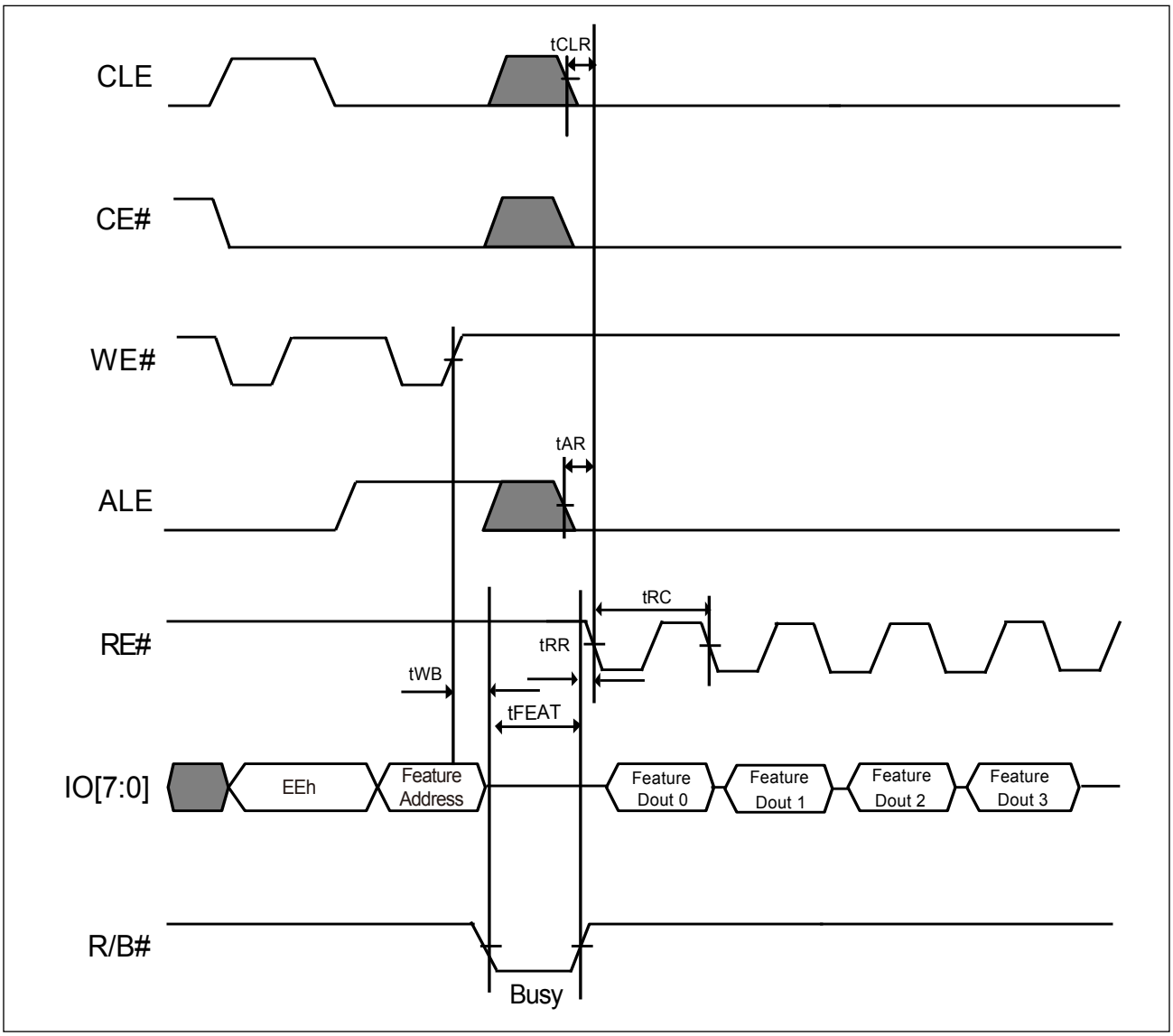

6-14-3. Secure OTP (One-Time-Programmable) Feature

There is an OTP area which has thirty full pages (30 x 2,112-byte) guarantee to be good for system device serial number storage or other fixed code storage. The OTP area is a non-erasable and one-time-programmable area, which is default to “1” and allows whole page or partial page program to be “0”, once the OTP protection mode is set, the OTP area becomes read-only and cannot be programmed again.

The OTP operation is operated by the Set Feature/ Get Feature operation to access the OTP operation mode and OTP protection mode.

To check the NAND device is ready or busy in the OTP operation mode, either checking the R/B# or writing the Status Read command (70h) may collect the status.

To exit the OTP operation or protect mode, it can be done by writing 00h to P1 at feature address 90h.

OTP Read/Program Operation

To enter the OTP operation mode, it is by using the Set Feature command (EFh) and followed by the feature address (90h) and then input the 01h to P1 and 00h to P2-P4 of sub-Feature Parameter data(please refer to the sub-Feature Parameter table). After enter the OTP operation mode, the normal Read command (00h-30h) or Page program(80h-10h) command can be used to read the OTP area or program it. The address of OTP is located on the 02h-1Fh of page address.

Besides the normal Read command, the Random Data Output command (05h-E0h) can be used for read OTP data. However, the Cache Read command is not supported in the OTP area.

Besides the normal page program command, the Random Data Input command (85h) allows multi-data load in non-sequential address. After data load is completed, a program confirm command (10h) is issued to start the page program operation. The number of partial-page OTP program is 8 per each OTP page.

Figure 28. AC Waveforms for OTP Data Read

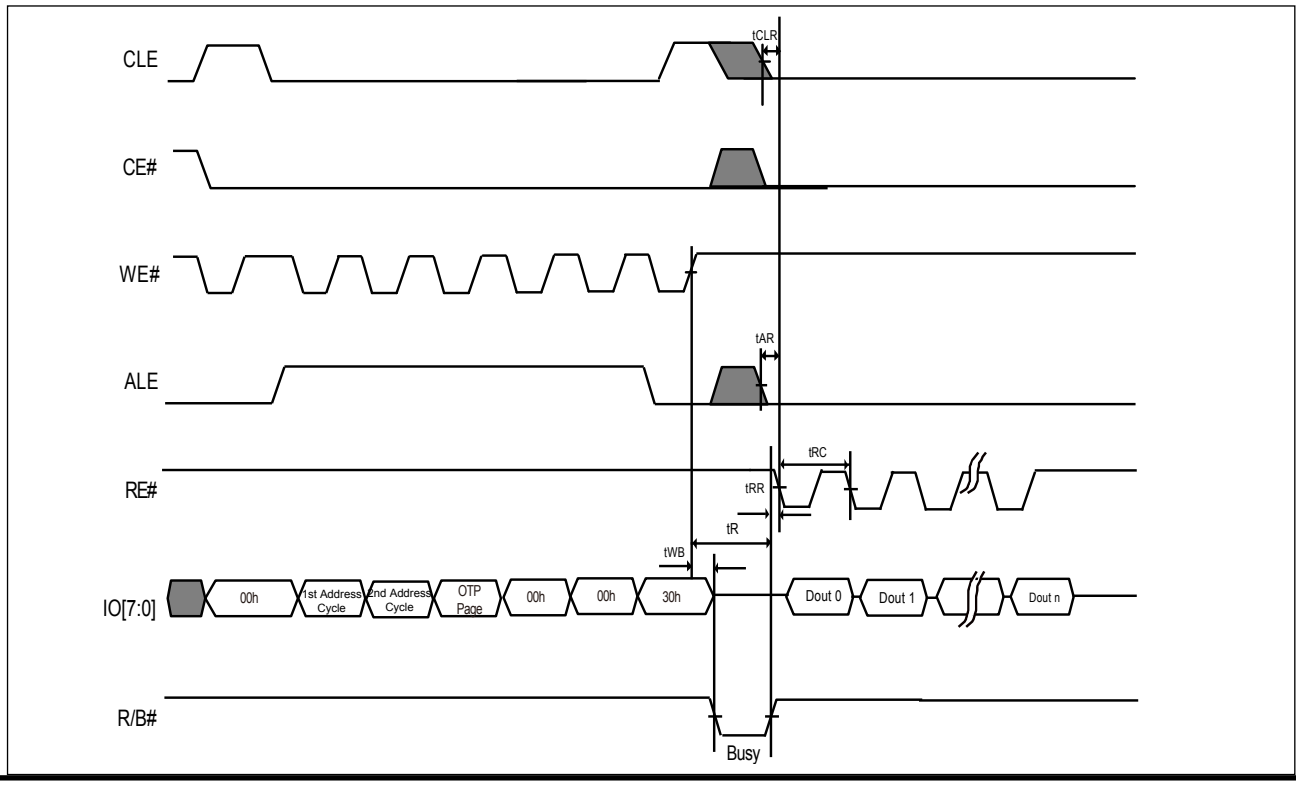

Figure 29. AC Waveforms for OTP Data Read with Random Data Output

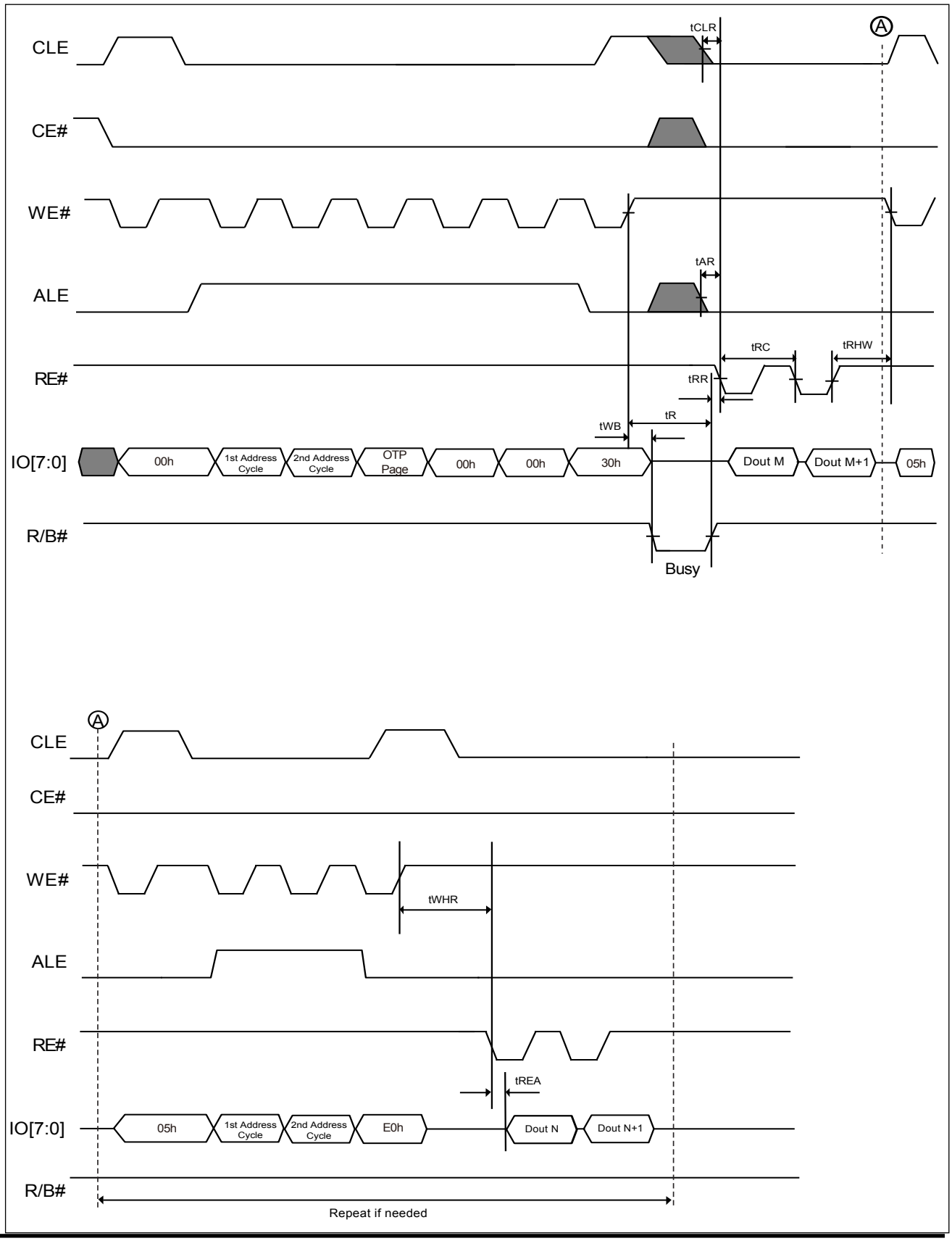

Figure 30. AC Waveforms for OTP Data Program

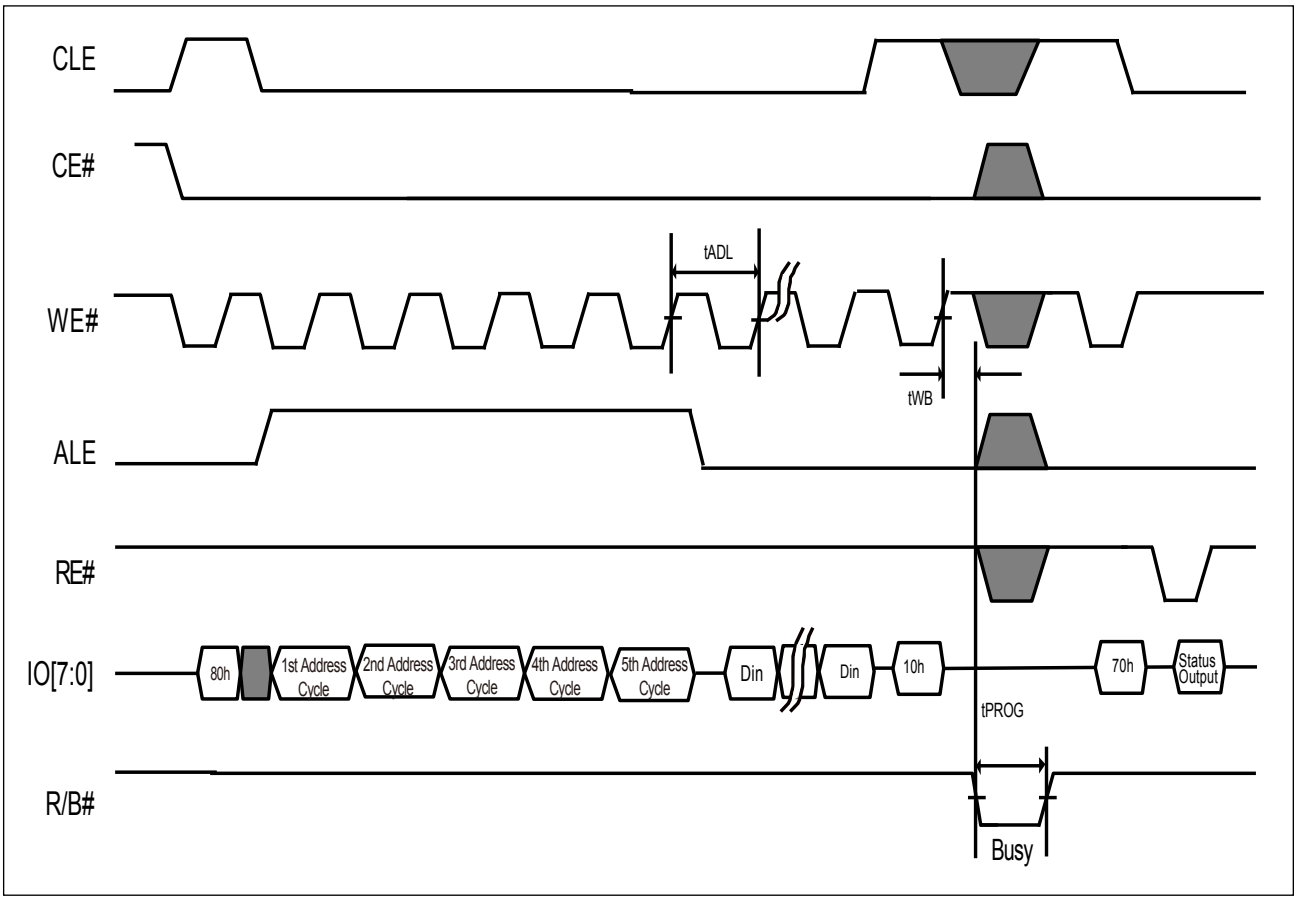

Figure 31. AC Waveforms for OTP Data Program with Random Data Input

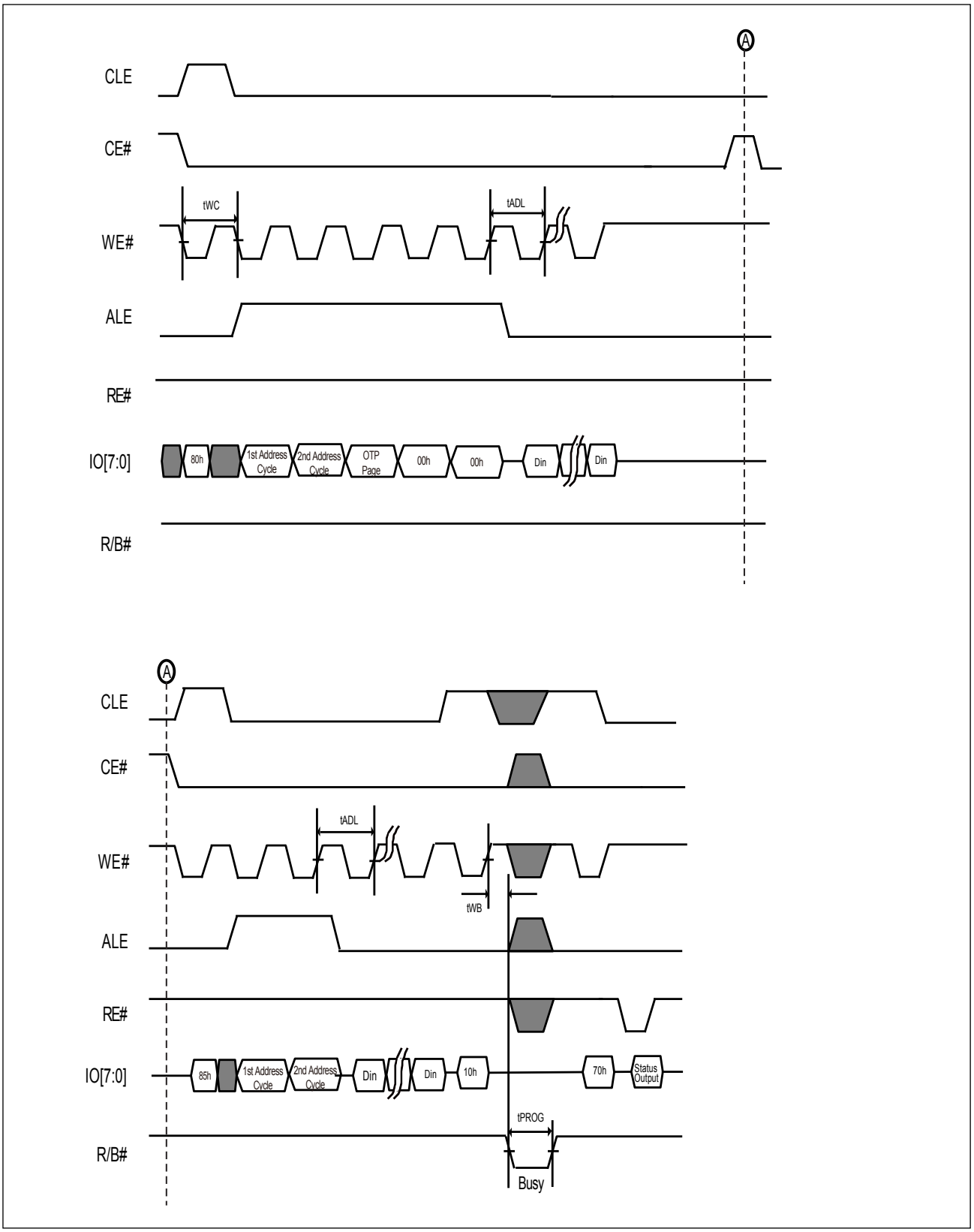

OTP Protection Operation

To prevent the further OTP data to be changed, the OTP protection mode operation is necessary. To enter the OTP protection mode, it can be done by using the Set Feature command (EFh) and followed by the feature address (90h) and then input the 03h to P1 and 00h to P2-P4 of sub-Feature Parameter data (please refer to the sub-Feature Parameter table). And then the normal page program command (80h-10h) with the address 00h before the 10h command is required.

The OTP Protection mode is operated by the whole OTP area instead of individual OTP page. Once the OTP protection mode is set, the OTP area cannot be programmed or unprotected again.

Figure 32. AC Waveforms for OTP Protection Operation

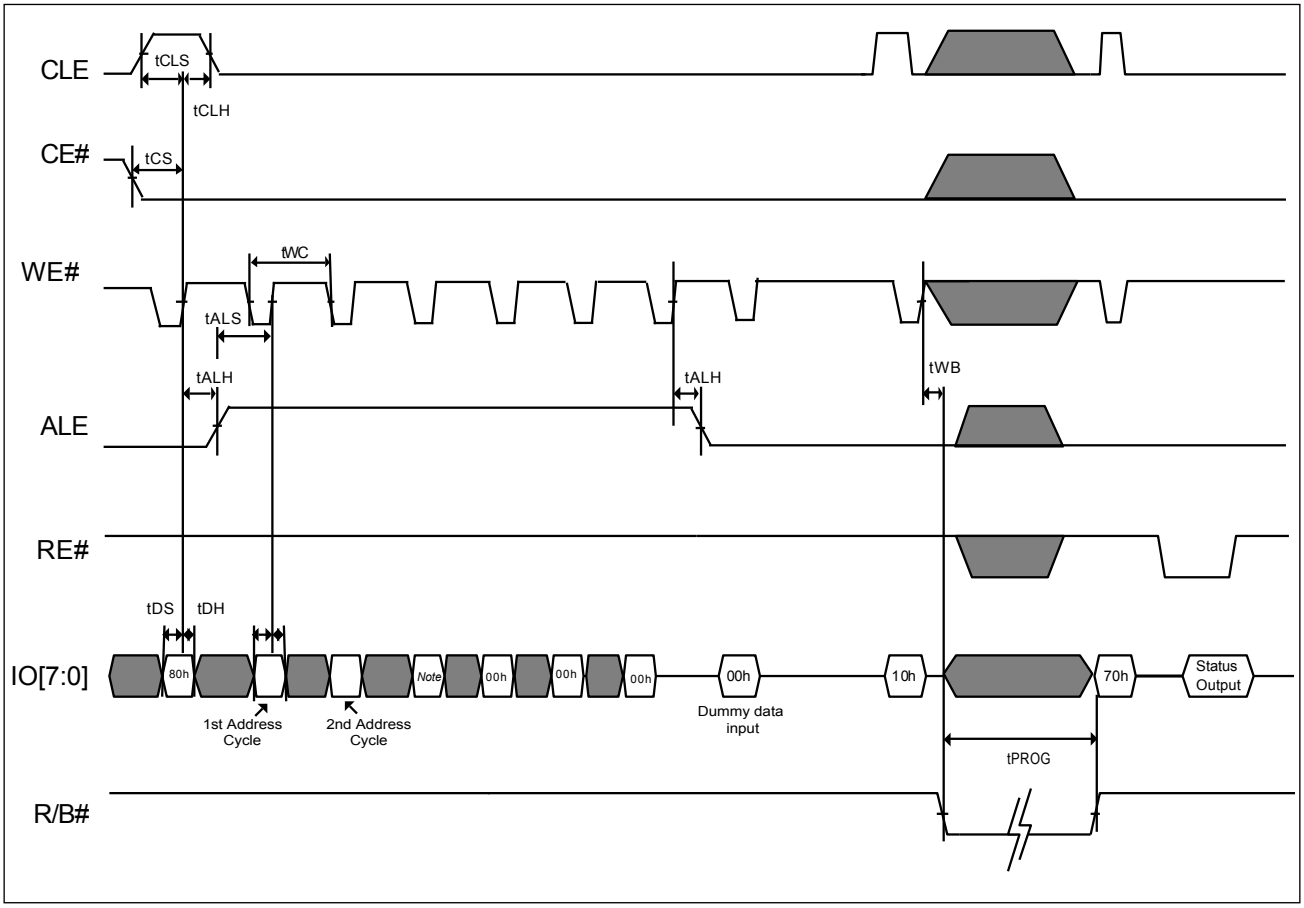

Note: *This address cycle can be any value since the OTP protection protects the entire OTP area instead of individual OTP page.*

6-15. Two-Plane Operations

The 8Gb NAND device is divided into two planes in each die for performance improvement. In the two-plane operation, the NAND device may proceed the same type operation (for example: Program or Erase) on the two planes of a die concurrent or overlapped by the two-plane command sets. The different type operations cannot be done in the two-plane operations; for example, it cannot be done to erase one plane and program the other plane concurrently. The two-plane operations should be in the same die.

The plane address A18 must be different from each selected plane address. The page address A12-A17 of individual plane must be the same for two-plane operation.

The Status Read command(70h) may check the device status in the two-plane operation, if the result is failed and then the Status Enhanced Read (78h) may check which plane is failed.

6-16. Two-plane Program (ONFI) and Two-plane Cache Program (ONFI)

The two-plane program command (80h-11h) may input data to cache buffer and wait for the final plane data input with command (80h-10h) and then transfer all data to NAND array. As for the two-plane cache program operation, it can be achieved by a two-plane program command (80h-11h) with a cache program command (80h-15h), and the final address input with the confirm command (80h-10h). Please refer to the waveforms of two-plane program and two-plane cache program for details. The random data input command (85h) can be also used in the two-plane program operation for changing the column address, please refer to the waveform of two-plane program with random data input.

Notes:

1. Page number should be the same for both planes.

2. Block address [29:18] can be different, A30 should be the same for both planes.

For examples:

If the user issues 80h-(block address 5h, page address 5h) -11h - 80h - (block address - 18h, page address 5h) - 10h,

The programmed page is

- Plane 0: block address 18h, page address 5h

- Plane 1: block address 5h, page address 5h

Note: *Die selection address = A30, Block address = A [29:18], Page address = A [17:12]*

Figure 33-1. AC Waveforms for Two-plane Program (ONFI)

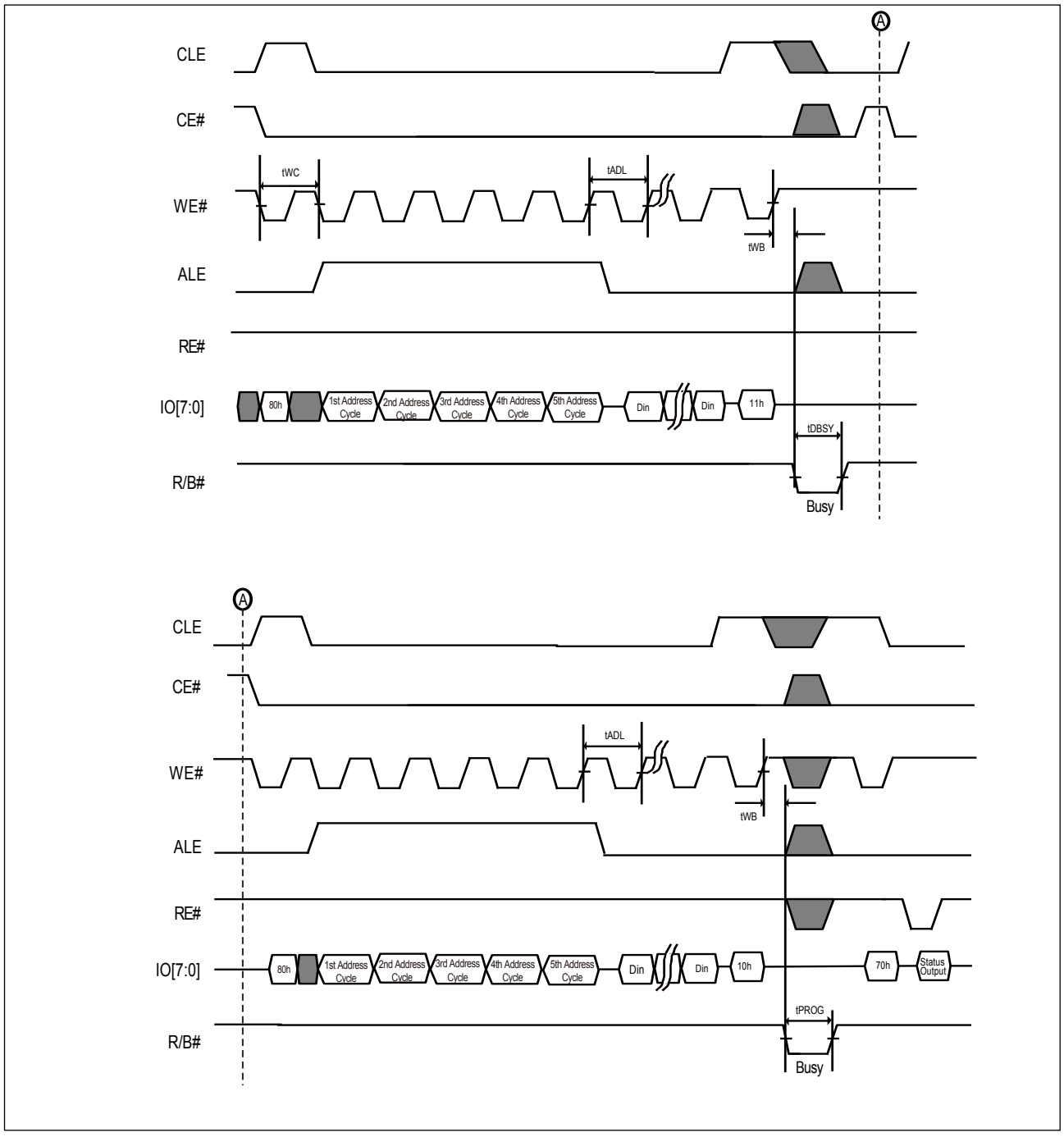

Figure 33-2. AC Waveforms for Page Program Random Data Two-plane (ONFI)

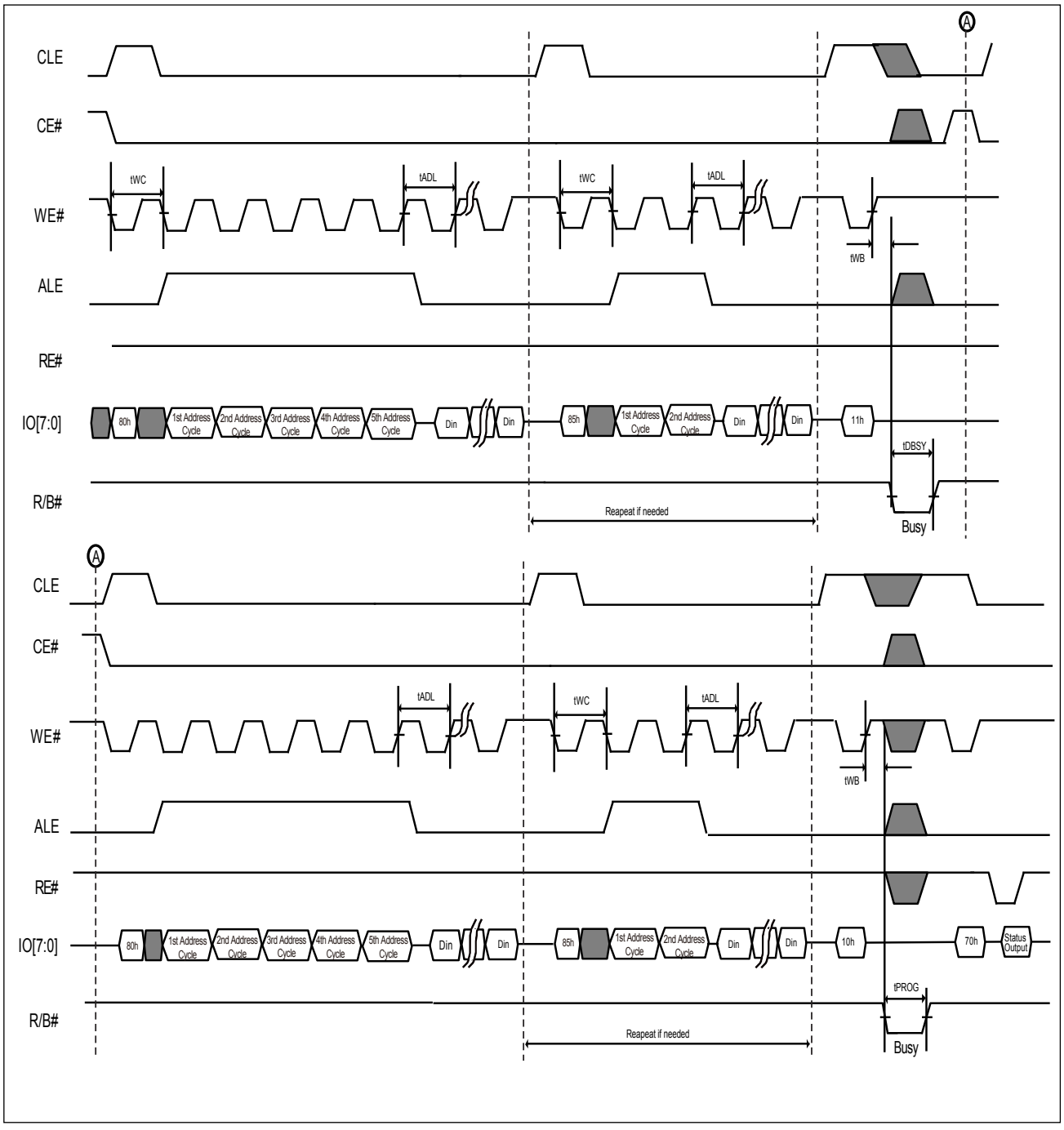

Figure 34. AC Waveforms for Two-plane Cache Program (ONFI)

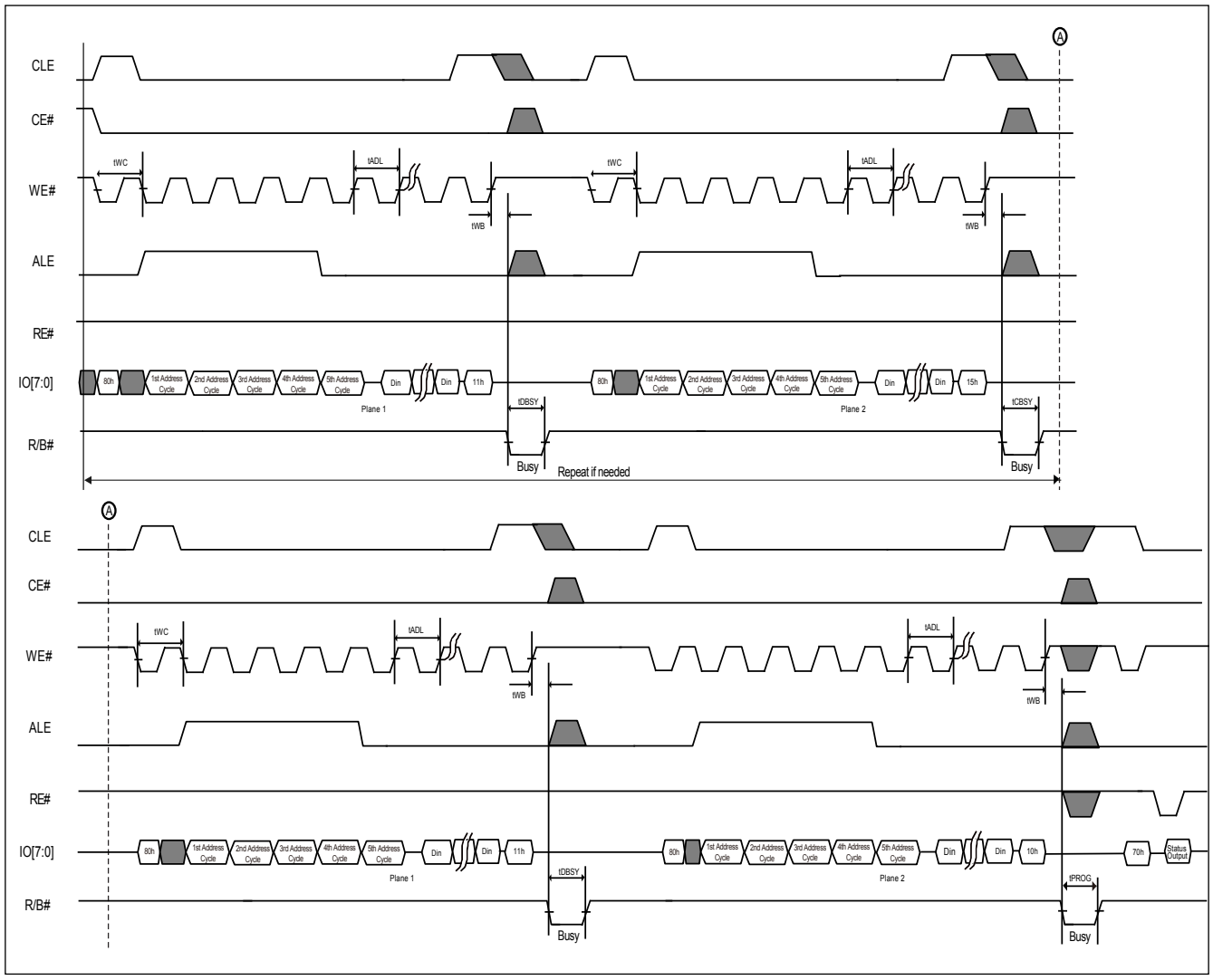

6-17. Two-plane Block Erase (ONFI)

The two-plane erase command (60h-D1h) may erase the selected blocks in parallel from each plane, with setting the 1st and 2nd block address by (60h-D1h) & (60h-D0h) command and then erase two selected blocks from NAND array. Please refer to the waveforms of two-plane erase for details.

Figure 35. AC Waveforms for Two-plane Erase (ONFI)

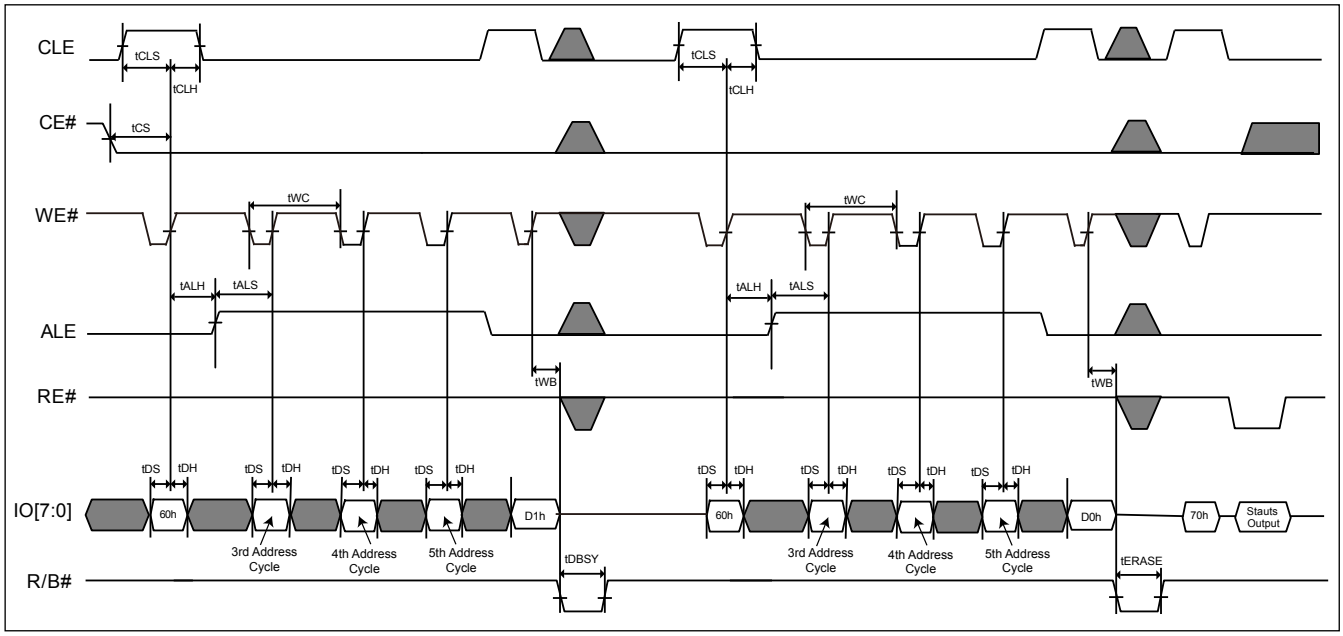

6-18. Interleaved Die Operations

The interleaved Die Operation can be applied on an idle die while another die is busy. The interleaved Die Operations are allowed on the following commands: Read Mode, Page Program, Two planes Page Program, Cache Program, Two Planes Cache Program, Block Erase and Two planes Block Erase. For the interleaved Die operations with Two planes page program, Two planes cache program and Two planes block erase, the die address (A30) should be the same.

A series program operation must be applied before a series read operation while a interleaved die operation involves a series read operation and a series program operation. To avoid the cache register data be cleared out by 80h command, the data of read operation must be sent to host before the next program operation applies.

To check the operation status during the Interleaved Die Operations, a data polling of R/B# may determine the operation completion of all dies. The R/B# signal is 0, which means any die is busy; R/B# signal is 1, which means all dies are ready. The other way to check the operation completion is to send Status Enhance Read command (78h) to select die for individual die status. Please note the Status Read command (70h) must not be applied for the status check during the Interleaved Die Operation. It will cause data-bus contention.

As for the cache operation during the Interleaved Die Operation, the status bit SR[6] returns to "1" when the internal cache is available to receive new data. When all operations are completed on a die, the SR[5] shows “1”.

The Interleaved Die Operations cannot be applied after the following command: RESET (FFh), ID read (90h), Parameter Page Read (ECh), Unique ID Read (EDh), Set Feature (EFh), Get Feature (EEh). After the the SR[5] shows “1” ready, and then the Interleaved Die Operation may be applied.

Figure 36-1. AC Waveforms for Interleaving Block Erase

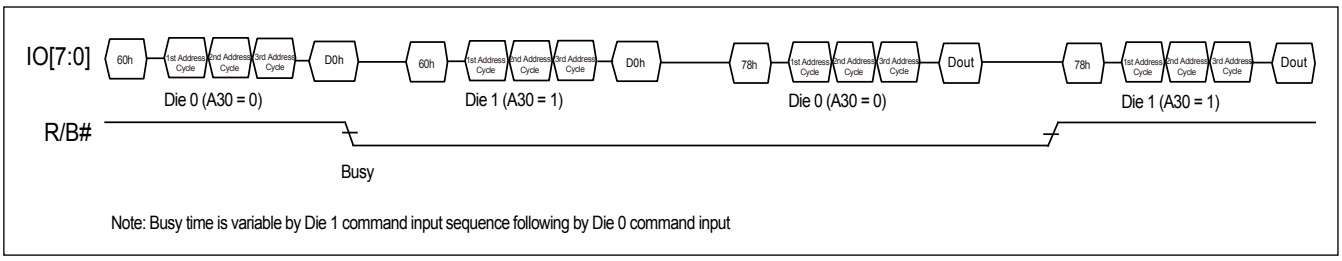

Note: Busy time is variable by Die 1 command input sequence following by Die 0 command input

Figure 36-2. AC Waveforms for Interleaving Cache Program

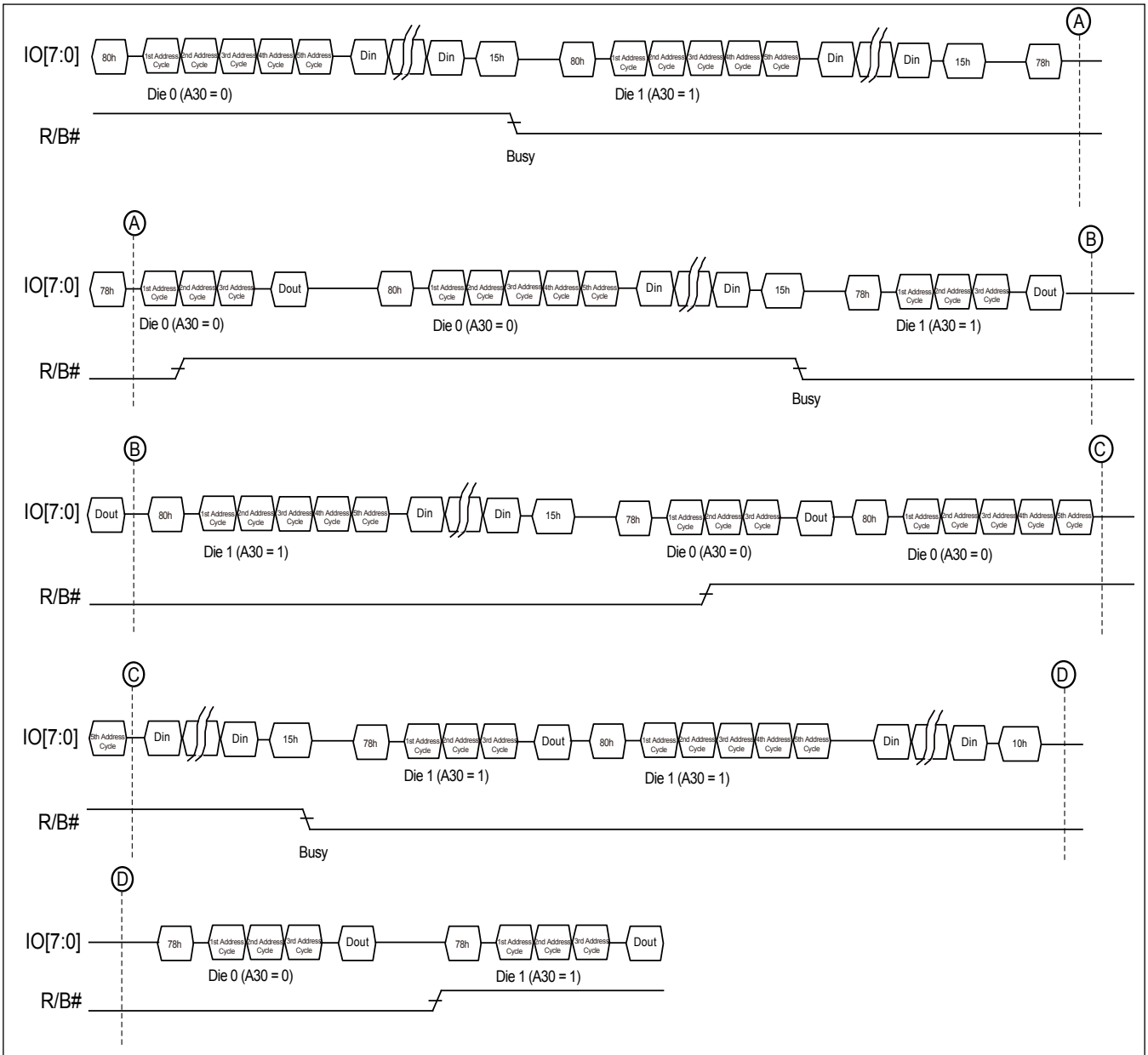

Note: Busy time is variable by Die 1 command input sequence following by Die 0 command input

Figure 36-3. AC Waveforms for Interleaving Page Progrm to Read

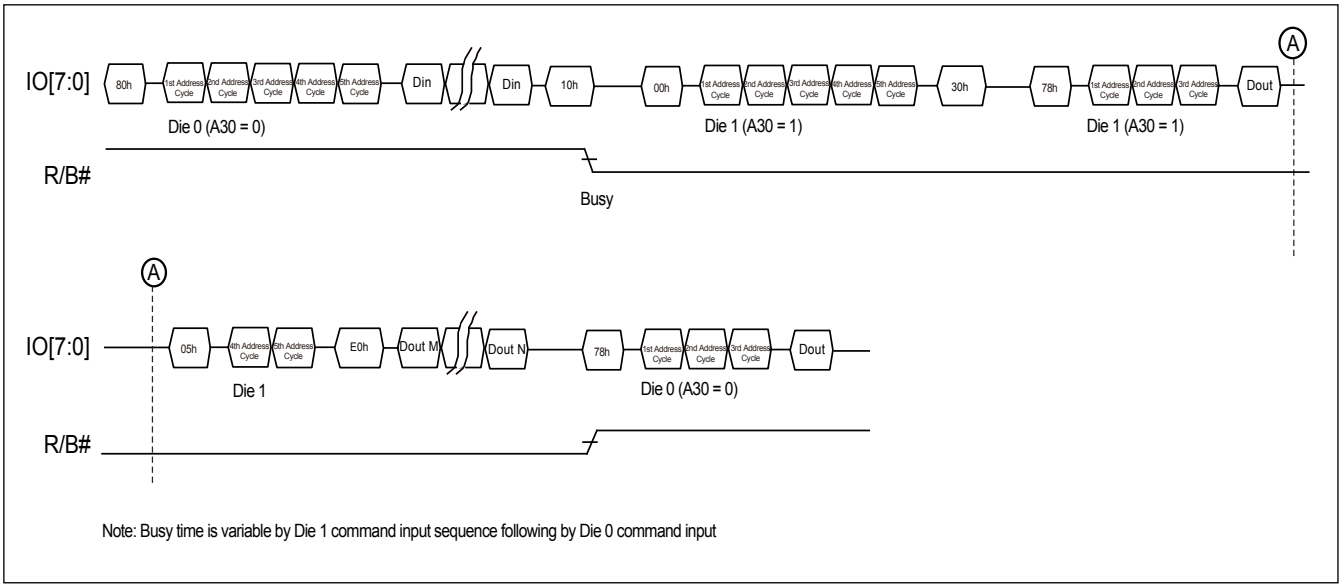

Figure 36-4. AC Waveforms for Interleaving Page Progrm

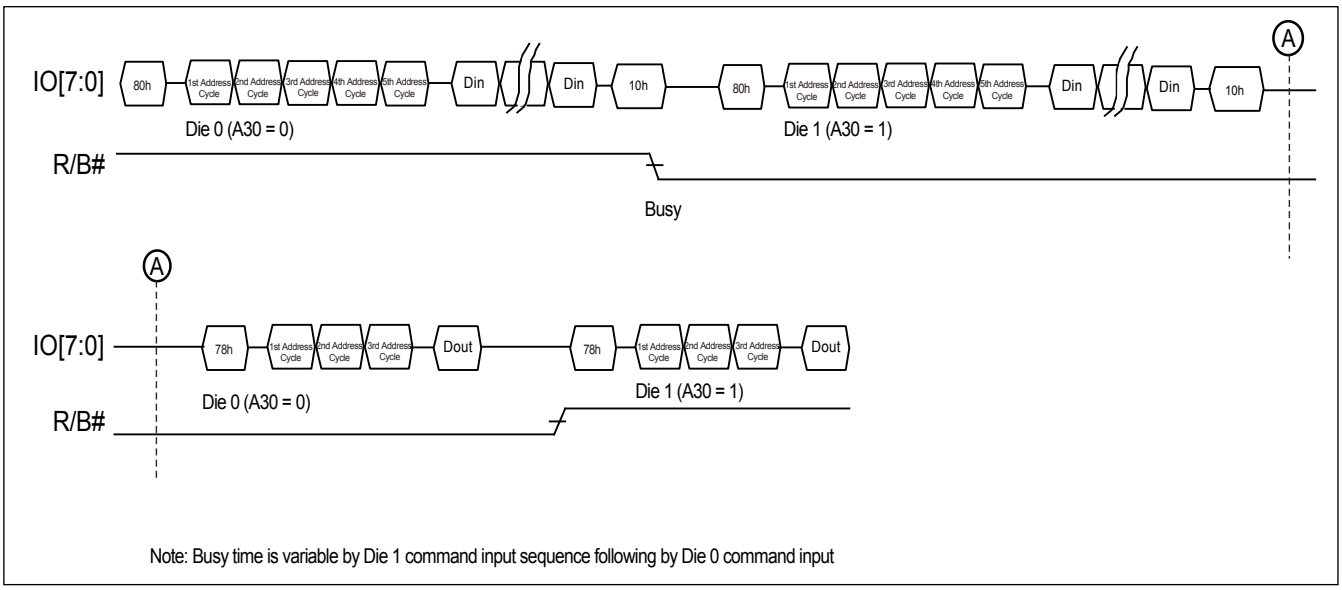

Figure 36-5 AC Waveforms for Interleaving Page Read

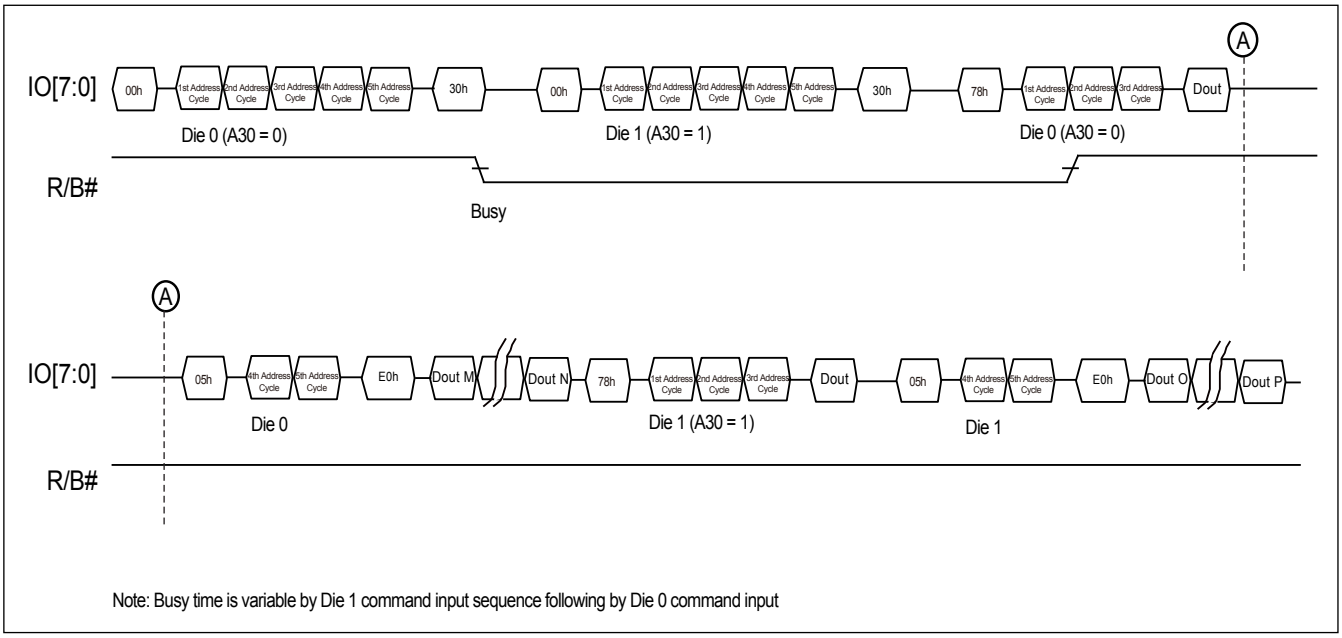

Note: Busy time is variable by Die 1 command input sequence following by Die 0 command input

Figure 36-6. AC Waveforms for Interleaving two plane block erase

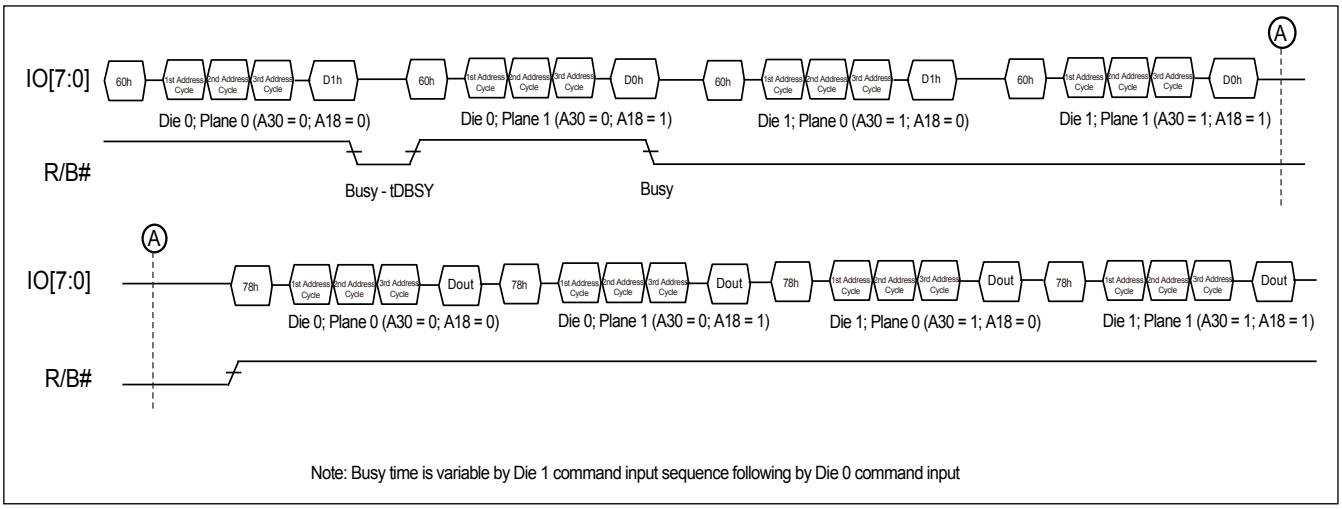

Note: Busy time is variable by Die 1 command input sequence following by Die 0 command input

Figure 36-7. AC Waveforms for Interleaving two plane page program

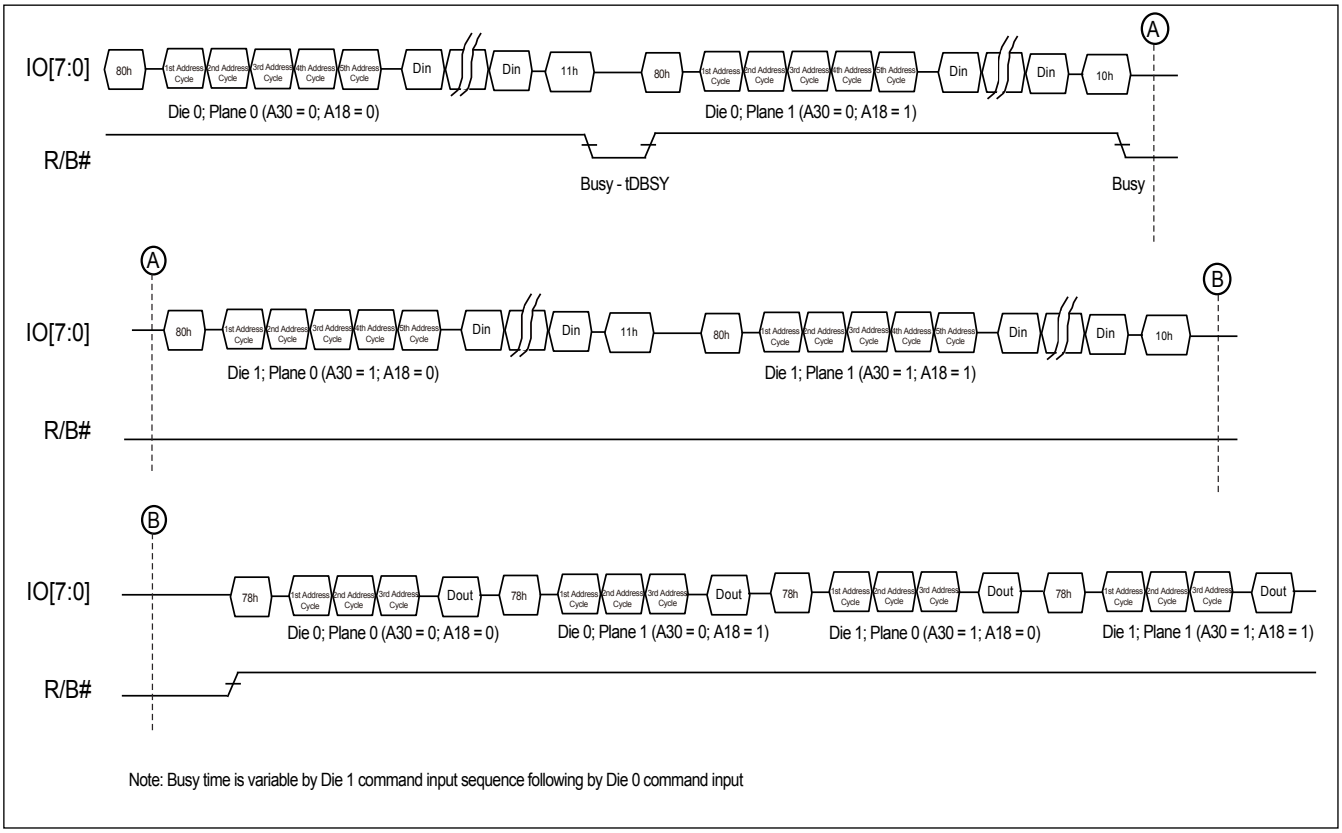

Note: Busy time is variable by Die 1 command input sequence following by Die 0 command input

7. PARAMETERS

7-1. ABSOLUTE MAXIMUM RATINGS

Temperature under Bias	-50°C to +125°C
Storage temperature	-65°C to +150°C
All input voltages with respect to ground (Note 2)	-0.6V to 4.6V
VCC supply voltage with respect to ground (Note 2)	-0.6V to 4.6V
ESD protection	>2000V

Notes:

1. *Minimum voltage may undershoot to -2V for the period of time less than 20ns.*
2. *The reliability of device may be impaired by exposing to extreme maximum rating conditions for long range of time.*
3. *Permanent damage may be caused by the stresses higher than the "Absolute Maximum Ratings" listed.*

Table 7. Operating Range

Temperature	VCC	Tolerance
-40°C to +85°C	+3.3V	2.7 ~ 3.6V

Table 8. DC Characteristics

Symbol	Parameter	Test Conditions	Min.	Typical	Max.	Unit	Notes
VIL	Input low level		-0.3		0.2VCC	V	
VIH	Input high level		0.8VCC		VCC + 0.3	V	
VOL	Output low voltage	IOL= 2.1mA, VCC= VCC Min.			0.2	V	
VOH	Output high voltage	IOH= -400uA, VCC= VCC Min.	VCC-0.2V			V	
ISB1	VCC standby current (CMOS)	CE# = VCC -0.2V, WP# = 0/VCC		20	100	uA	
ISB2	VCC standby current (TTL)	CE# = VIH Min., WP# = 0/VCC			2	mA	
ICC0	Power on current (Including POR current)				60	mA	
ICC1	VCC active current (Sequential Read)	tRC Min., CE# = VIL, IOUT= 0mA		20	30	mA	
ICC2	VCC active current (Program)			20*(Note)*	30	mA	
ICC3	VCC active current (Erase)			15	30	mA	
ILI	Input leakage current	VIN= 0 to VCC Max.			+/- 20	uA	
ILO	Output leakage current	VOUT= 0 to VCC Max.			+/- 20	uA	
ILO (R/B#)	Output current of R/B# pin	VOL=0.4V	8	10		mA	

Note: *The typical program current (ICC2) for two-plane program operation is 25mA.*

Table 9. Capacitance

TA = +25°C, F = 1 MHz

Symbol	Parameter	Typ.	Max.	Units	Conditions
CIN	Input capacitance		20	pF	VIN = 0 V
COUT	Output capacitance		20	pF	VOUT = 0 V

Table 10. AC Testing Conditions

Testing Conditions	Value	Unit
Input pulse level	0 to VCC	V
Output load capacitance	1TTL+CL(50)	pF
Input rise and fall time	5	ns
Input timing measurement reference levels	VCC/2	V
Output timing measurement reference levels	VCC/2	V

Table 11. Program and Erase Characteristics

Symbol	Parameter	Min.	Typ.	Max.	Unit	Note
tPROG	Page programming time		300	600	us	
tCBSY (Program)	Dummy busy time for cache program		3	600	us	
tRCBSY (Read)	Dummy busy time for cache read		2	25	us	
tDBSY	The busy time for two-plane program/erase operation		0.5	1	us	
tFEAT	The busy time for Set Feature/ Get Feature			1	us	
tOBSY	The busy time for OTP program at OTP protection mode			30	us	
tPBSY	The busy time for program/erase at protected blocks			3	us	
NOP	Number of partial program cycles in same page			4	cycles	
tERASE (Block)	Block erase time		1	3.5	ms	

Table 12. AC Characteristics

Symbol	Parameter	Min.	Typical	Max.	Unit	Note
tCLS	CLE setup time	10			ns	1
tCLH	CLE hold time	5			ns	1
tCS	CE# setup time	15			ns	1
tCH	CE# hold time	5			ns	1
tWP	Write pulse width	10			ns	1
tALS	ALE setup time	10			ns	1
tALH	ALE hold time	5			ns	1
tDS	Data setup time	7			ns	1
tDH	Data hold time	5			ns	1
tWC	Write cycle time	20			ns	1
tWH	WE# high hold time	7			ns	1
tADL	Last address latched to data loading time during program operations	70			ns	1
tWW	WP# transition to WE# high	100			ns	1
tRR	Ready to RE# falling edge	20			ns	1
tRP	Read pulse width	10			ns	1
tRC	Read cycle time	20			ns	1
tREA	RE# access time (serial data access)			16	ns	1
tCEA	CE# access time			25	ns	1
tRLOH	RE#-low to data hold time (EDO)	5			ns	
tOH	Data output hold time	15			ns	1
tRHZ	RE#-high to output-high impedance			60	ns	1
tCHZ	CE#-high to output-high impedance			50	ns	1
tCOH	CE# high to output hold time	15			ns	
tREH	RE# high hold time	7			ns	1
tIR	Output high impedance to RE# falling edge	0			ns	1
tRHW	RE# high to WE# low	60			ns	1
tWHR	WE# high to RE# low	60			ns	1
tR	The data transfering from array to buffer			25	us	1
tWB	WE# high to busy			100	ns	1
tCLR	CLE low to RE# low	10			ns	1
tAR	ALE low to RE# low	10			ns	1
tRST	Device reset time (Idle/ Read/ Program/ Erase)			5/10/500	us	1

***Note 1**. ONFI Mode 5 compliant*

8. OPERATION MODES: LOGIC AND COMMAND TABLES

Address input, command input and data input/output are managed by the CLE, ALE, CE#, WE#, RE# and WP# signals, as shown in **Table 13. Logic Table** below.

Program, Erase, Read and Reset are four major operations modes controlled by command sets, please refer to **Table 14-1** and **14-2**.

Table 13. Logic Table

Mode	CE#	RE#	WE#	CLE	ALE	WP#
Address Input (Read Mode)	L	H	↑	L	H	X
Address Input (Write Mode)	L	H	↑	L	H	H
Command Input (Read Mode)	L	H	↑	H	L	X
Command Input (Write Mode)	L	H	↑	H	L	H
Data Input	L	H	↑	L	L	H
Data Output	L	↓	H	L	L	X
During Read (Busy)	X	H	H	L	L	X
During Programming (Busy)	X	X	X	X	X	H
During Erasing (Busy)	X	X	X	X	X	H
Program/Erase Inhibit	X	X	X	X	X	L
Stand-by	H	X	X	X	X	0V/VCC

Notes:

1. *H = VIH; L = VIL; X = VIH or VIL*
2. *WP# should be biased to CMOS high or CMOS low for stand-by.*

Table 14-1. HEX Command Table

	First Cycle	Second Cycle	Acceptable While Busy
Read Mode	00H	30H	
Random Data Input	85H	-	
Random Data Output	05H	E0H	
Cache Read Random	00H	31H	
Cache Read Sequential	31H	-	
Cache Read End	3FH	-	
ID Read	90H	-	
Parameter Page Read (ONFI)	ECH	-	
Unique ID Read (ONFI)	EDH	-	
Set Feature (ONFI)	EFH	-	
Get Feature (ONFI)	EEH	-	
Reset	FFH	-	V
Page Program	80H	10H	
Cache Program	80H	15H	
Block Erase	60H	D0H	
Status Read	70H	-	V
Status Enhanced Read (ONFI)	78H	-	V

Table 14-2. Two-plane Command Set

	First Cycle	Second Cycle	Third Cycle	Fourth Cycle
Two-plane Program (ONFI)	80H	11H	80H	10H
Two-plane Cache Program (ONFI)	80H	11H	80H	15H
Two-plane Block Erase (ONFI)	60H	D1H	60H	D0H

Caution: *None of the undefined command inputs can be accepted except for the command set in the above table.*

8-1. R/B#: Termination for The Ready/Busy# Pin (R/B#)

The R/B# is an open-drain output pin and a pull-up resistor is necessary to add on the R/B# pin. The R/B# outputs the ready/busy status of read/program/ erase operation of the device. When the R/B# is at low, the device is busy for read or program or erase operation. When the R/B# is at high, the read/program/erase operation is finished.

Rp Value Guidence

The rise time of the R/B# signal depends on the combination of Rp and capacitive loading of the R/B# circuit. It is approximately two times constants (Tc) between the 10% and 90% points on the R/B# waveform.

$$T_C = R \times C$$

Where R = R_p (Resistance of pull-up resistor), and C = C_L (Total capacitive load)

The fall time of the R/B# signal majorly depends on the output impedance of the R/B# signal and the total load capacitance.

$$Rp\ (Min.) = \frac{Vcc\ (Max.) - VOL\ (Max.)}{I_{OL} + \Sigma I_L}$$

Notes:

1. *Considering of the variation of device-by-device, the above data is for reference to decide the resistor value.*
2. *Rp maximum value depends on the maximum permissible limit of tr.*
3. *IL is the total sum of the input currents of all devices tied to the R/B pin.*

Figure 37. R/B# Pin Timing Information

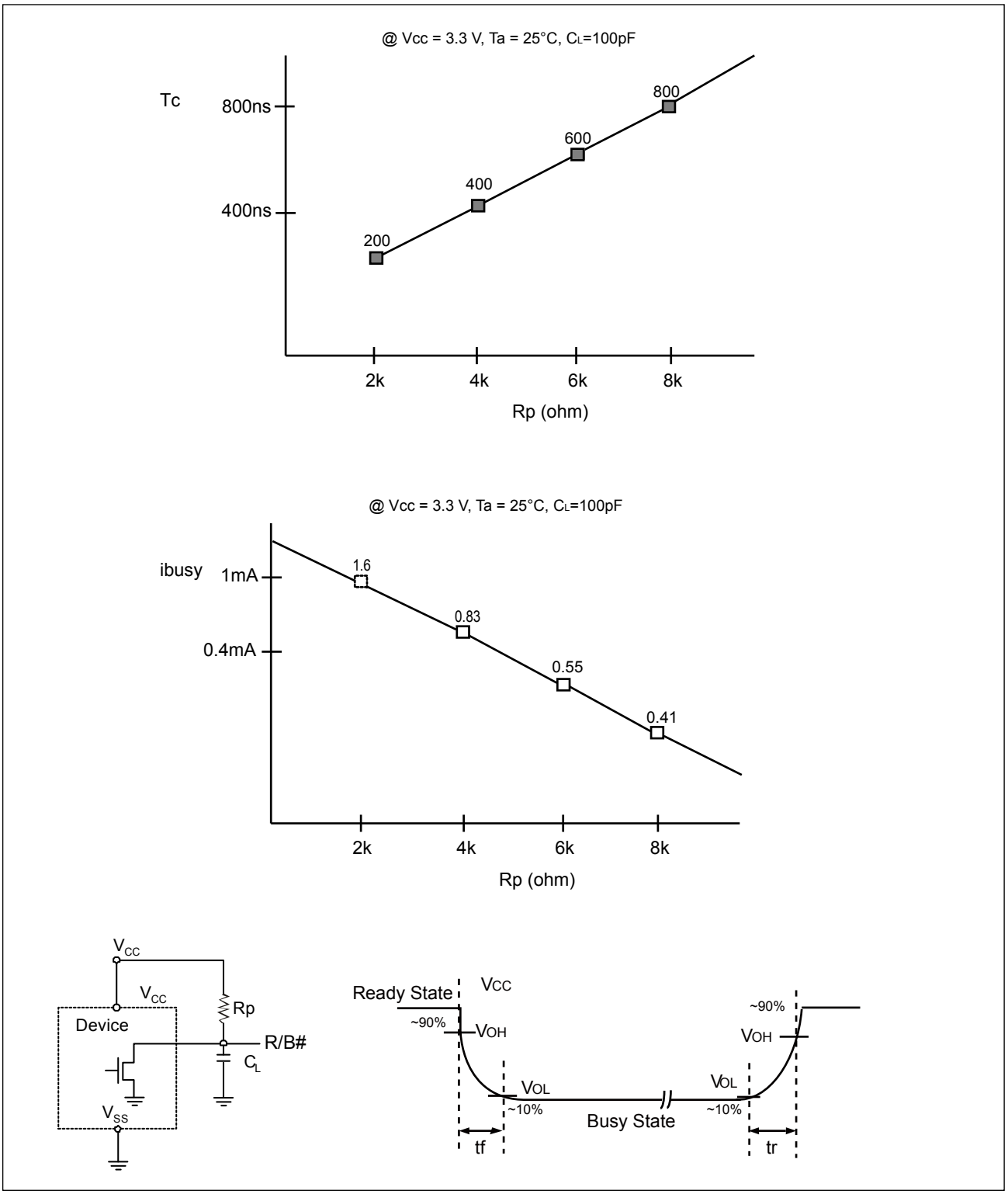

8-2. Power On/Off Sequence

After the Chip reaches the power on level (Vth = Vcc min.), the internal power on reset sequence will be triggered. During the internal power on reset period, no any external command is accepted. There are two ways to identify the termination of the internal power on reset sequence. Please refer to **Figure 48. Power On/Off Sequence**.

- R/B# pin
- Wait 1 ms

During the power on and power off sequence, it is recommended to keep the WP# = Low for internal data protection.

Figure 38. Power On/Off Sequence

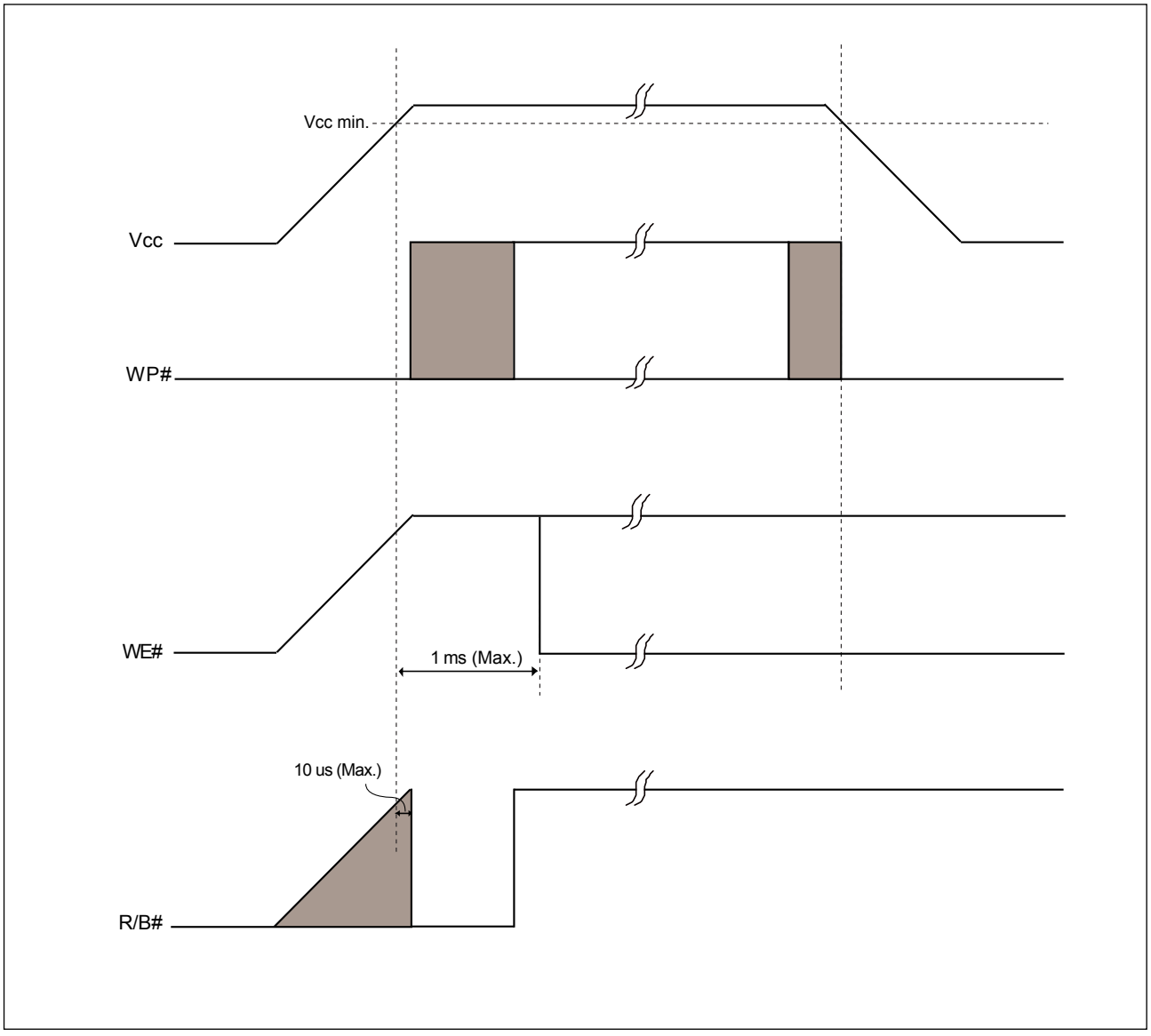

8-2-1. WP# Signal

WP# going Low can cause program and erase operations automatically reset.

The enabling & disabling of the both operations are as below:

Figure 39-1. Enable Programming of WP# Signal

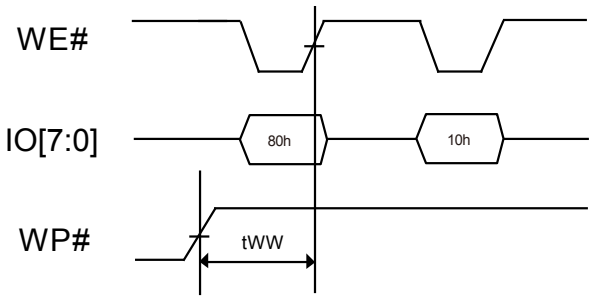

Figure 39-2. Disable Programming of WP# Signal

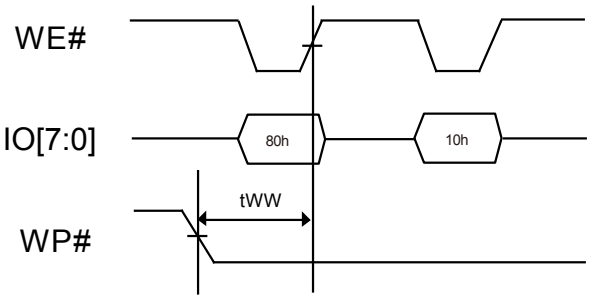

Figure 39-3. Enable Erasing of WP# Signal

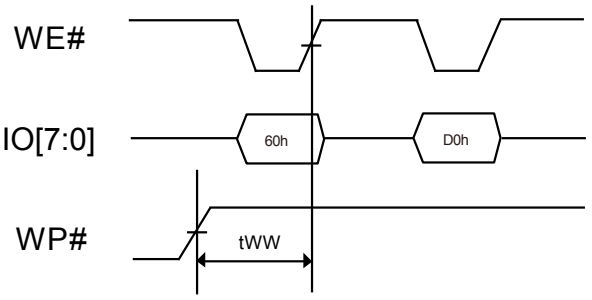

Figure 39-4. Disable Erasing of WP# Signal

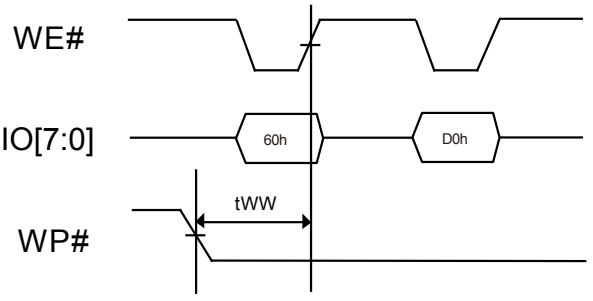

9. SOFTWARE ALGORITHM

9-1. Invalid Blocks (Bad Blocks)

The bad blocks are included in the device while it gets shipped. During the time of using the device, the additional bad blocks might be increasing; therefore, it is recommended to check the bad block marks and avoid using the bad blocks. Furthermore, please read out the bad block information before any erase operation since it may be cleared by any erase operation.

Figure 40. Bad Blocks

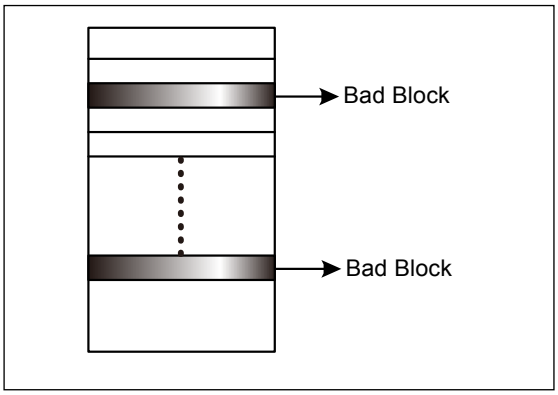

While the device is shipped, the value of all data bytes of the good blocks are FFh. The 1st byte of the 1st and 2nd page in the spare area for bad block will be 00h. The erase operation at the bad blocks is not recommended.

After the device is installed in the system, the bad block checking is recommended. The figure shows the brief test flow by the system software managing the bad blocks while the bad blocks were found. When a block gets damaged, it should not be used any more.

Due to the blocks are isolated from bit-line by the selected gate, the performance of good blocks will not be impacted by bad ones.

Table 15. Valid Blocks

	Density	Min.	Typ.	Max.	Unit	Remark
Valid (Good) Block Number	8Gb	8032		8192	Block	Block 0 is guaranteed to be good (with ECC).

Note: *the 8Gb consists of two 4Gb dies, each die has minimum 4016 valid blocks.*

9-2. Bad Block Test Flow

Although the initial bad blocks are marked by the flash vendor, they could be inadvertently erased and destroyed by a user that does not pay attention to them. To prevent this from occurring, it is necessary to always know where any bad blocks are located. Continually checking for bad block markers during normal use would be very time consuming, so it is highly recommended to initially locate all bad blocks and build a bad block table and reference it during normal NAND flash use. This will prevent having the initial bad block markers erased by an unexpected program or erase operation. Failure to keep track of bad blocks can be fatal for the application. For example, if boot code is programmed into a bad block, a boot up failure may occur. The following section shows the recommended flow for creating a bad block table.

Figure 41. Bad Block Test Flow

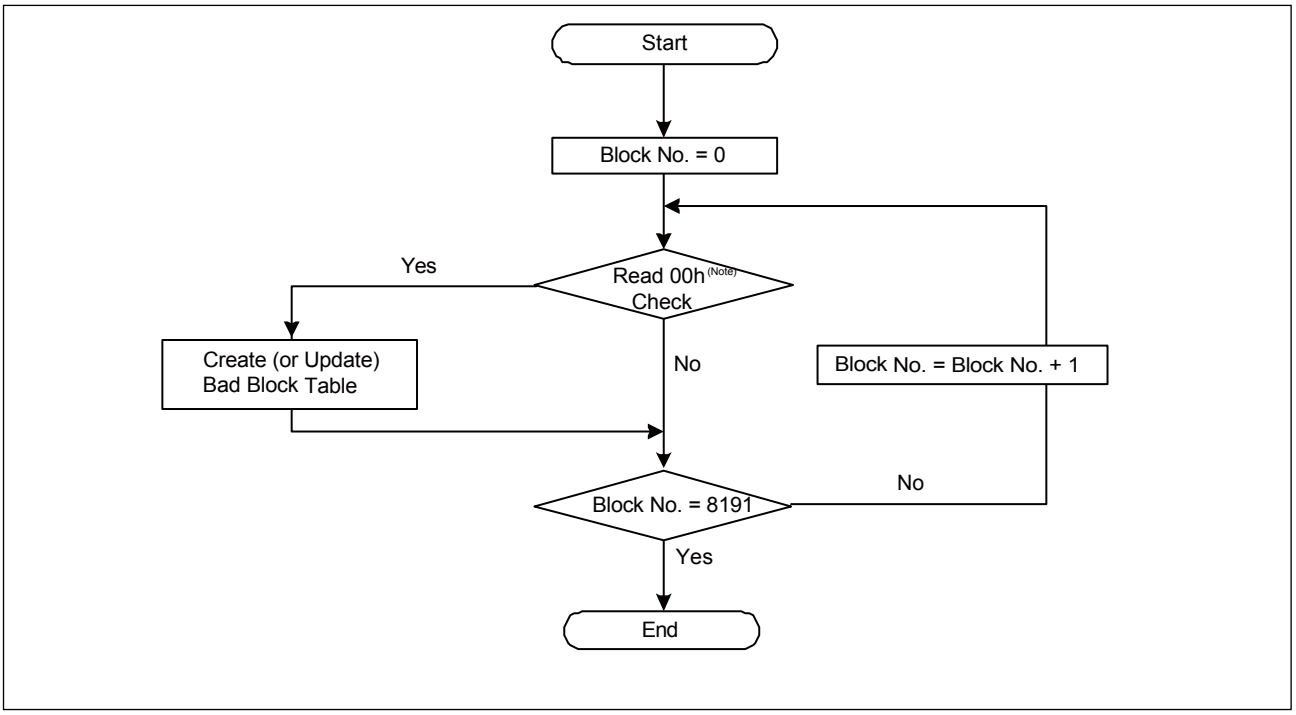

Note: *Read 00h check is at the 1st byte of the 1st and 2nd pages of the block spare area.*

9-3. Failure Phenomena for Read/Program/Erase Operations

The device may fail during a Read, Program or Erase operation. The following possible failure modes should be considered when implementing a highly reliable system:

Table 16. Failure Modes

Failure Mode	Detection and Countermeasure	Sequence
Erase Failure	Status Read after Erase	Block Replacement
Programming Failure	Status Read after Program	Block Replacement
Read Failure	Read Failure	ECC

9-4. Program

It is feasible to reprogram the data into another page (Page B) when an error occurred in Page A by loading from an external buffer. Then create a bad block table or by using another appropriate scheme to prevent further system accesses to Page A.

Figure 42. Failure Modes

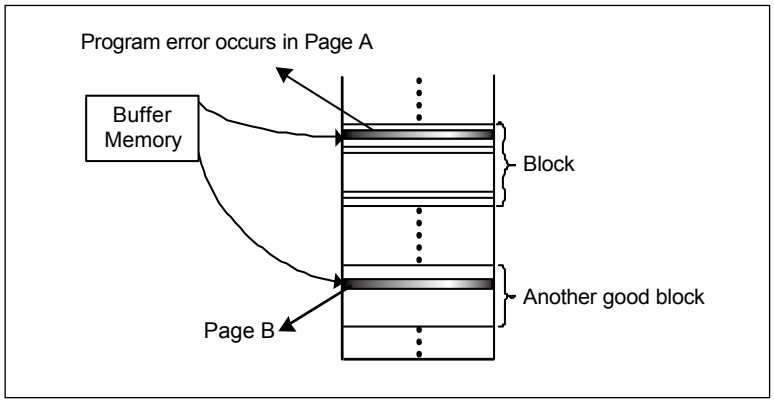

Figure 43. Program Flow Chart

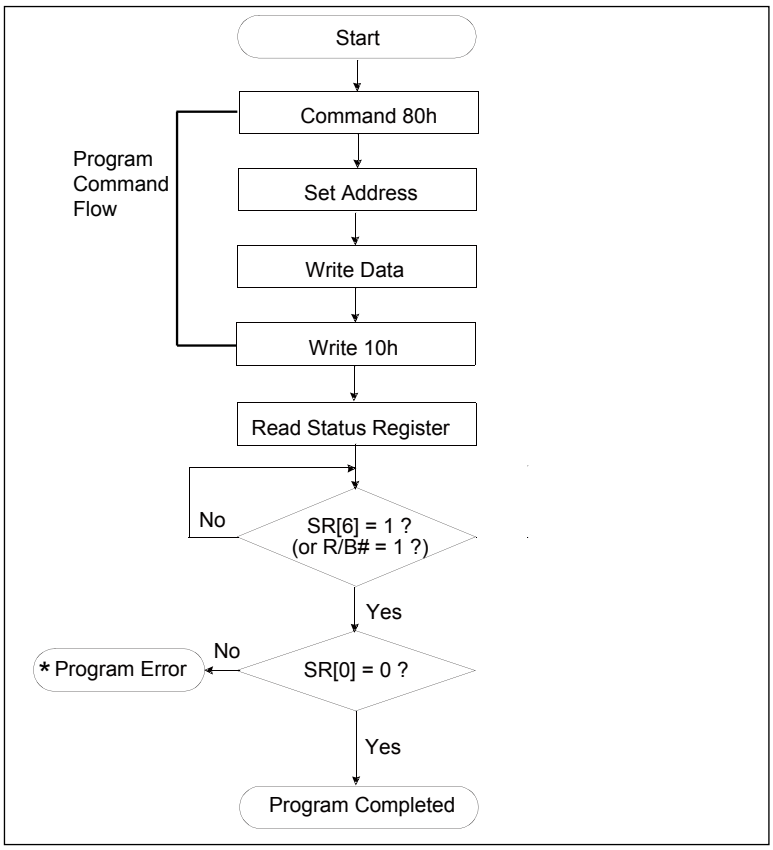

9-5. Erase

To prevent future accesses to this bad block, it is feasible to create a table within the system or by using another appropriate scheme when an error occurs in an Erase operation.

Figure 44. Erase Flow Chart

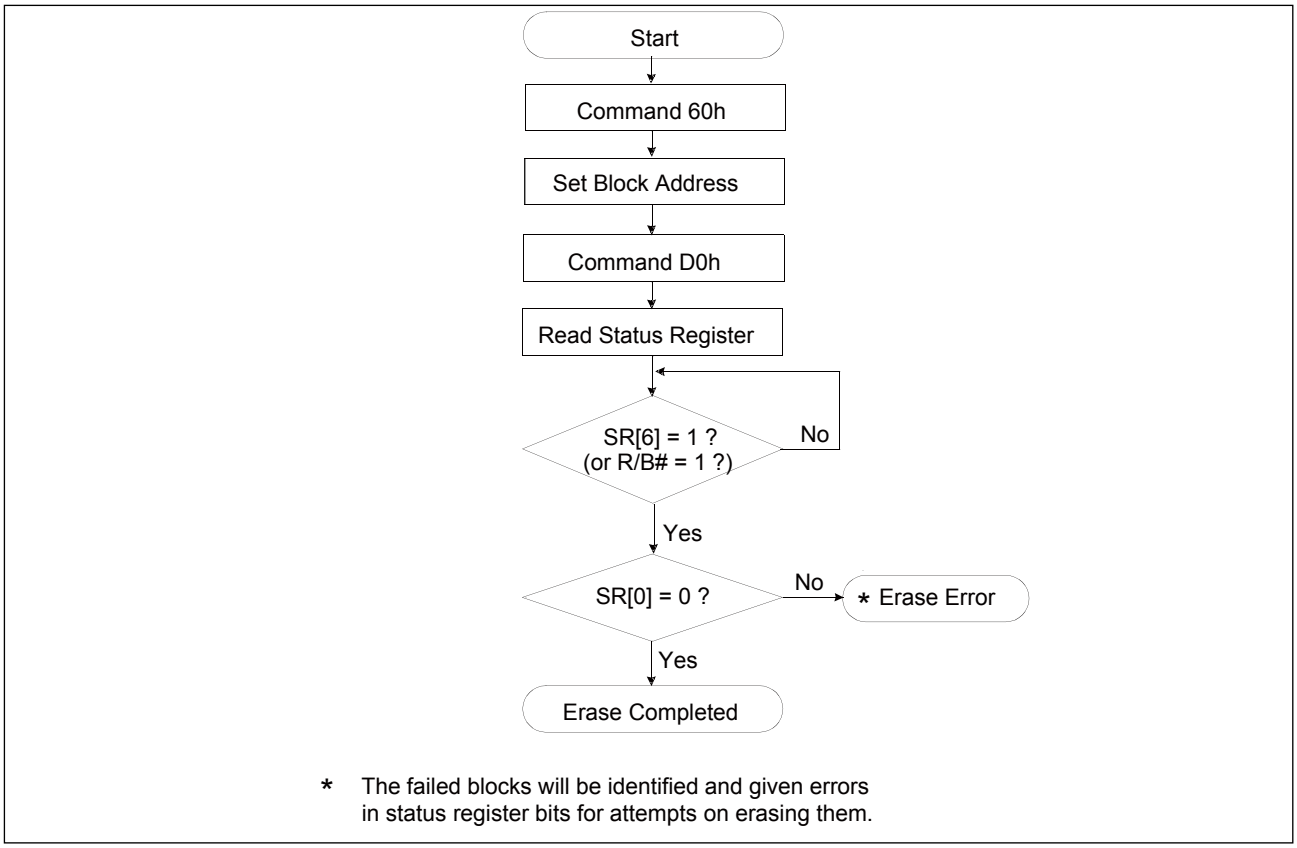

Figure 45. Read Flow Chart

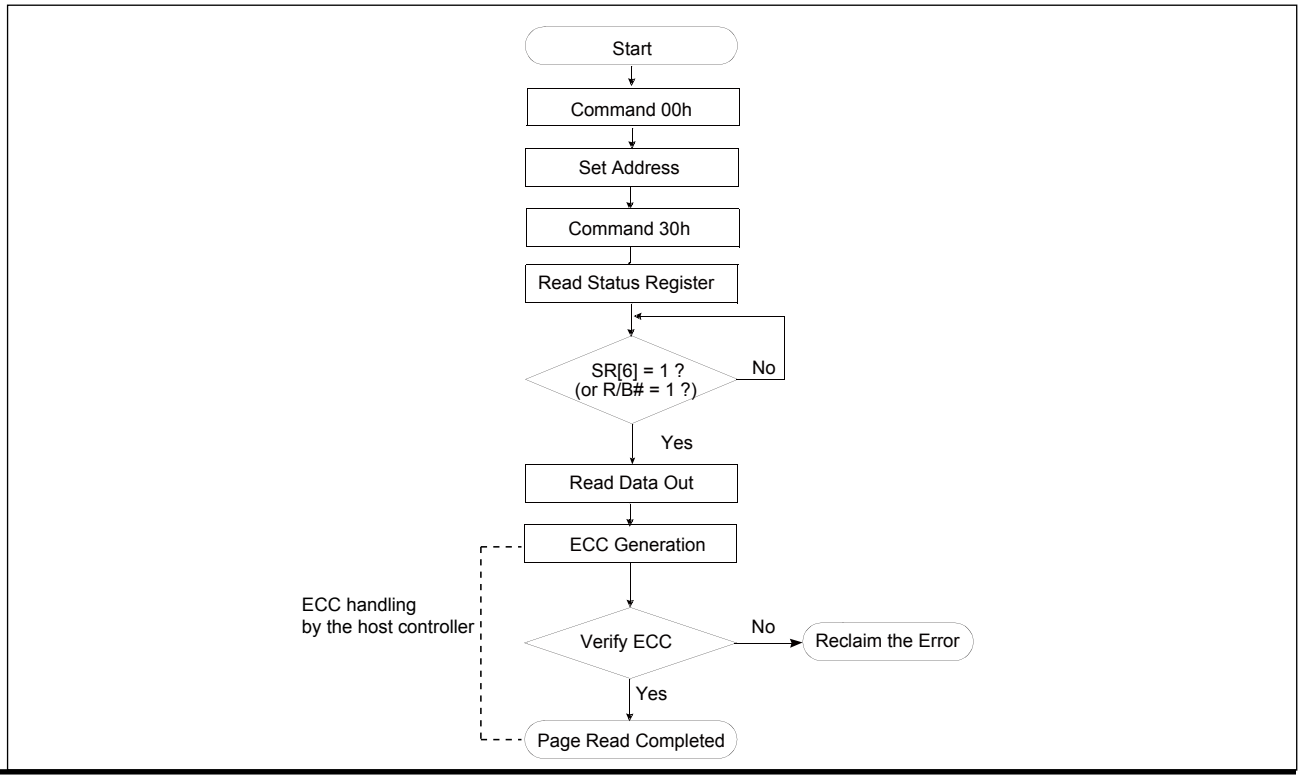

10. PACKAGE INFORMATION

Title: Package Outline for TSOP(I) 48L (12X20mm)NORMAL FORM

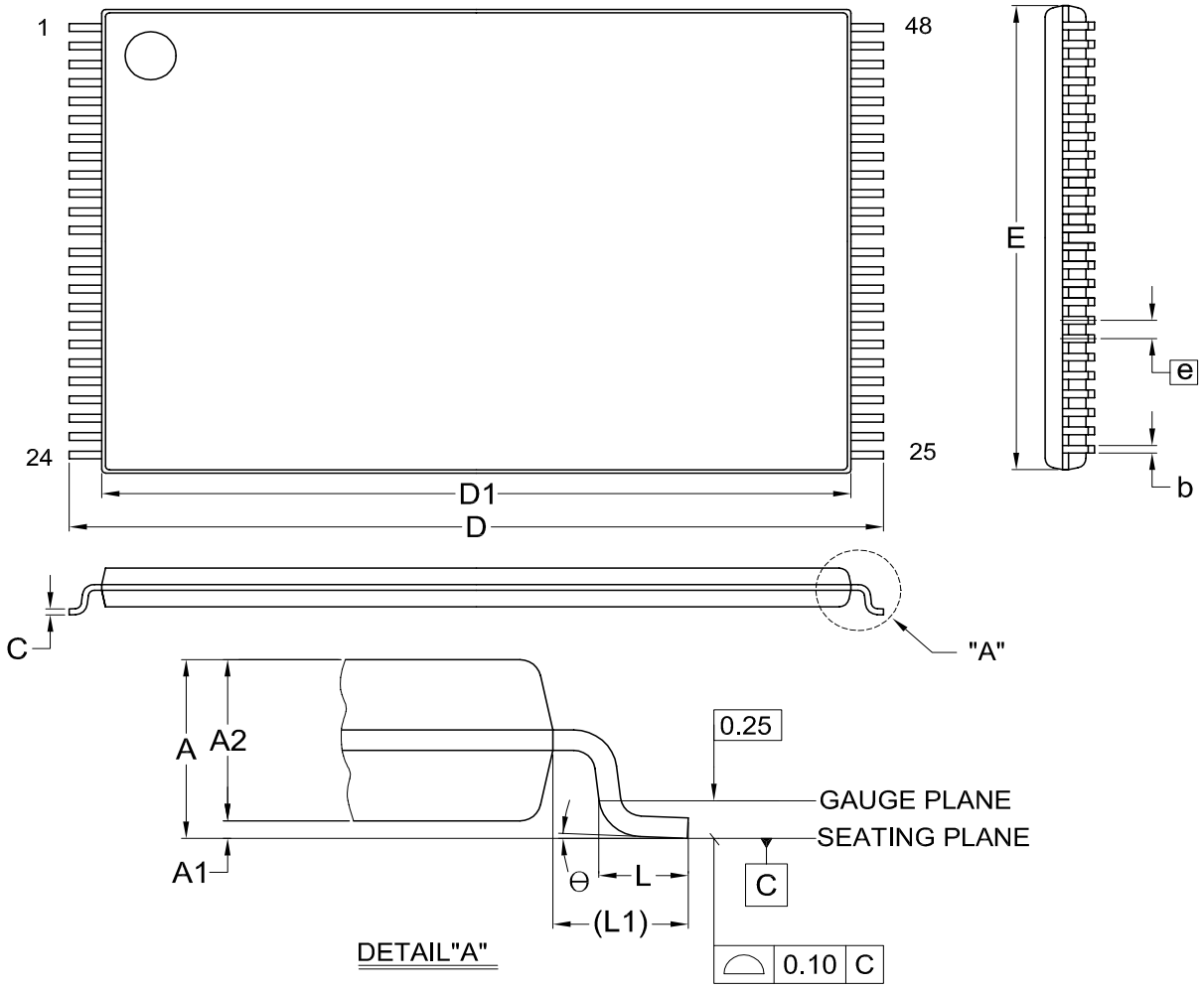

Dimensions (inch dimensions are derived from the original mm dimensions)

SYMBOL / UNIT		A	A1	A2	b	C	D	D1	E	e	L	L1	Θ
mm	Min.	—	0.05	0.95	0.17	0.10	19.80	18.30	11.90	—	0.50	0.70	0
	Nom.	---	0.10	1.00	0.20	0.13	20.00	18.40	12.00	0.50	0.60	0.80	5
	Max.	1.20	0.15	1.05	0.27	0.21	20.20	18.50	12.10	—	0.70	0.90	8
Inch	Min.	---	0.002	0.037	0.007	0.004	0.780	0.720	0.469	—	0.020	0.028	0
	Nom.	---	0.004	0.039	0.008	0.005	0.787	0.724	0.472	0.020	0.024	0.031	5
	Max.	0.047	0.006	0.041	0.011	0.008	0.795	0.728	0.476	—	0.028	0.035	8

DWG.NO.	REVISION	REFERENCE			ISSUE DATE
		JEDEC	EIAJ		
6110-1607	8	MO-142			2007/08/03

Title: Package Outline for 63-VFBGA (9x11x1.0mm, Ball-pitch: 0.8mm, Ball-diameter: 0.45mm)

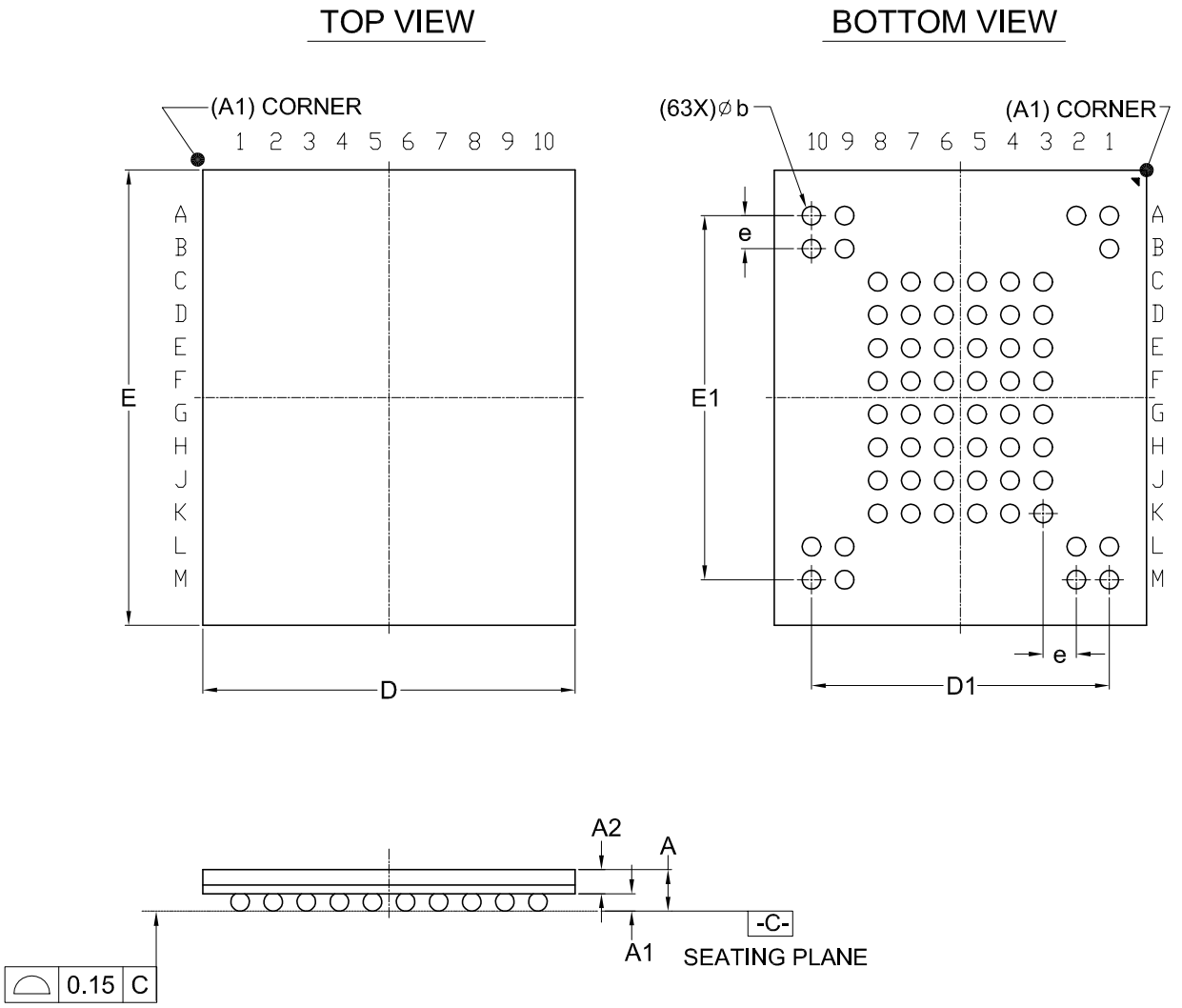

Dimensions (inch dimensions are derived from the original mm dimensions)

SYMBOL / UNIT		A	A1	A2	b	D	D1	E	E1	e
mm	Min.	---	0.25	0.55	0.40	8.90	---	10.90	—	—
	Nom.	---	0.30	—	0.45	9.00	7.20	11.00	8.80	0.80
	Max.	1.00	0.40	—	0.50	9.10	---	11.10	—	—
Inch	Min.	—	0.010	0.022	0.016	0.350	---	0.429	—	—
	Nom.	—	0.012	—	0.018	0.354	0.283	0.433	0.346	0.031
	Max.	0.039	0.016	—	0.020	0.358	---	0.437	—	—

Dwg. No.	Revision	Reference			
		JEDEC	EIAJ		
6110-4267	0				

11. REVISION HISTORY

Rev. No.	Descriptions	Page	Date
0.01	1. Added interleaved operation waveforms	P60-63	JAN/14/2015
	2. Corrected waveform of OTP protection tWB timing from WE# high to busy	P54	
	3. Revised the bad block mark from non-FFh to 00h, also revised the page of bad block mark from 1st or 2nd page to 1st and 2nd page	P74-75	
0.02	1. Changed title from "Advanced information" to "Preliminary"	ALL	FEB/02/2015
1.0	1. Removed "Preliminary" title	ALL	MAR/16/2015

Except for customized products which have been expressly identified in the applicable agreement, Macronix's products are designed, developed, and/or manufactured for ordinary business, industrial, personal, and/or household applications only, and not for use in any applications which may, directly or indirectly, cause death, personal injury, or severe property damages. In the event Macronix products are used in contradicted to their target usage above, the buyer shall take any and all actions to ensure said Macronix's product qualified for its actual use in accordance with the applicable laws and regulations; and Macronix as well as it's suppliers and/or distributors shall be released from any and all liability arisen therefrom.

Copyright© Macronix International Co., Ltd. 2015. All rights reserved, including the trademarks and tradename thereof, such as Macronix, MXIC, MXIC Logo, MX Logo, Integrated Solutions Provider, NBit, Nbit, NBiit, Macronix NBit, eLite-Flash, HybridNVM, HybridFlash, XtraROM, Phines, KH Logo, BE-SONOS, KSMC, Kingtech, MXSMIO, Macronix vEE, Macronix MAP, Rich Audio, Rich Book, Rich TV, and FitCAM. The names and brands of third party referred thereto (if any) are for identification purposes only.

For the contact and order information, please visit Macronix's Web site at: http://www.macronix.com