1G/2G/4G-bit NAND Flash Memory
(ECC-Free)
MX30LFxGE8AB

Contents

1. FEATURES 6

2. GENERAL DESCRIPTIONS 7

Figure 1. Logic Diagram 7

2-1. ORDERING INFORMATION 8

3. PIN CONFIGURATIONS 9

3-1. PIN DESCRIPTIONS 11

4. BLOCK DIAGRAM 13

5. SCHEMATIC CELL LAYOUT AND ADDRESS ASSIGNMENT 14

Table 1. Address Allocation: MX30LFxGE8AB 14

6. DEVICE OPERATIONS 15

6-1. Address Input/Command Input/Data Input 15

Figure 2. AC Waveforms for Command / Address / Data Latch Timing 15
Figure 3. AC Waveforms for Address Input Cycle 15
Figure 4. AC Waveforms for Command Input Cycle 16
Figure 5. AC Waveforms for Data Input Cycle 16

6-2. Page Read 17

Figure 6. AC Waveforms for Read Cycle 17
Figure 7. AC Waveforms for Read Operation (Intercepted by CE#) 18
Figure 8. AC Waveforms for Read Operation (with CE# Don't Care) 19
Figure 9-1. AC Waveforms for Sequential Data Out Cycle (After Read) 19
Figure 9-2. AC Waveforms for Sequential Data Out Cycle (After Read) - EDO Mode 20
Figure 10. AC Waveforms for Random Data Output 21

6-3. Page Program 22

Figure 11. AC Waveforms for Program Operation after Command 80H 22
Figure 12. AC Waveforms for Random Data In (For Page Program) 23
Figure 13. AC Waveforms for Program Operation with CE# Don't Care 24

6-4. Cache Program 25

Figure 14-1. AC Waveforms for Cache Program 26
Figure 14-2. AC Waveforms for Sequence of Cache Program 27

6-5. Block Erase 28

Figure 15. AC Waveforms for Erase Operation 28

6-6. ID Read 29
Table 2. ID Codes Read Out by ID Read Command 90H 29
Table 3. The Definition of Byte2~Byte4 of ID Table 30
Figure 16-1. AC Waveforms for ID Read Operation 31
Figure 16-2. AC Waveforms for ID Read (ONFI Identifier) Operation 31
6-7. Status Read 32
Table 4-1. Status Output 32
Table 4-2. ECC Bits Status 32
Figure 17. Bit Assignment (HEX Data) 33
Figure 18. AC Waveforms for Status Read Operation 33
6-8. Status Enhance Read 34
Figure 19. AC Waveforms for Status Enhance Operation 34
6-9. Reset 35
Figure 20. AC waveforms for Reset Operation 35
6-10. Parameter Page Read (ONFI) 36
Figure 21. AC waveforms for Parameter Page Read (ONFI) Operation 36
Figure 22. AC Waveforms for Parameter Page Read (ONFI) Random Operation (For 05h-E0h) 37
Table 5. Parameter Page (ONFI) 38
6-11. Unique ID Read (ONFI) 40
Figure 23. AC waveforms for Unique ID Read Operation 41
Figure 24. AC waveforms for Unique ID Read Operation (For 05h-E0h) 42
6-12. Feature Set Operation (ONFI) 43
Table 6-1. Definition of Feature Address 43
Table 6-2. Sub-Feature Parameter Table of Feature Address - 90h (Array Operation Mode) 43
6-12-1. Set Feature (ONFI) 44
Figure 25. AC Waveforms for Set Feature (ONFI) Operation 44
6-12-2. Get Feature (ONFI) 45
Figure 26. AC Waveforms for Get Feature (ONFI) Operation 45
6-12-3. Secure OTP (One-Time-Programmable) Feature 46
Figure 27. AC Waveforms for OTP Data Read 46
Figure 28. AC Waveforms for OTP Data Read with Random Data Output 47
Figure 29. AC Waveforms for OTP Data Program 48
Figure 30. AC Waveforms for OTP Data Program with Random Data Input 49
Figure 31. AC Waveforms for OTP Protection Operation 50
6-12-4. Internal ECC Always Enabled 51
Table 7-1 For 4Gb, the Distribution of ECC Segment and Spare Area in a Page 51
Table 7-2 For 1Gb/2Gb, the Distribution of ECC Segment and Spare Area in a Page 51

6-13. Two-Plane Operations 52
6-14. Two-plane Program (ONFI) and Two-plane Cache Program (ONFI) 52
Figure 32-1. AC Waveforms for Two-plane Program (ONFI) 53
Figure 32-2. AC Waveforms for Page Program Random Data Two-plane (ONFI) 54
Figure 33. AC Waveforms for Two-plane Cache Program (ONFI) 55
Figure 34. AC Waveforms for Two-plane Erase (ONFI) 56
6-15. Two-plane Block Erase (ONFI) 56
7. PARAMETERS 57
7-1. ABSOLUTE MAXIMUM RATINGS 57
Table 8. Operating Range 58
Table 9. DC Characteristics 58
Table 10. Capacitance 59
Table 11. AC Testing Conditions 59
Table 12. Program and Erase Characteristics 59
Table 13. AC Characteristics 60
8. OPERATION MODES: LOGIC AND COMMAND TABLES 61
Table 14. Logic Table 61
Table 15-1. HEX Command Table 62
Table 15-2. Two-plane Command Set (For 2Gb/4Gb) 62
8-1. R/B#: Termination for The Ready/Busy# Pin (R/B#) 63
Figure 35. R/B# Pin Timing Information 64
8-2. Power On/Off Sequence 65
Figure 36. Power On/Off Sequence 65
8-2-1. WP# Signal 66
Figure 37-1. Enable Programming of WP# Signal 66
Figure 37-2. Disable Programming of WP# Signal 66
Figure 37-3. Enable Erasing of WP# Signal 66
Figure 37-4. Disable Erasing of WP# Signal 66
9. SOFTWARE ALGORITHM 67
9-1. Invalid Blocks (Bad Blocks) 67
Figure 38. Bad Blocks 67
Table 16. Valid Blocks 67
9-2. Bad Block Test Flow 68
Figure 39. Bad Block Test Flow 68
9-3. Failure Phenomena for Read/Program/Erase Operations 69
Table 17. Failure Modes 69

9-4. Program 70
Figure 40. Failure Modes 70
Figure 41. Program Flow Chart 70
9-5. Erase 70
Figure 42. Erase Flow Chart 71
Figure 43. Read Flow Chart 71
10. PACKAGE INFORMATION 72
11. REVISION HISTORY 74

1. FEATURES

- 1G-bit/2G-bit/4G-bit SLC NAND Flash
  - Bus: x8
  - Page size: (2048+64)byte
  - Block size: (128K+4K)byte
  - Plane size:
    1024-block/plane x 1 for 1Gb
    1024-block/plane x 2 for 2Gb
    2048-block/plane x 2 for 4Gb
- **ONFI 1.0 compliant**
- **Multiplexed Command/Address/Data**
- **User Redundancy**
  - 64-byte attached to each page
- **Fast Read Access**
  - Latency of array to register: 45us (typ.)
  - Sequential read: 20ns
- **Page Program Operation**
  - Page program time: 320us (typ.)
- **Cache Program Support**
- **Block Erase Operation**
  - Block erase time: 1ms (typ.)
- **Single Voltage Operation:**
  - VCC: 2.7 ~ 3.6V
- **Low Power Dissipation**
  - Max. 30mA
    Active current (Read/Program/Erase)
- **Sleep Mode**
  - 50uA (Max.) standby current
- **Hardware Data Protection:** WP# pin
- **Device Status Indicators**
  - Ready/Busy (R/B#) pin
  - Status Register
- **Chip Enable Don't Care**
  - Simplify System Interface
- **Unique ID Read support (ONFI)**
- **Secure OTP support**
- **Electronic Signature**
- **High Reliability**
  - Internal ECC logic always enabling
  - Typical 100K P/E endurance cycle
  - Data Retention: 10 years
- **Wide Temperature Operating Range**
  -40°C to +85°C
- **Package:**
  - 48-TSOP(I) (12mm x 20mm)
  - 63-ball 9mmx11mm VFBGA (For 1Gb)

  All packaged devices are RoHS Compliant and Halogen-free.

2. GENERAL DESCRIPTIONS

The MX30LFxGE8AB is a 1Gb to 4Gb SLC NAND Flash memory device. Its standard NAND Flash features and reliable quality make it most suitable for embedded system code and data storage.

The product family does not require the host controller to support ECC since there is an internal ECC logic inside the Flash device for the error correction and detection.

The MX30LFxGE8AB is typically accessed in pages of 2,112 bytes both for read and for program operations.

The MX30LFxGE8AB array is organized as thousands of blocks, which is composed by 64 pages of (2,048+64) bytes in two NAND strings structure with 32 serial connected cells in each string. Each page has an additional 64 bytes for bad block marks and other purposes. The device has an on-chip buffer of 2,112 bytes for data load and access.

The MX30LFxGE8AB power consumption is 30mA during all modes of operations (Read/Program/Erase), and 50uA in standby mode.

Figure 1. Logic Diagram

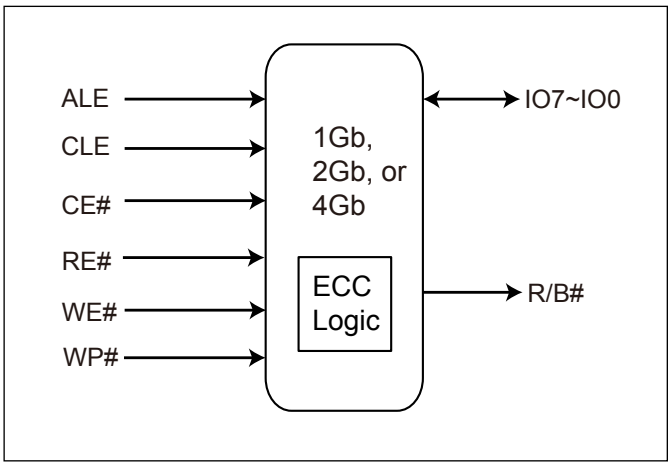

2-1. ORDERING INFORMATION

Part Name Description

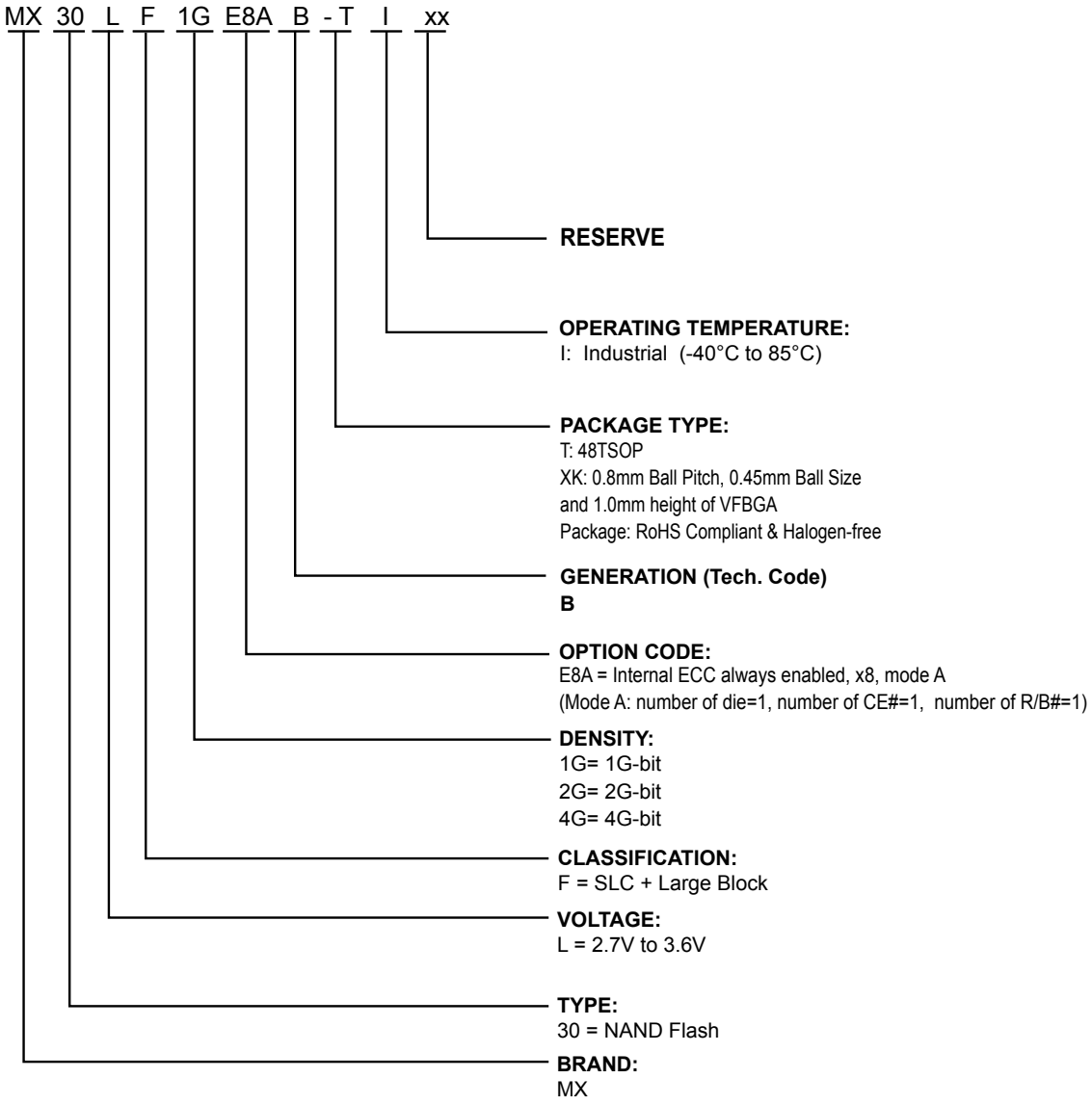

Part Number	Density	Organization	VCC Range	Package	Temperature Grade
MX30LF1GE8AB-TI	1Gb	x8	3V	48-TSOP	Industrial
MX30LF1GE8AB-XKI	1Gb	x8	3V	63-VFBGA	Industrial
MX30LF2GE8AB-TI	2Gb	x8	3V	48-TSOP	Industrial
MX30LF4GE8AB-TI	4Gb	x8	3V	48-TSOP	Industrial

3. PIN CONFIGURATIONS

48-TSOP

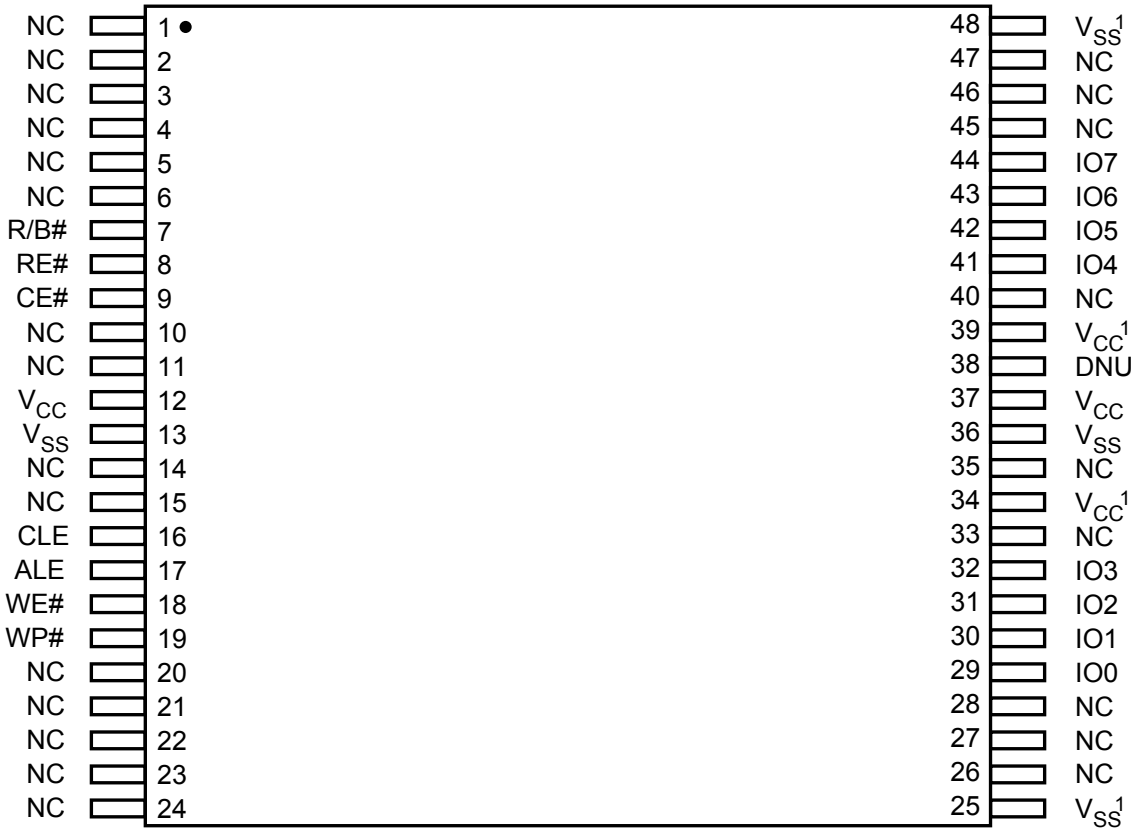

***Note** 1: These pins might not be connected internally. However, it is recommended to connect these pins to power (or ground) as designated for ONFI compatibility.*

63-ball 9mmx11mm VFBGA

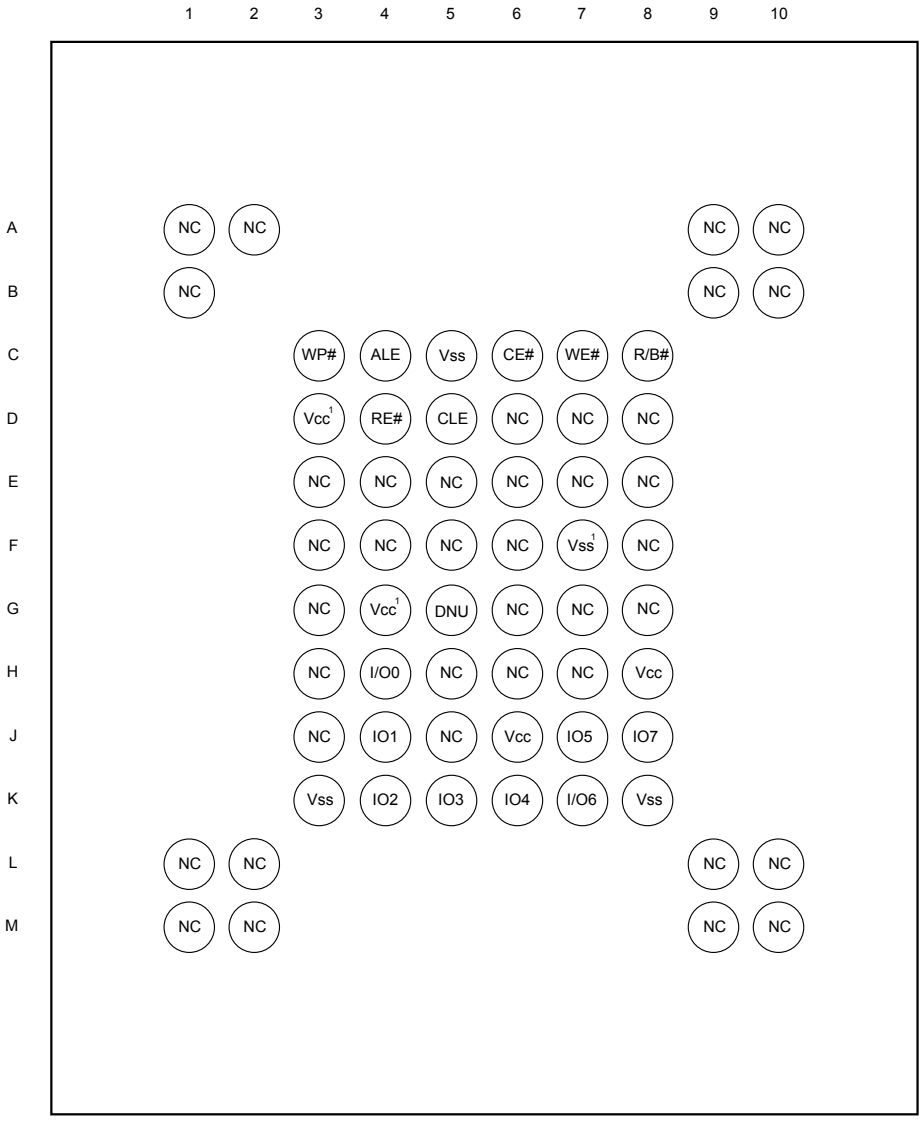

Note 1. *These pins might not be connected internally; however, it is recommended to connect these pins to power (or ground) as designated for ONFI compatibility.*

3-1. PIN DESCRIPTIONS

SYMBOL	PIN NAME
IO7 - IO0	Data I/O port: IO7-IO0
CE#	Chip Enable (Active Low)
RE#	Read Enable (Active Low)
WE#	Write Enable (Active Low)
CLE	Command Latch Enable
ALE	Address Latch Enable
WP#	Write Protect (Active Low)
R/B#	Ready/Busy (Open Drain)
VSS	Ground
VCC	Power Supply for Device Operation
NC	Not Connected Internally
DNU	Do Not Use (Do Not Connect)

PIN FUNCTIONS

The MX30LFxGE8AB device is a sequential access memory that utilizes multiplexing input of Command/Address/Data.

I/O PORT: IO7- IO0

The IO7 to IO0 pins are for address/command input and data output to and from the device.

CHIP ENABLE: CE#

The device goes into low-power Standby Mode when CE# goes high during a read operation and not at busy stage.

The CE# goes low to enable the device to be ready for standard operation. When the CE# goes high, the device is deselected. However, when the device is at busy stage, the device will not go to standby mode when CE# pin goes high.

READ ENABLE: RE#

The RE# (Read Enable) allows the data to be output by a tREA time after the falling edge of RE#. The internal address counter is automatically increased by one at the falling edge of RE#.

WRITE ENABLE: WE#

When the WE# goes low, the address/data/command are latched at the rising edge of WE#.

COMMAND LATCH ENABLE: CLE

The CLE controls the command input. When the CLE goes high, the command data is latched at the rising edge of the WE#.

ADDRESS LATCH ENABLE: ALE

The ALE controls the address input. When the ALE goes high, the address is latched at the rising edge of WE#.

WRITE PROTECT: WP#

The WP# signal keeps low and then the memory will not accept the program/erase operation. It is recommended to keep WP# pin low during power on/off sequence. Please refer to the waveform of "Power On/Off Sequence".

READY/Busy: R/B#

The R/B# is an open-drain output pin. The R/B# outputs the ready/busy status of read/program/erase operation of the device. When the R/B# is at low, the device is busy for read or program or erase operation. When the R/B# is at high, the read/program/erase operation is finished.

Please refer to **Section 8-1** for details.

4. BLOCK DIAGRAM

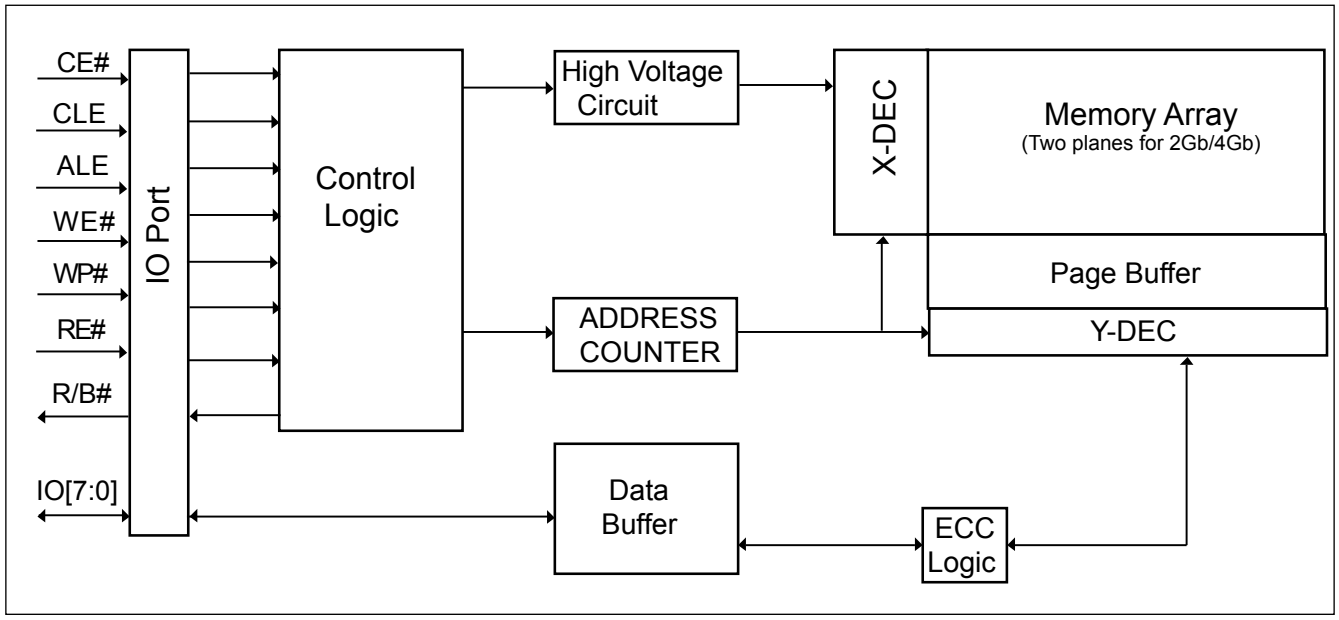

5. SCHEMATIC CELL LAYOUT AND ADDRESS ASSIGNMENT

MX30LFxGE8AB NAND device is divided into two planes for 2Gb and 4Gb (the 1Gb is single plane), which is composed by 64 pages of (2,048+64)-byte in two NAND strings structure with 32 serial connected cells in each string. Each page has an additional 64 bytes for bad block marks and other purposes. The device has an on-chip buffer of 2,112 bytes for data load and access. Each 2K-Byte page has the two area, one is the main area which is 2048-bytes and the other is spare area which is 64-byte.

There are four (for 1Gb) or five (for 2Gb/4Gb) address cycles for the address allocation, please refer to the table below.

Table 1. Address Allocation: MX30LFxGE8AB

Addresses	IO7	IO6	IO5	IO4	IO3	IO2	IO1	IO0
Column address - 1st cycle	A7	A6	A5	A4	A3	A2	A1	A0
Column address - 2nd cycle	L	L	L	L	A11	A10	A9	A8
Row address - 3rd cycle	A19	A18[1]	A17	A16	A15	A14	A13	A12
Row address - 4th cycle	A27	A26	A25	A24	A23	A22	A21	A20
Row address - 5th cycle[4]	L	L	L	L	L	L	A29[3]	A28[2]

Notes:

1. *A18 is the plane selection for 2Gb/4Gb.*
2. *A28 is for 2Gb and 4Gb.*
3. *A29 is for 4Gb, "L" (Low) for 2Gb.*
4. *The 5th cycle is for 2Gb/4Gb.*

6. DEVICE OPERATIONS

6-1. Address Input/Command Input/Data Input

Address input bus operation is for address input to select the memory address. The command input bus operation is for giving command to the memory. The data input bus is for data input to the memory device.

Figure 2. AC Waveforms for Command / Address / Data Latch Timing

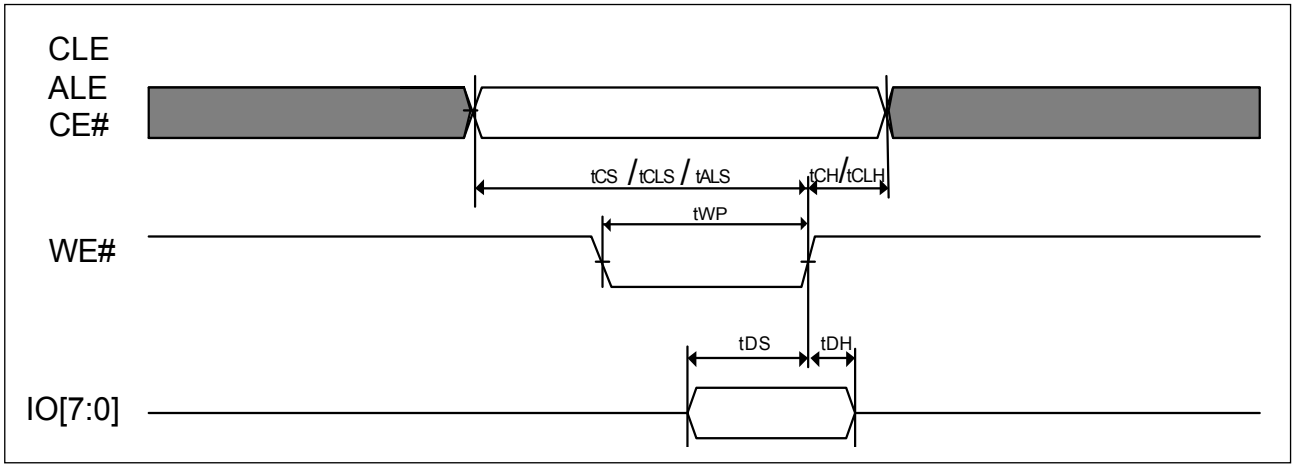

Figure 3. AC Waveforms for Address Input Cycle

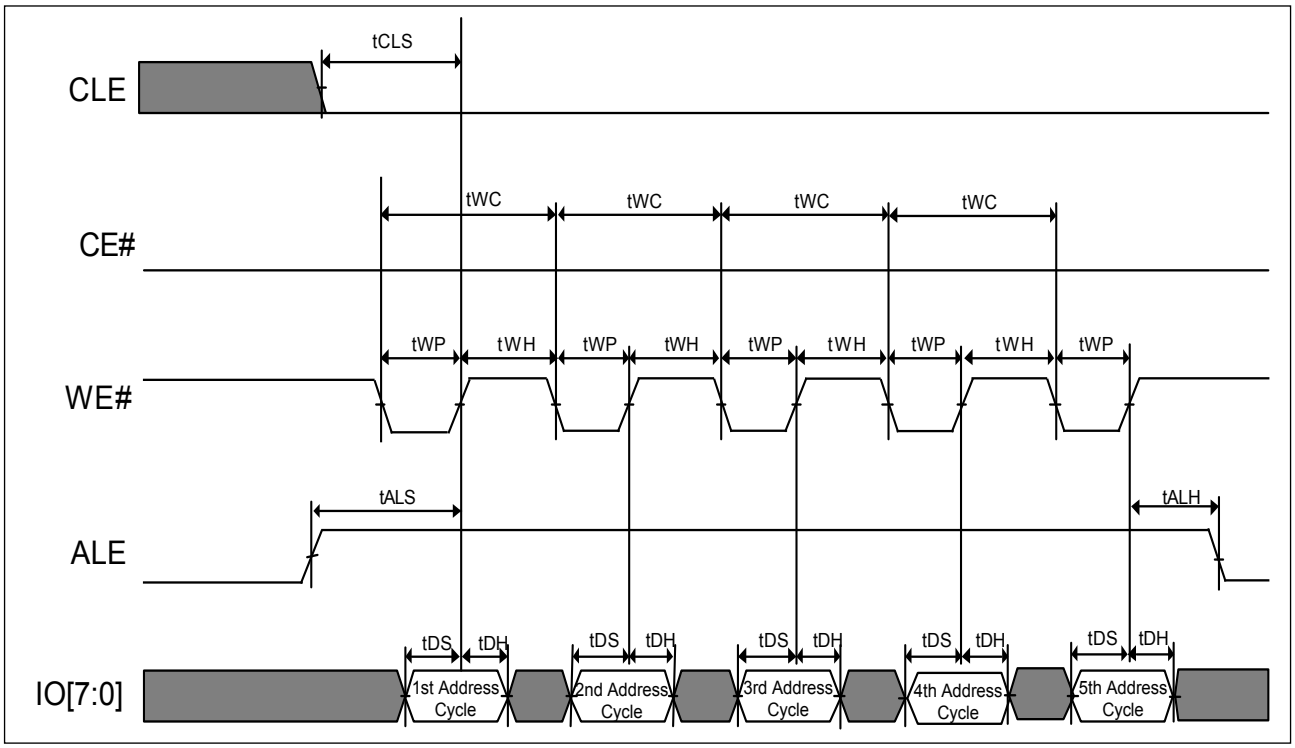

Figure 4. AC Waveforms for Command Input Cycle

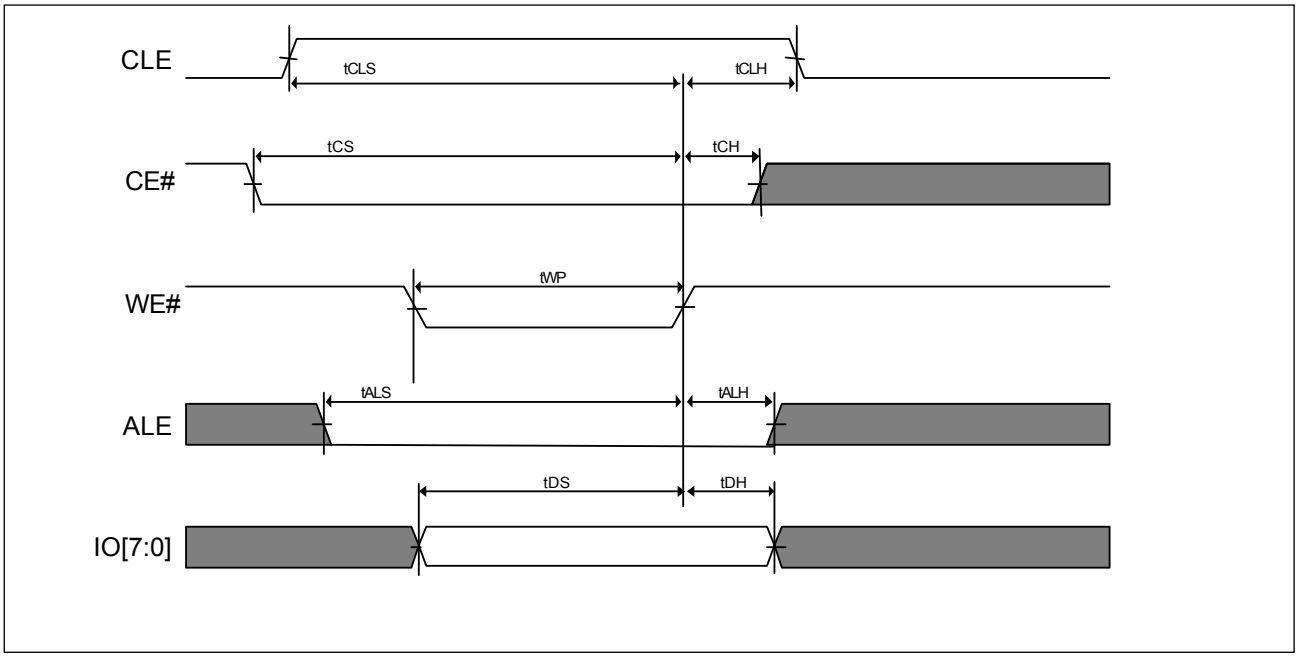

Figure 5. AC Waveforms for Data Input Cycle

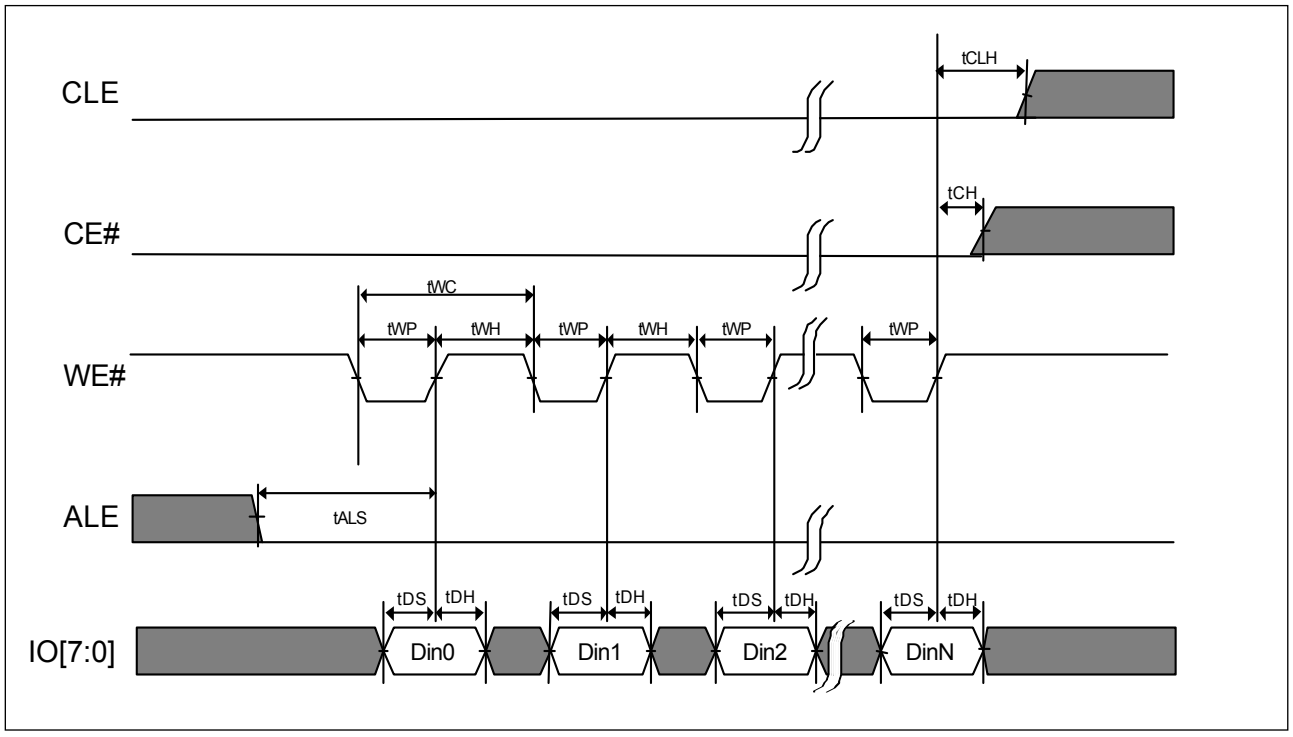

6-2. Page Read

The MX30LFxGE8AB array is accessed in Page of 2,112 bytes. External reads begins after the R/B# pin goes to READY.

The Read operation may also be initiated by writing the 00h command and giving the address (column and row address) and being confirmed by the 30h command, the MX30LFxGE8AB begins the internal read operation and the chip enters busy state. The data can be read out in sequence after the chip is ready. Refer to the waveform for Read Operation as below.

If the host side uses a sequential access time (tRC) of less than 30ns, the data can be latched on the next falling edge of RE# as the waveform of EDO mode (**Figure 9-2**).

To access the data in the same page randomly, a command of 05h may be written and only column address following and then confirmed by E0h command.

Figure 6. AC Waveforms for Read Cycle

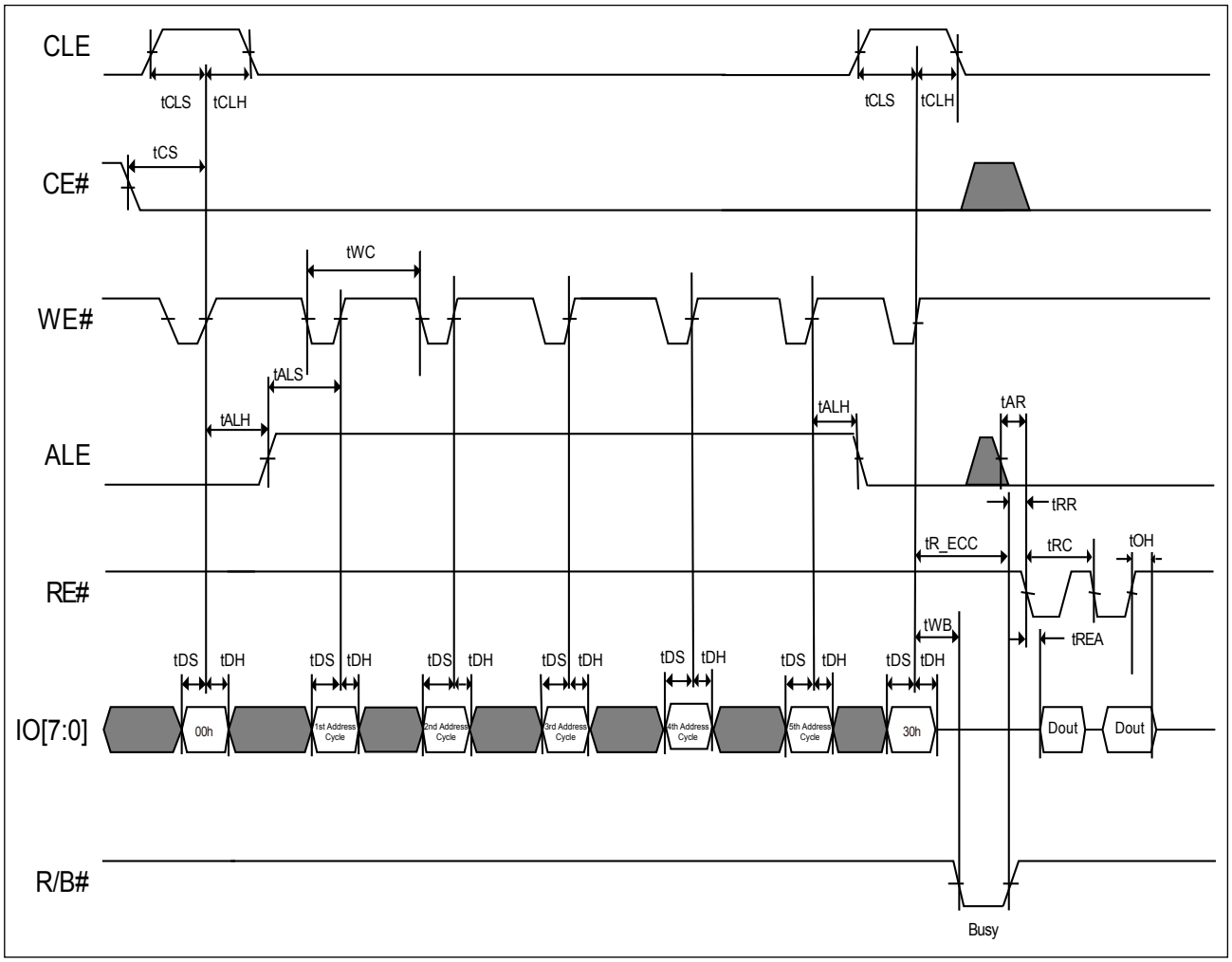

Figure 7. AC Waveforms for Read Operation (Intercepted by CE#)

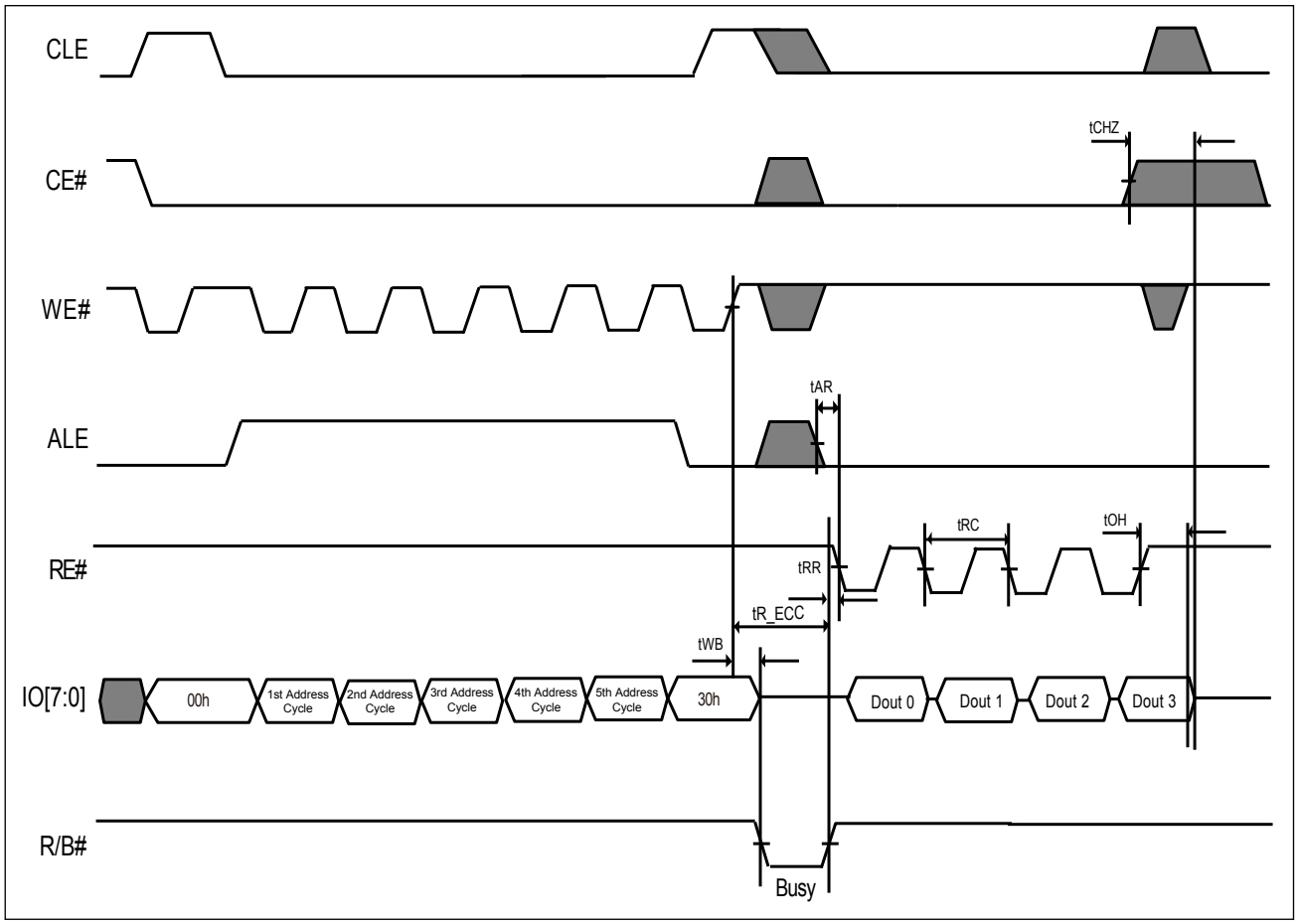

Figure 8. AC Waveforms for Read Operation (with CE# Don't Care)

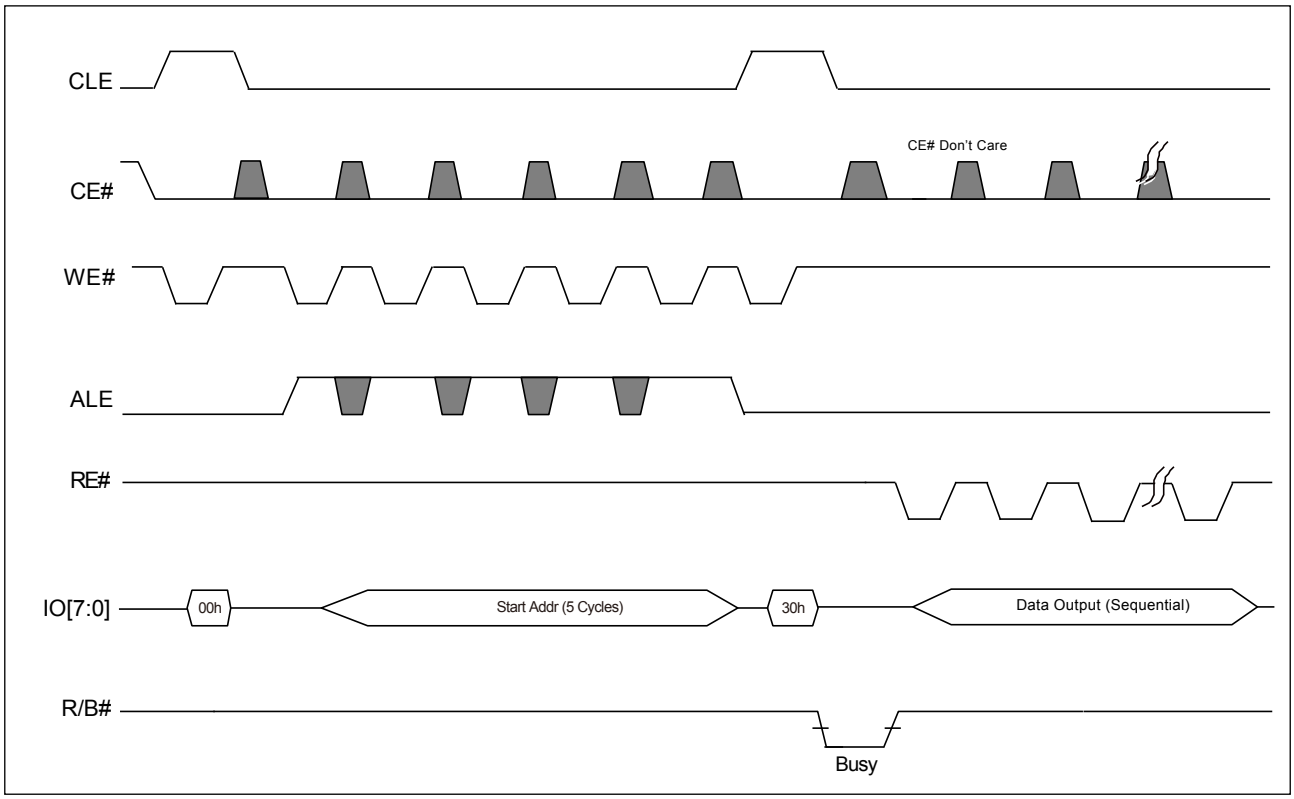

Note: *The CE# "Don't Care" feature may simplify the system interface, which allows controller to directly download the code from flash device, and the CE# transitions will not stop the read operation during the latency time.*

Figure 9-1. AC Waveforms for Sequential Data Out Cycle (After Read)

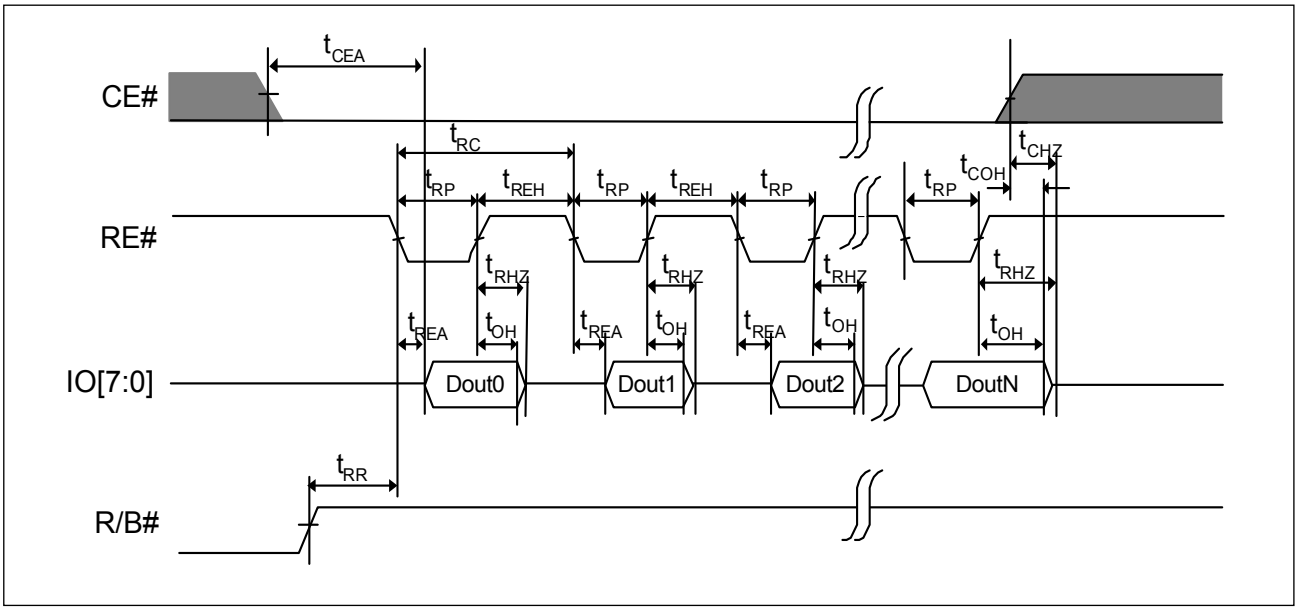

Figure 9-2. AC Waveforms for Sequential Data Out Cycle (After Read) - EDO Mode

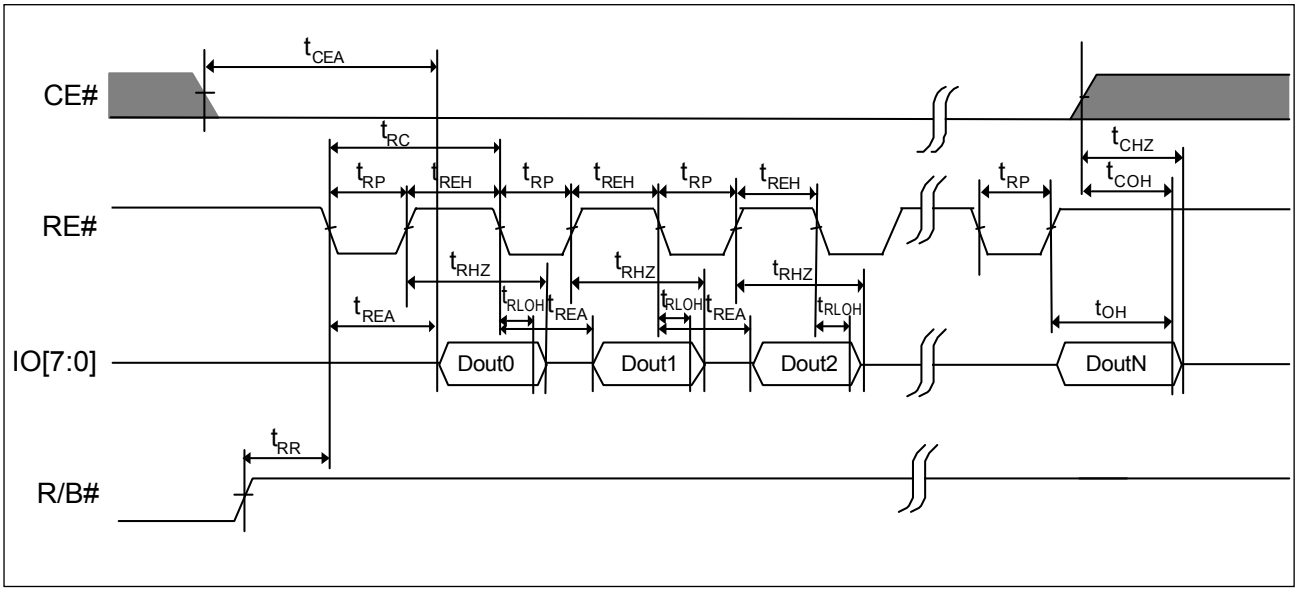

Figure 10. AC Waveforms for Random Data Output

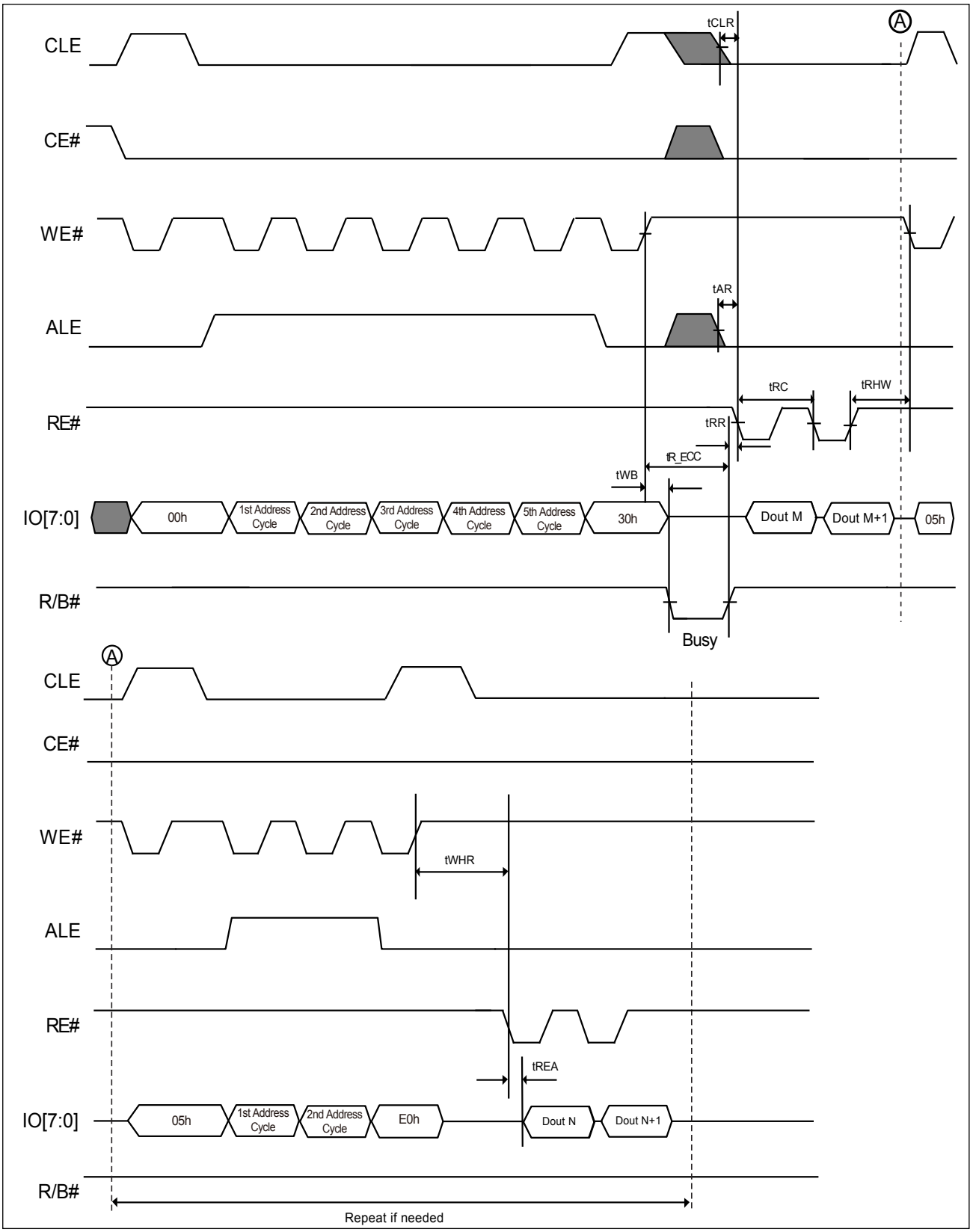

6-3. Page Program

The memory is programmed by page, which is 2,112 bytes. After Program load command (80h) is issued and the row and column address is given, the data will be loaded into the chip sequentially. Random Data Input command (85h) allows multi-data load in non-sequential address. After data load is complete, program confirm command (10h) is issued to start the page program operation. The page program operation in a block should start from the low address to high address (A[17:12]). Partial program in a page is allowed up to 4 times. However, the random data input mode for programming a page is allowed and number of times is not limited.

The status of the program completion can be detected by R/B# pin or Status register bit SR[6].

The program result is shown in the chip status bit (SR[0]). SR[0] = 1 indicates the Page Program is not successful and SR[0] = 0 means the program operation is successful.

During the Page Program progressing, only the read status register command and reset command are accepted, others are ignored.

Figure 11. AC Waveforms for Program Operation after Command 80H

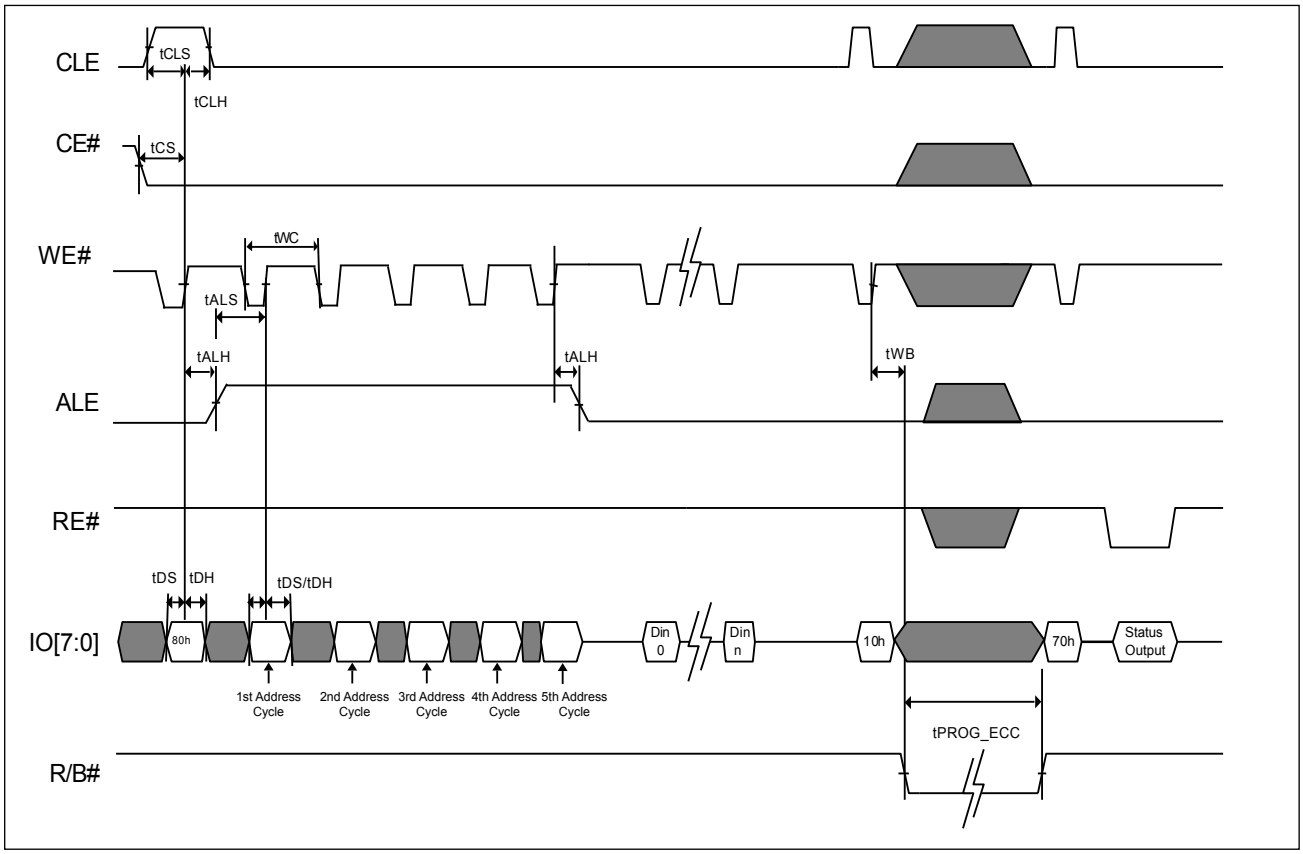

Figure 12. AC Waveforms for Random Data In (For Page Program)

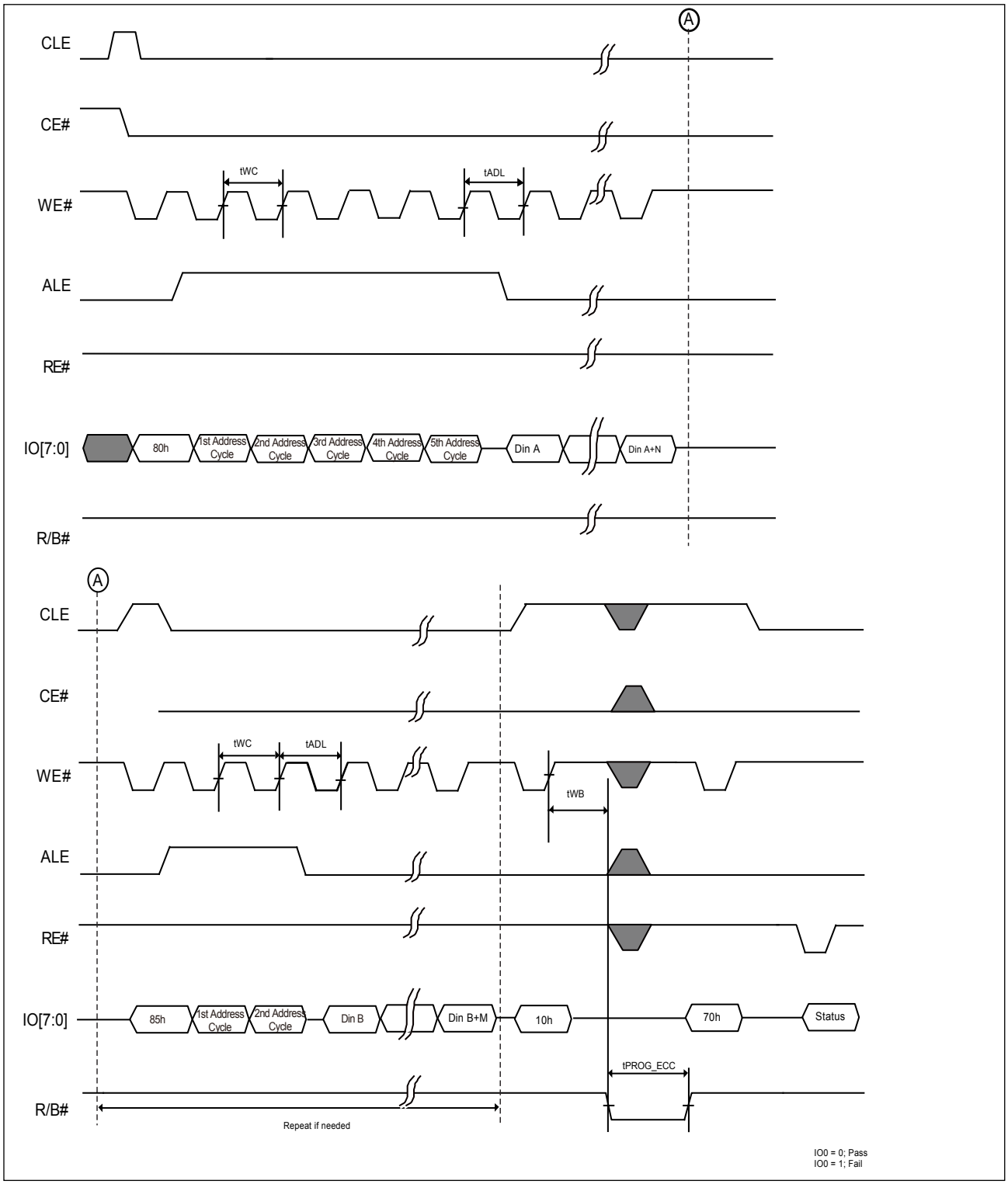

Note: *Random Data In is also supported in cache program.*

Figure 13. AC Waveforms for Program Operation with CE# Don't Care

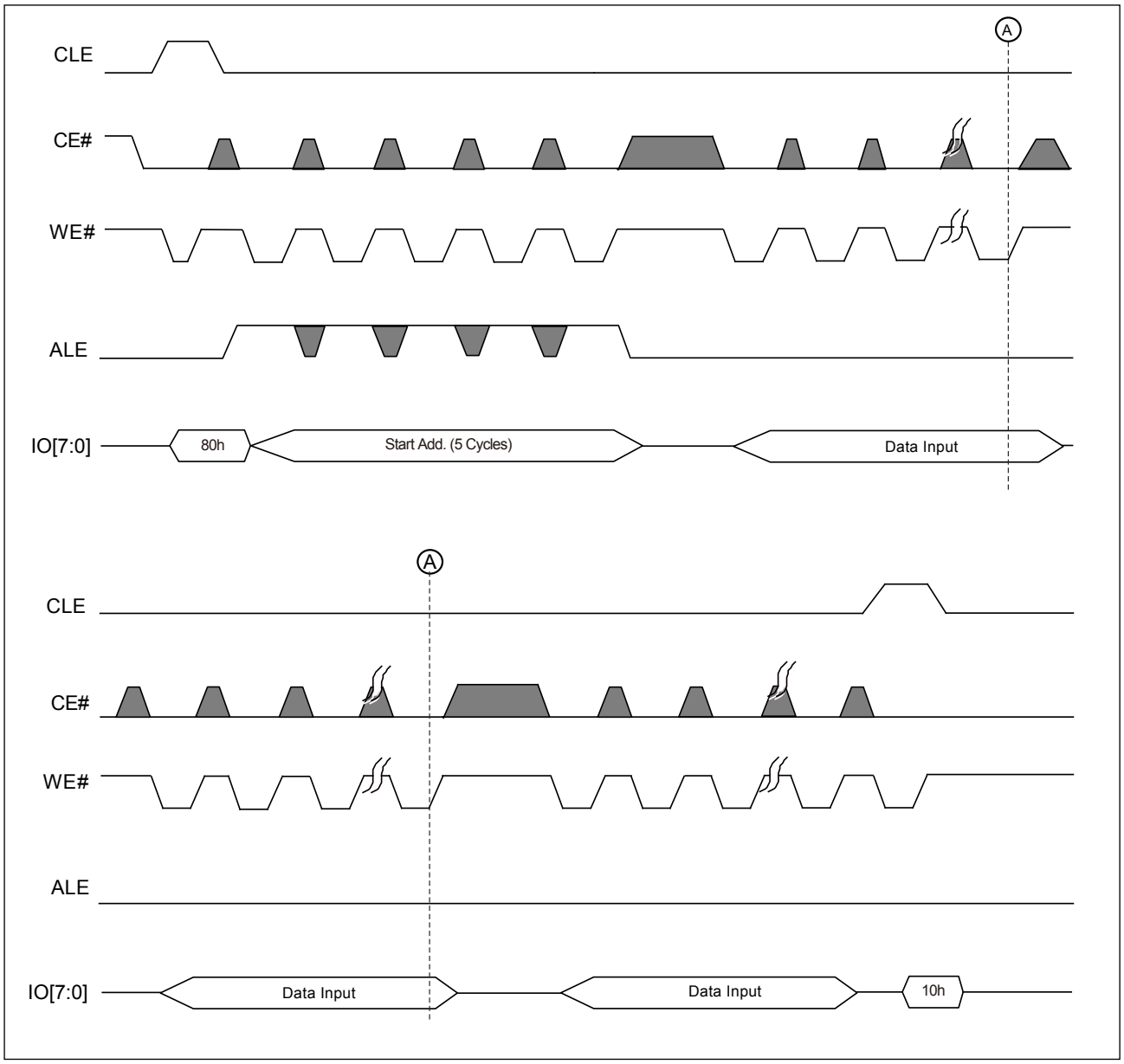

Note: *The CE# "Don't Care" feature may simplify the system interface, which allows the controller to directly write data into flash device, and the CE# transitions will not stop the program operation during the latency time.*

6-4. Cache Program

The cache program feature enhances the program performance by using the cache buffer of 2,112-byte. The serial data can be input to the cache buffer while the previous data stored in the buffer are programming into the memory cell. Cache Program command sequence is almost the same as page program command sequence. Only the Program Confirm command (10h) is replaced by cache Program command (15h).

After the Cache Program command (15h) is issued. The user can check the status by the following methods.

- R/B# pin

- Cache Status Bit (SR[6] = 0 indicates the cache is busy; SR[6] = 1 means the cache is ready).

The user can issue another Cache Program Command Sequence after the Cache is ready. The user can always monitor the chip state by Ready/Busy Status Bit (SR[5]). The user can issues either program confirm command (10h) or cache program command (15h) for the last page if the user monitor the chip status by issuing Read Status Command (70h).

However, if the user only monitors the R/B# pin, the user needs to issue the program confirm command (10h) for the last page.

The user can check the Pass/Fail Status through P/F Status Bit (SR[0]) and Cache P/F Status Bit (SR[1]). SR[1] represents Pass/Fail Status of the previous page. SR[1] is updated when SR[6] change from 0 to 1 or Chip is ready. SR[0] shows the Pass/Fail status of the current page. It is updated when SR[5] change from "0" to "1" or the end of the internal programming. For more details, please refer to the related waveforms.

Figure 14-1. AC Waveforms for Cache Program

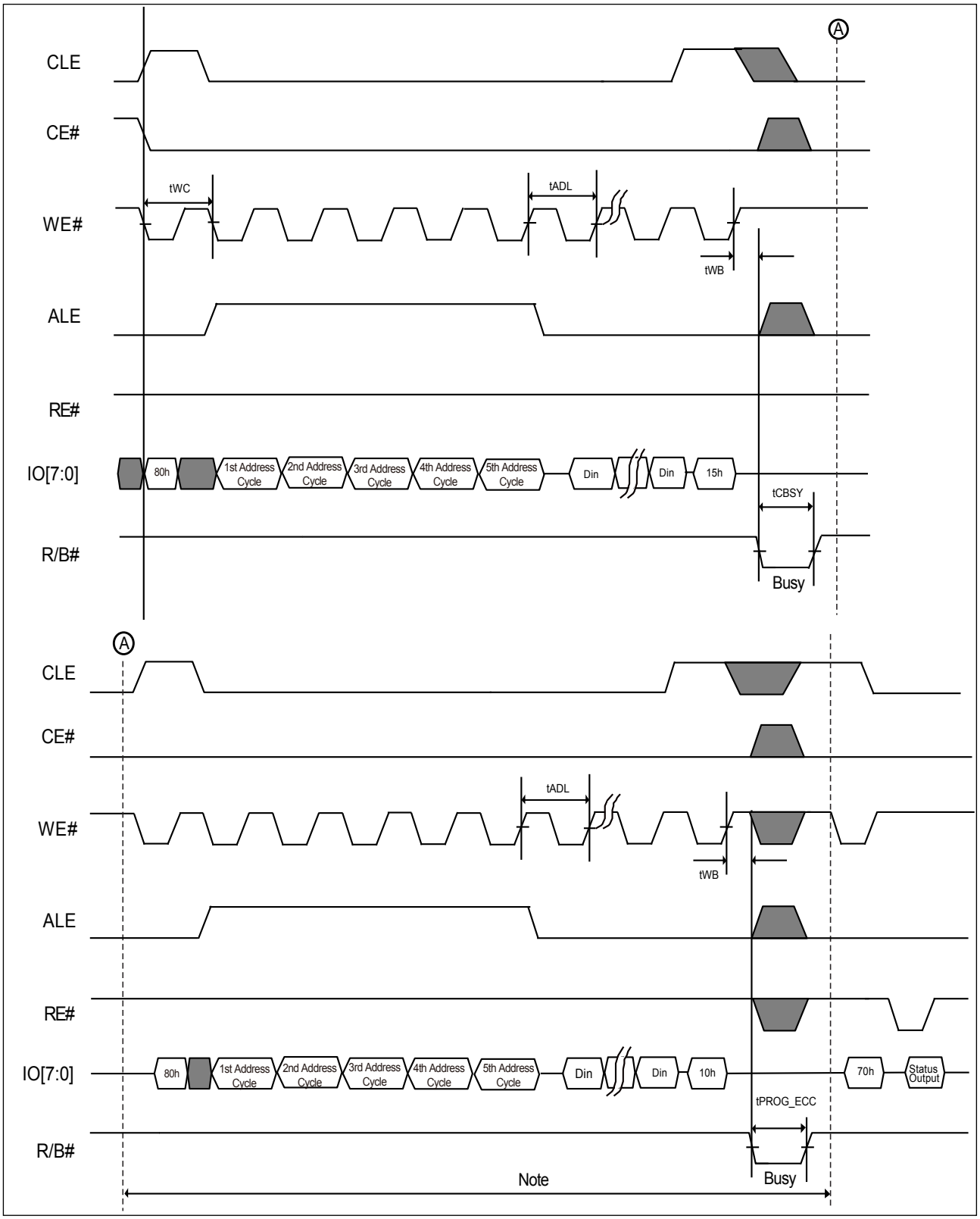

Note: *It indicates the last page Input & Program.*

Figure 14-2. AC Waveforms for Sequence of Cache Program

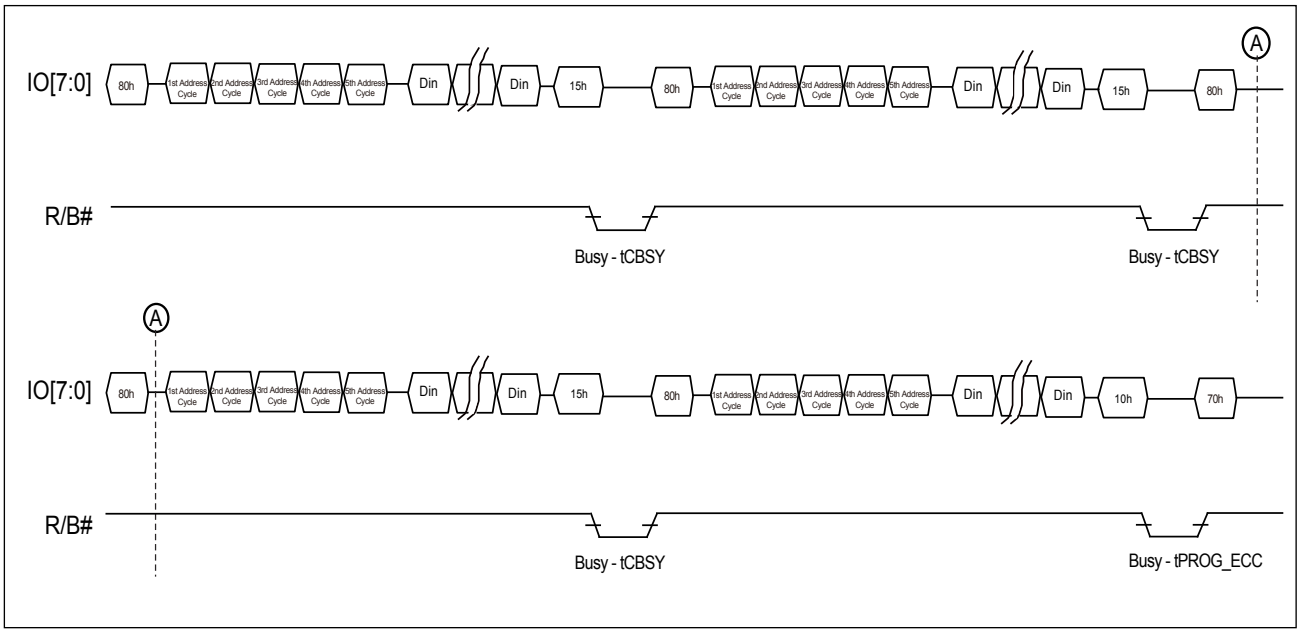

Note: *tPROG_ECC = Page (Last) programming + Page (Last-1) programming time - Input cycle time of command & address - Data loading time of Page (Last).*

6-5. Block Erase

The MX30LFxGE8AB supports a block erase command. This command will erase a block of 64 pages associated with the most significant address bits.

The completion of the erase operation can be detected by R/B# pin or Status register bit (IO6). Recommend to check the status register bit IO0 after the erase operation completes.

During the erasing process, only the read status register command and reset command can be accepted, others are ignored.

Figure 15. AC Waveforms for Erase Operation

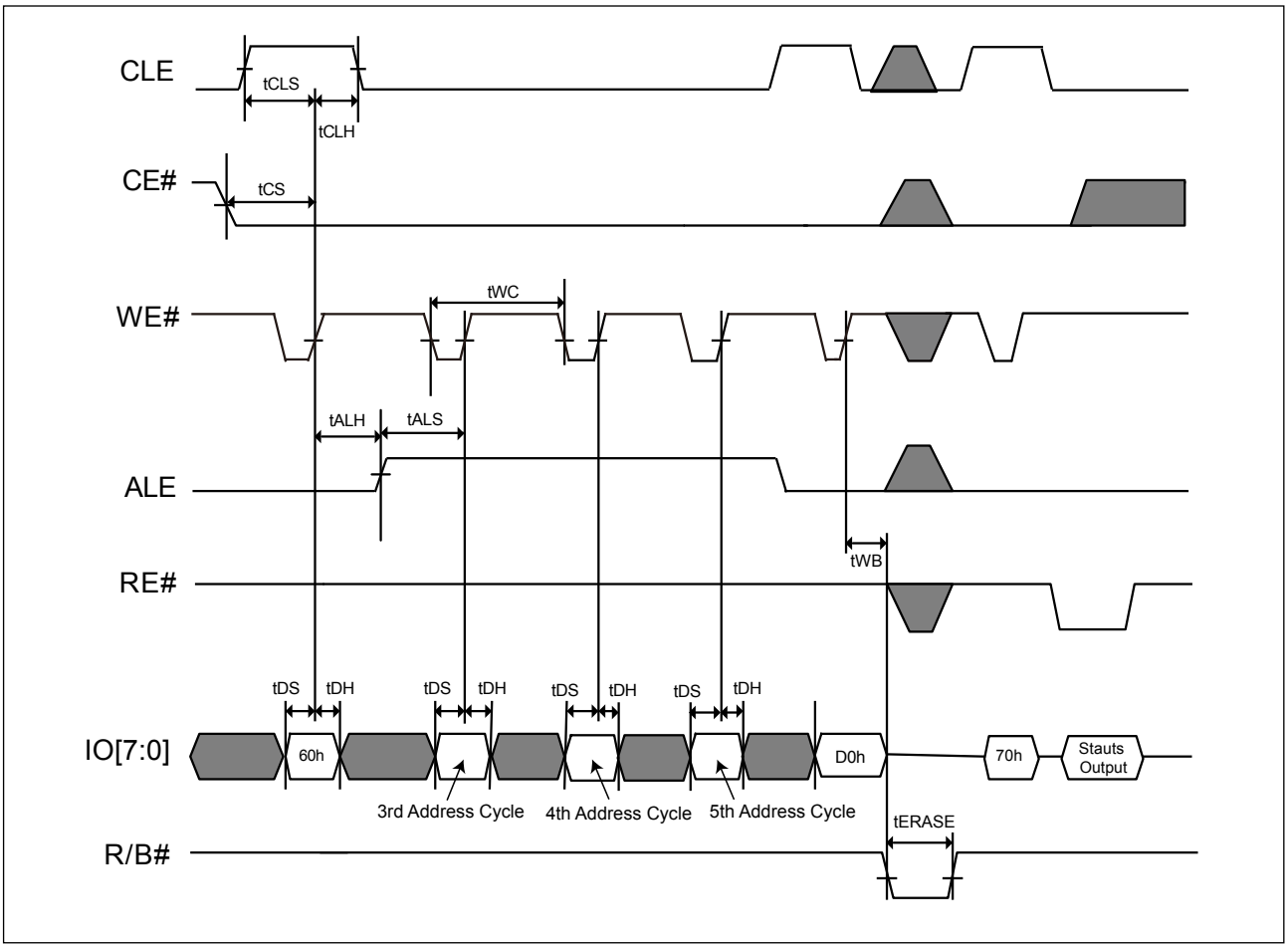

6-6. ID Read

The device contains ID codes that identify the device type and the manufacturer. The ID READ command sequence includes one command Byte (90h), one address byte (00h). The Read ID command 90h may provide the manufacturer ID (C2h) of one-byte and device ID of one-byte, also Byte2, Byte3, and Byte4 ID code are followed.

The device support ONFI Parameter Page Read, by sending the ID Read (90h) command and following one byte address (20h), the four-byte data returns the value of 4Fh-4Eh-46h-49h for the ASCII code of "O"-"N"-"F"-"I" to identify the ONFI parameter page.

Table 2. ID Codes Read Out by ID Read Command 90H

1Gb	**1Gb, x8, 3V**
Byte0-Manufacturer	C2h
Byte1: Device ID	F1h
Byte2	80h
Byte3	95h
Byte4	82h
2Gb	**2Gb, x8, 3V**
Byte0-Manufacturer	C2h
Byte1: Device ID	DAh
Byte2	90h
Byte3	95h
Byte4	86h
4Gb	**4Gb, x8, 3V**
Byte0-Manufacturer	C2h
Byte1: Device ID	DCh
Byte2	90h
Byte3	95h
Byte4	D6h

Table 3. The Definition of Byte2~Byte4 of ID Table

Terms	Description	IO7	IO6	IO5	IO4	IO3	IO2	IO1	IO0
Byte 2									
Die# per CE	1							0	0
	2							0	1
Cell type	SLC					0	0		
# of Simultaneously Programmed page	1			0	0				
	2			0	1				
Interleaved operations between Multiple die	Not supported		0						
Cache Program	Supported	1							
Byte 3									
Page size	2KB							0	1
Spare area size	64B						1		
Block size (without spare)	128KB			0	1				
Organization	x8		0						
Sequential access (min.)	20ns	1				0			
Byte 4									
Internal ECC level	4-bit ECC/524B							1	0
#Plane per CE	1					0	0		
	2					0	1		
	4					1	0		
Plane size	1Gb		0	0	0				
	2Gb		1	0	1				
Internal ECC state	ECC enabled	1							

Figure 16-1. AC Waveforms for ID Read Operation

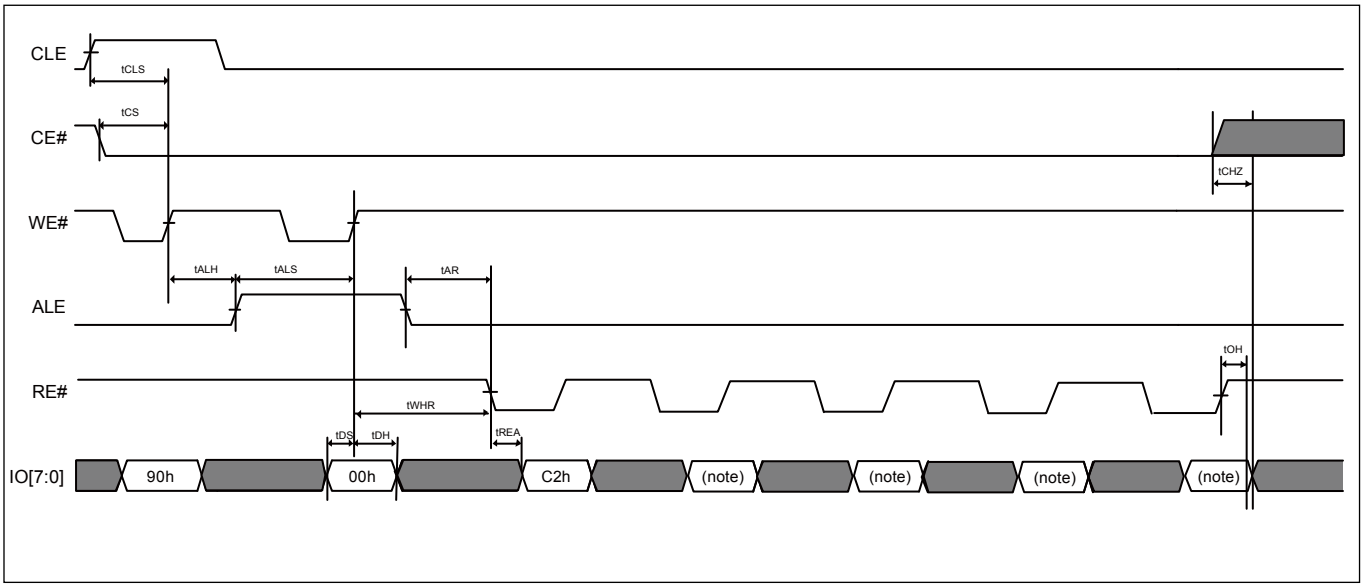

Note: *See also* ***Table 2. ID Codes Read Out by ID Read Command 90H***.

Figure 16-2. AC Waveforms for ID Read (ONFI Identifier) Operation

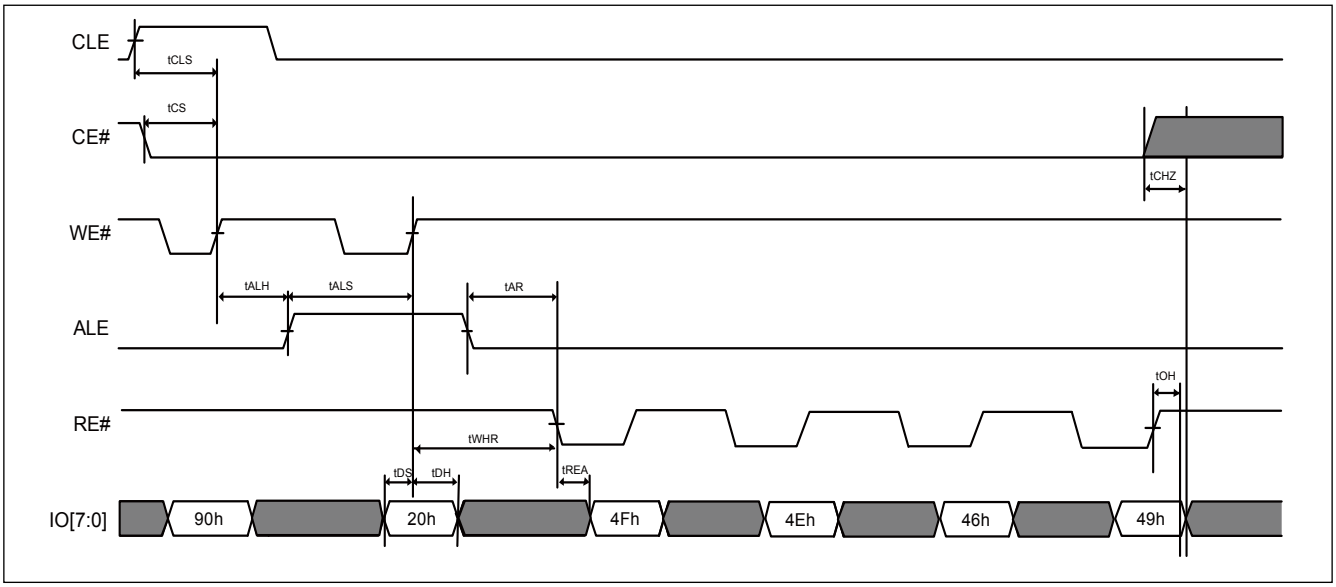

6-7. Status Read

The MX30LFxGE8AB provides a status register that outputs the device status by writing a command code 70h, and then the IO pins output the status at the falling edge of CE# or RE# which occurs last. Even though when multiple flash devices are connecting in system and the R/B#pins are common-wired, the two lines of CE# and RE# may be checked for individual devices status separately.

The status read command 70h will keep the device at the status read mode unless next valid command is issued. The resulting information is outlined in **Table 4-1** and **Table 4-2.**

Table 4-1. Status Output

Pin	Status	Related Mode	Value	
SR[0]	Chip Status	Page Read, Page Program, Cache Program (Page N), Block Erase (Note 1)	0: Passed	1: Failed
SR[1]	Cache Program Result	Cache Program (Page N-1)	0: Passed	1: Failed
SR[2]	Not Used			
SR[3]	Internal ECC Status	Page Read (Note 1)	See ECC bits Table below	
SR[4]	Internal ECC Status	Page Read (Note 1)	See ECC bits Table below	
SR[5]	Ready / Busy (For P/E/R Controller)	Cache Program, other Page Program/Block Erase/Read are same as IO6 (Note 2)	0: Busy	1: Ready
SR[6]	Ready / Busy	Page Program, Block Erase, Cache Program, Read (Note 3)	0: Busy	1: Ready
SR[7]	Write Protect	Page Program, Block Erase, Cache Program, Read	0: Protected	1: Unprotected

Notes:

1. *ECC status for current output page.*
2. *During the actual programming operation, the SR[5] is "0" value; however, when the internal operation is completed during the cache mode, the SR[5] returns to "1".*
3. *The SR[6] returns to "1" when the internal cache is available to receive new data. The SR[6] value is consistent with the R/B#.*

Table 4-2. ECC Bits Status

SR Bits and Value			Status of Error Bits Correction
SR[4]	**SR[3]**	**SR[0]**	
0	0	1	Uncorrectable
0	0	0	0-1 bits error and been corrected
1	0	0	2 bits error and been corrected
0	1	0	3 bits error and been corrected
1	1	0	4 bits error and been corrected

The following is an example of a HEX data bit assignment:

Figure 17. Bit Assignment (HEX Data)

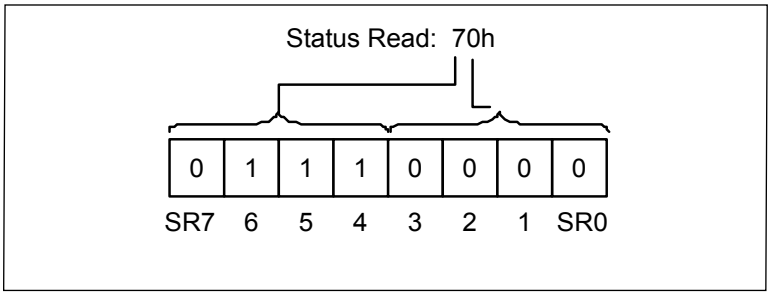

Figure 18. AC Waveforms for Status Read Operation

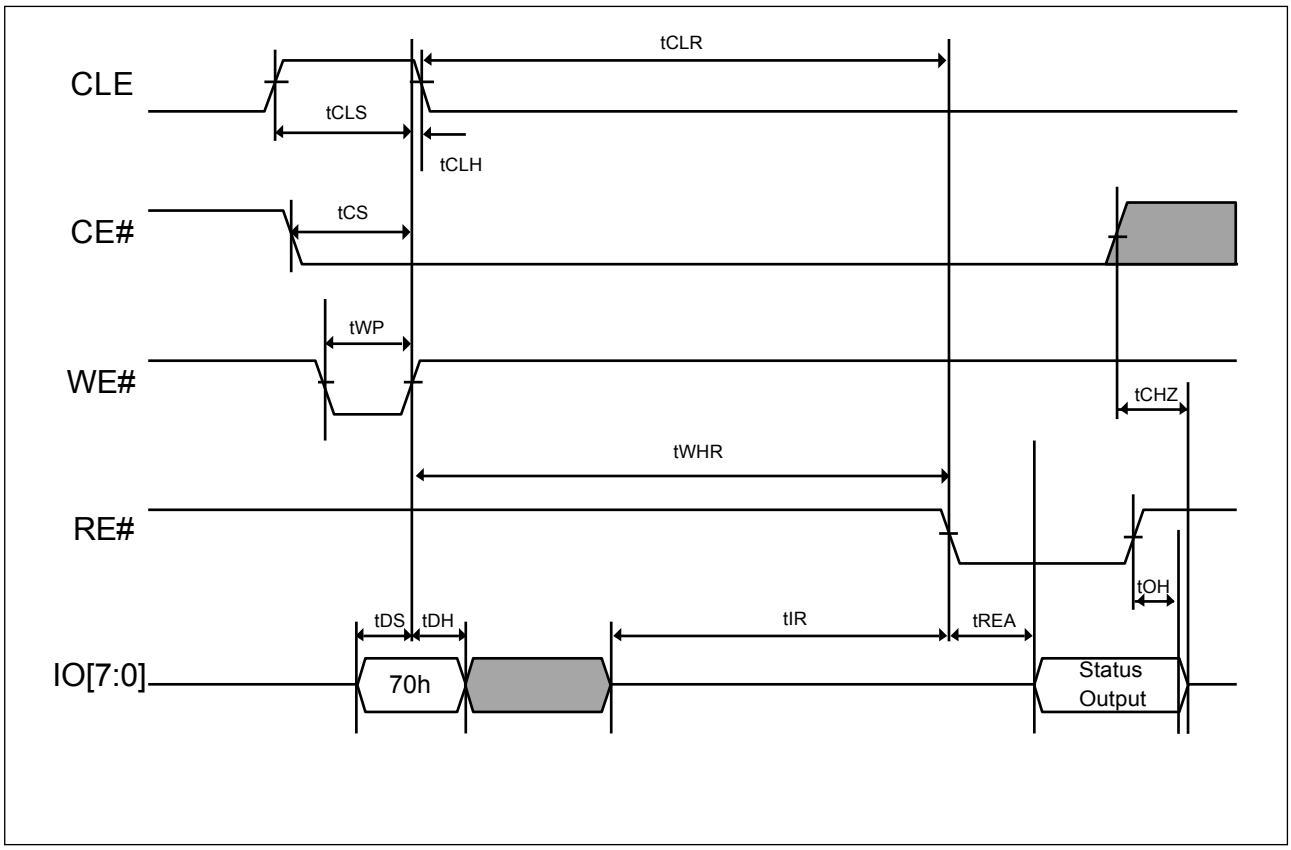

6-8. Status Enhance Read

The 2Gb and 4Gb support the two-plane operation, the Status Enhanced Read command (78h) offers the alternative method besides the Status Read command to get the status of specific plane in the same NAND Flash device. The result information is outlined in **Table 4-1** and **Table 4-2.**

The [SR]6 and SR[5] bits are shared with all planes. However, the SR[0], SR[1], SR[3], SR[4] are for the status of specific plane in the row address. The Status Enhanced Read command is not allowed at power-on Reset (FFh) command and OTP enabled.

Figure 19. AC Waveforms for Status Enhance Operation

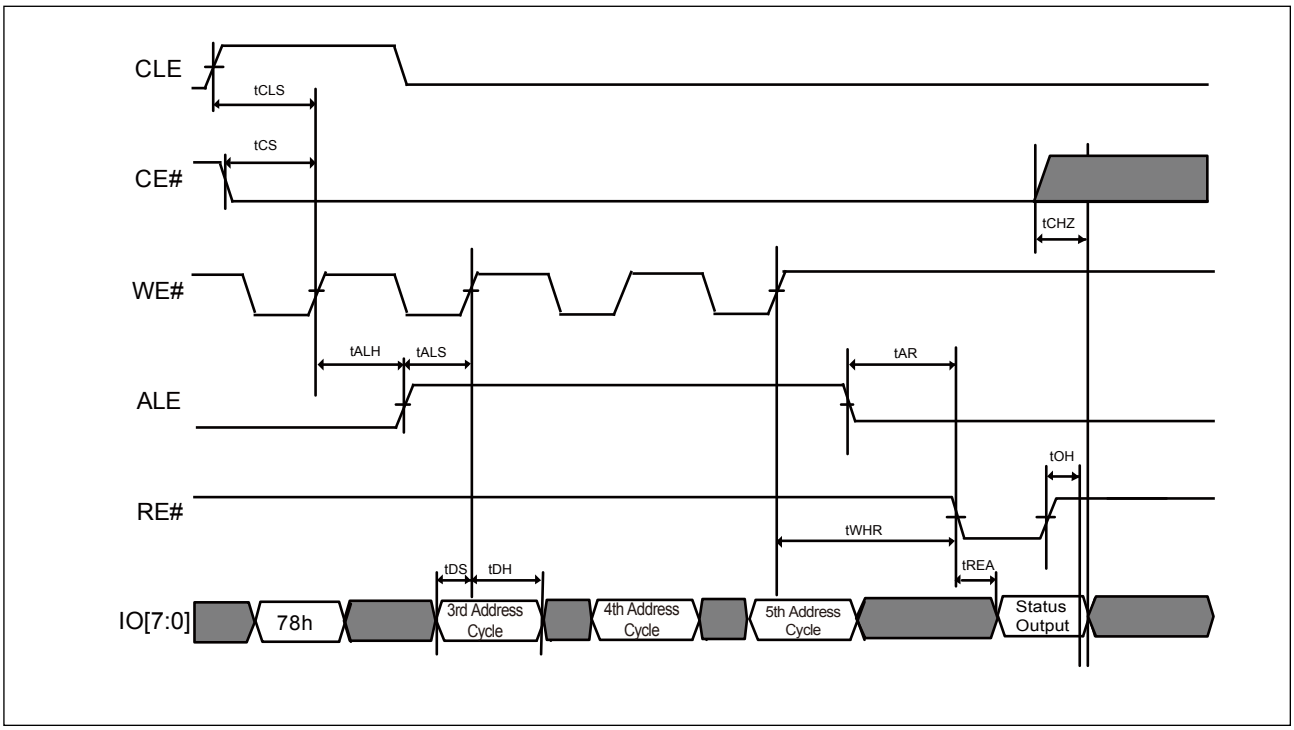

6-9. Reset

The reset command FFh resets the read/program/erase operation and clear the status register to be E0h (when WP# is high). The reset command during the program/erase operation will result in the content of the selected locations(perform programming/erasing) might be partially programmed/erased.

If the Flash memory has already been set to reset stage with reset command, the additional new reset command is invalid.

Figure 20. AC waveforms for Reset Operation

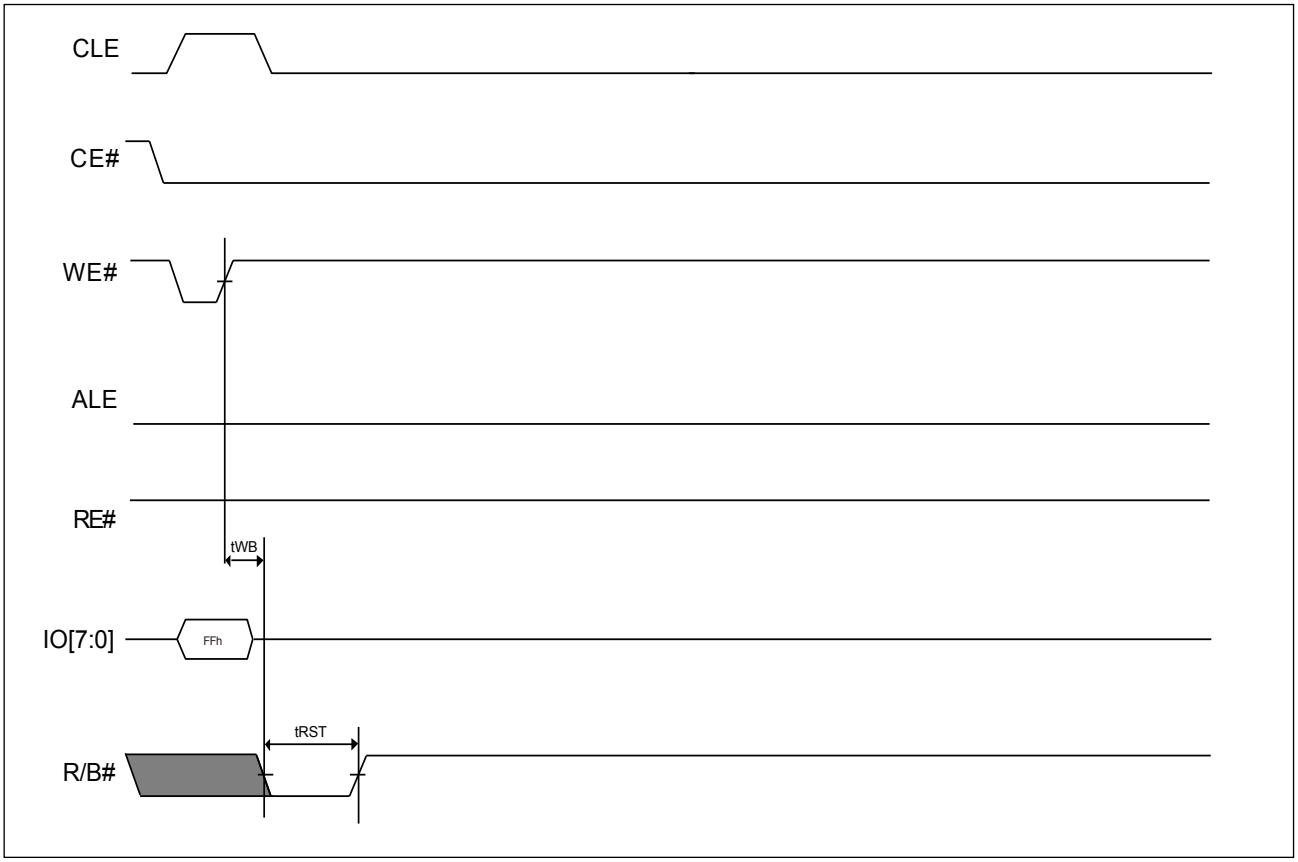

6-10. Parameter Page Read (ONFI)

The NAND Flash device support ONFI Parameter Page Read and the parameter can be read out by sending the command of ECh and giving the address 00h. The NAND device information may refer to the table of parameter page(ONFI), there are three copies of 256-byte data and additional redundant parameter pages.

Once sending the ECh command, the NAND device will remain in the Parameter Page Read mode until next valid command is sent.

The Random Data Out command set (05h-E0h) can be used to change the parameter location for the specific parameter data random read out.

The Status Read command (70h) can be used to check the completion with a following read command (00h) to enable the data out.

The internal ECC is disabled on the parameter page.

Figure 21. AC waveforms for Parameter Page Read (ONFI) Operation

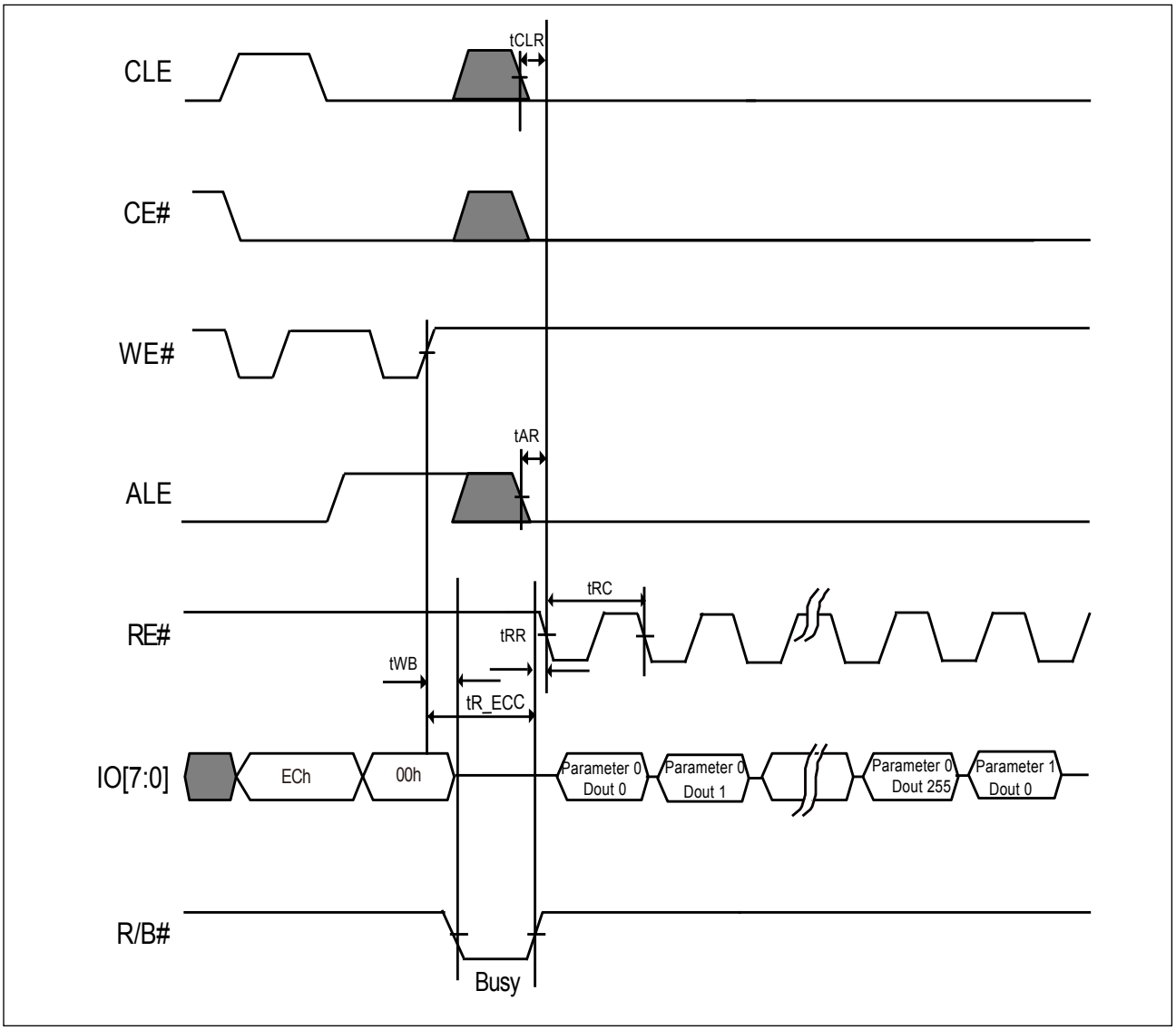

Figure 22. AC Waveforms for Parameter Page Read (ONFI) Random Operation (For 05h-E0h)

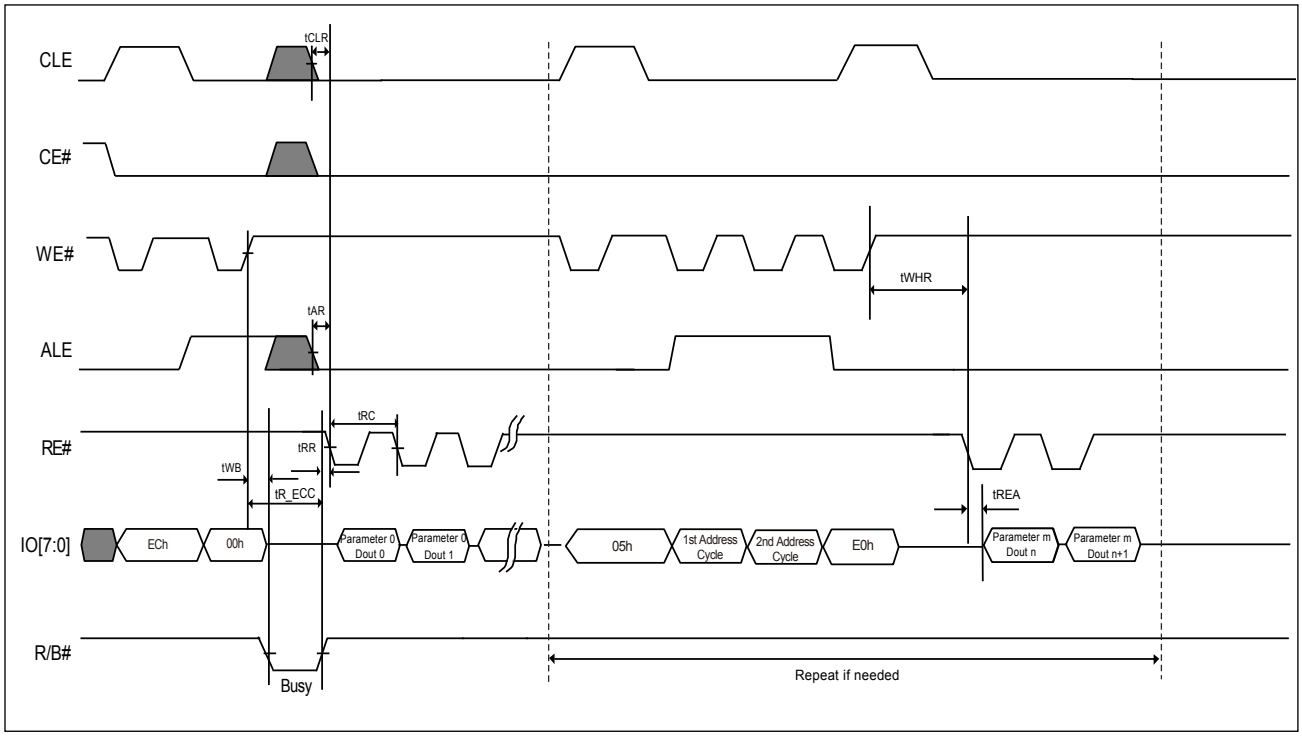

Table 5. Parameter Page (ONFI)

	Revision Information and Features Block		
Byte#	**Description**		**Data**
0-3	**Parameter Page Signature**		4Fh, 4Eh, 46h, 49h
4-5	**Revision Number**		02h, 00h
6-7	**Features Supported**	1Gb, x8	10h, 00h
		2Gb, x8	18h, 00h
		4Gb, x8	18h, 00h
8-9	**Optional Commands Supported**	1Gb	35h, 00h
		2Gb	3Dh, 00h
		4Gb	3Dh, 00h
10-31	**Reserved**		00h
	Manufacturer Information Block		
Byte#	**Description**		**Data**
32-43	**Device Manufacturer (12 ASCII characters)**		4Dh,41h,43h,52h,4Fh,4Eh,49h,58h, 20h,20h,20h,20h
44-63	**Device Model (20 ASCII Characters)**	MX30LF1GE8AB	4Dh,58h,33h,30h,4Ch,46h,31h,47h, 45h,38h,41h,42h,20h,20h,20h,20h, 20h,20h,20h,20h
		MX30LF2GE8AB	4Dh,58h,33h,30h,4Ch,46h,32h,47h ,45h,38h,41h,42h,20h,20h,20h,20h, 20h,20h,20h,20h
		MX30LF4GE8AB	4Dh,58h,33h,30h,4Ch,46h,34h,47h, 45h,38h,41h,42h,20h,20h,20h,20h, 20h,20h,20h,20h
64	**JEDEC Manufacturer ID**		C2h
65-66	**Date Code**		00h, 00h
67-79	**Reserved**		00h

Memory Organization Block			
Byte#	**Description**		**Data**
80-83	Number of Data Bytes per Page		00h,08h,00h,00h
84-85	Number of Spare Bytes per Page		40h,00h
86-89	Number of Data Bytes per Partial Page		00h,02h,00h,00h
90-91	Number of Spare Bytes per Partial Page		10h,00h
92-95	Number of Pages per Block		40h,00h,00h,00h
96-99	Number of Blocks per Logical Unit	1Gb	00h,04h,00h,00h
		2Gb	00h,08h,00h,00h
		4Gb	00h,10h,00h,00h
100	Number of Logical Units (LUNs)		01h
101	Number of Address Cycles	1Gb	22h
		2Gb	23h
		4Gb	23h
102	Number of Bits per Cell		01h
103-104	Bad Blocks Maximum per LUN	1Gb	14h,00h
		2Gb	28h,00h
		4Gb	50h,00h
105-106	Block endurance		01h,05h
107	Guarantee Valid Blocks at Beginning of Target		01h
108-109	Block endurance for guaranteed valid blocks		01h,03h
110	Number of Programs per Page		04h
111	Partial Programming Attributes		00h
112	Number of Bits ECC Correctability		00h
113	Number of Interleaved Address Bits	1Gb	00h
		2Gb	01h
		4Gb	01h
114	Interleaved Operation Attributes	1Gb	00h
		2Gb	0Eh
		4Gb	0Eh
115-127	Reserved		00h

Electrical Parameters Block			
Byte#	**Description**		**Data**
128	I/O Pin Capacitance		0Ah
129-130	Timing Mode Support		3Fh,00h
131-132	Program Cache Timing Mode Support		3Fh,00h
133-134	tPROG Maximum Page Program Time (uS)	600us	58h,02h
135-136	tBERS (tERASE) Maximum Block Erase Time (uS)	3500us	ACh,0Dh
137-138	tR Maximum Page Read Time (uS)	70us	46h,00h
139-140	tCCS Minimum Change Column Setup Time (ns)	60ns	3Ch,00h
141-163	Reserved		00h

Vendor Blocks		
Byte#	**Description**	**Data**
164-165	Vendor Specific Revision Number	00h
166-253	Vendor Specific	00h
254-255	Integrity CRC	Set at Test ***(Note)***
Redundant Parameter Pages		
Byte#	**Description**	**Data**
256-511	Value of Bytes 0-255	
512-767	Value of Bytes 0-255	
768+	Additional Redundant Parameter Pages	

Note:
The Integrity CRC (Cycling Redundancy Check) field is used to verify that the contents of the parameters page were transferred correctly to the host. Please refer to ONFI 1.0 specifications for details.

The CRC shall be calculated using the following 16-bit generator polynomial:
$G(X) = X^{16} + X^{15} + X^2 + 1$

6-11. Unique ID Read (ONFI)

The unique ID is 32-byte and with 16 copies for back-up purpose. After writing the Unique ID read command (EDh) and following the one address byte (00h), the host may read out the unique ID data. The host need to XOR the 1st 16-byte unique data and the 2nd 16-byte complement data to get the result, if the result is FFh, the unique ID data is correct; otherwise, host need to repeat the XOR with the next copy of Unique ID data. The internal ECC is disabled on the unique ID.

Once sending the EDh command, the NAND device will remain in the Unique ID read mode until next valid command is sent.

To change the data output location, it is recommended to use the Random Data Out command set (05h-E0h).

The Status Read command (70h) can be used to check the completion. To continue the read operation, a following read command (00h) to re-enable the data out is necessary.

Figure 23. AC waveforms for Unique ID Read Operation

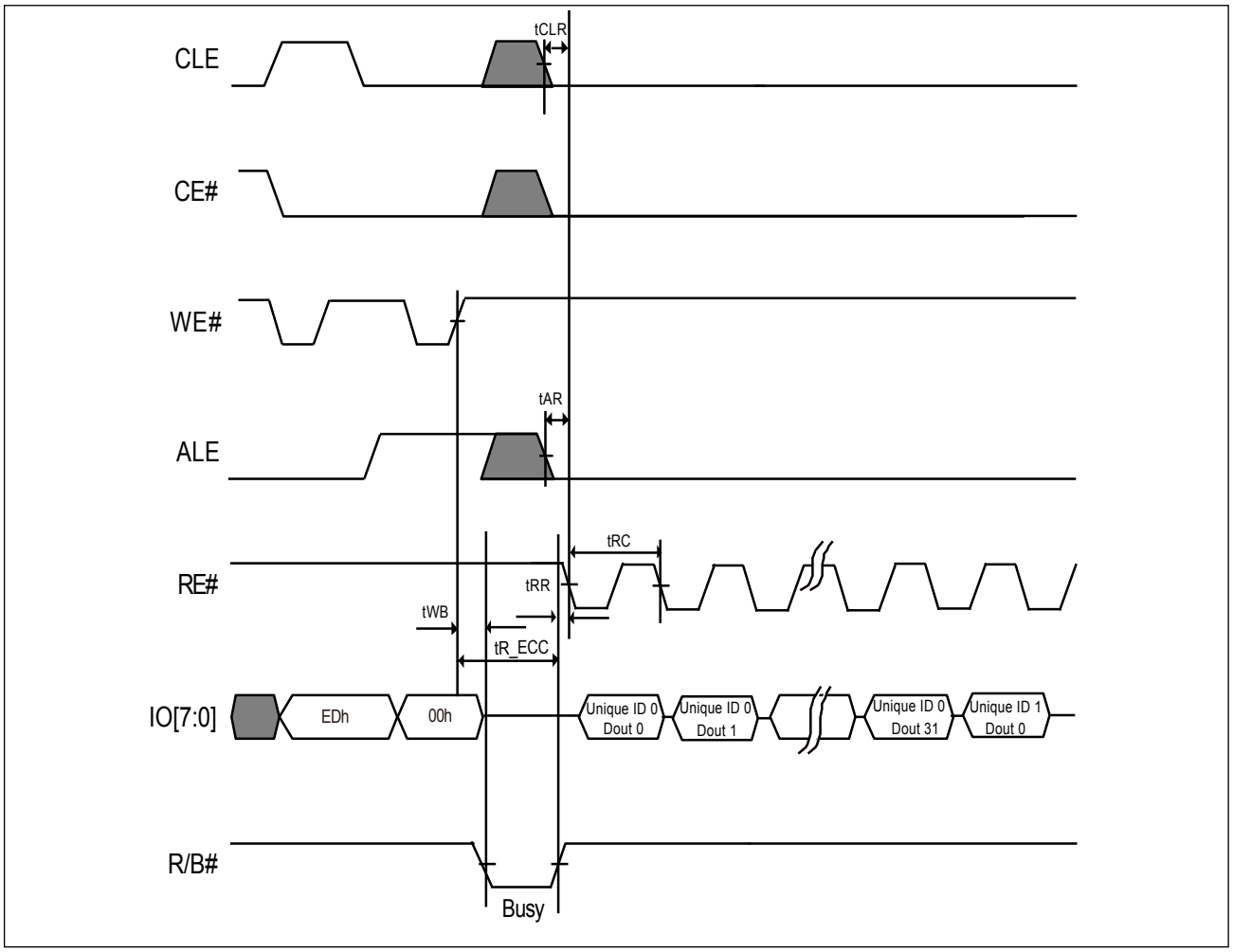

Figure 24. AC waveforms for Unique ID Read Operation (For 05h-E0h)

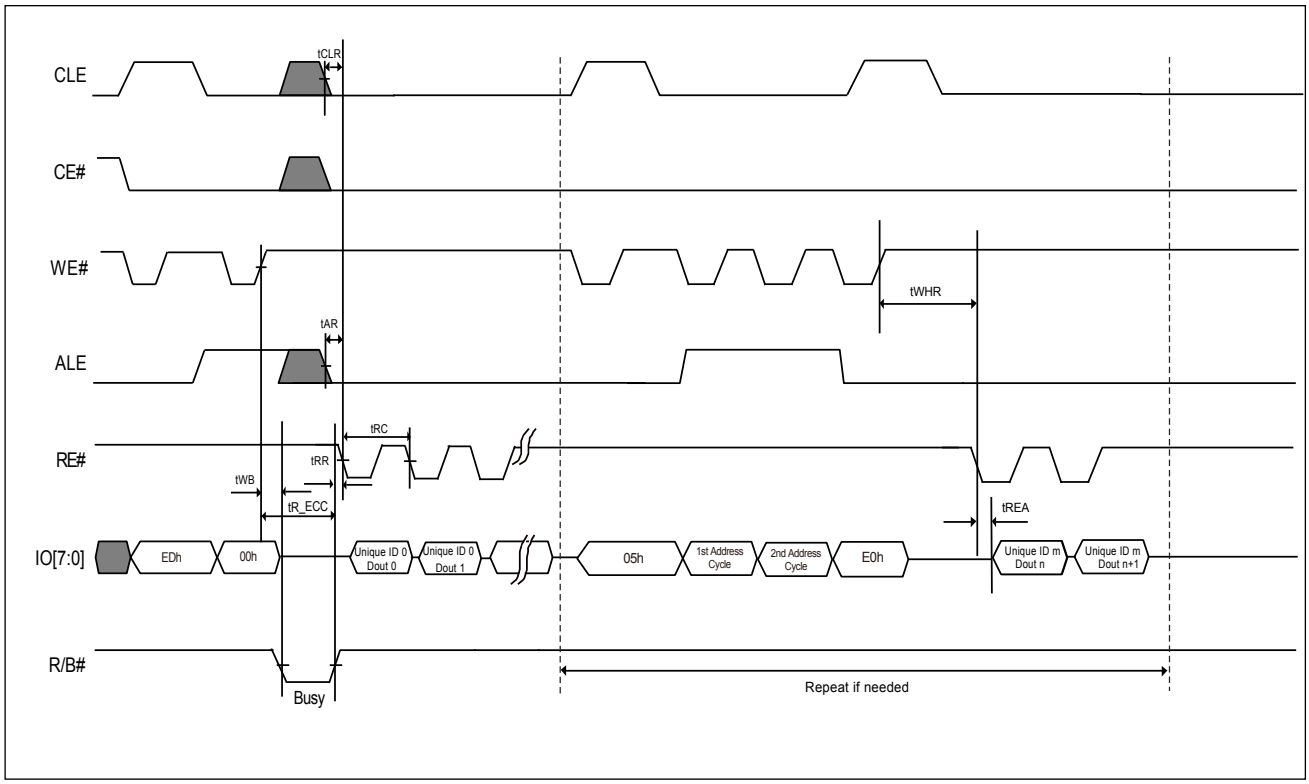

6-12. Feature Set Operation (ONFI)

The Feature Set operation is to change the default power-on feature sets by using the Set Feature and Get Feature command and writing the specific parameter data (P1-P4) on the specific feature addresses. The NAND device may remain the current feature set until next power cycle since the feature set data is volatile. However, the reset command (FFh) can not reset the current feature set.

Table 6-1. Definition of Feature Address

Feature Address	Description
00h-8Fh, 91h-FFh	Reserved
90h	Array Operation Mode

Table 6-2. Sub-Feature Parameter Table of Feature Address - 90h (Array Operation Mode)

Sub Feature Parameter	Definition		IO7	IO6	IO5	IO4	IO3	IO2	IO1	IO0	Values	Notes
P1	Array Operation Mode	Normal	Reserved (0)				1	0	0	0	0000 1000b	1
		OTP Operation	Reserved (0)				1	0	0	1	0000 1001b	
		OTP Protection	Reserved (0)				1	0	1	1	0000 1011b	
P2			Reserved (0)								0000 0000b	
P3			Reserved (0)								0000 0000b	
P4			Reserved (0)								0000 0000b	

Note 1: *The value is clear to 08h at power cycle.*

6-12-1. Set Feature (ONFI)

The Set Feature command is to change the power-on default feature set. After sending the Set Feature command (EFh) and following specific feature and then input the P1-P4 parameter data to change the default power-on feature set. Once sending the EFh command, the NAND device will remain in the Set Feature mode until next valid command is sent.

The Status Read command (70h) may check the completion of the Set Feature.

Figure 25. AC Waveforms for Set Feature (ONFI) Operation

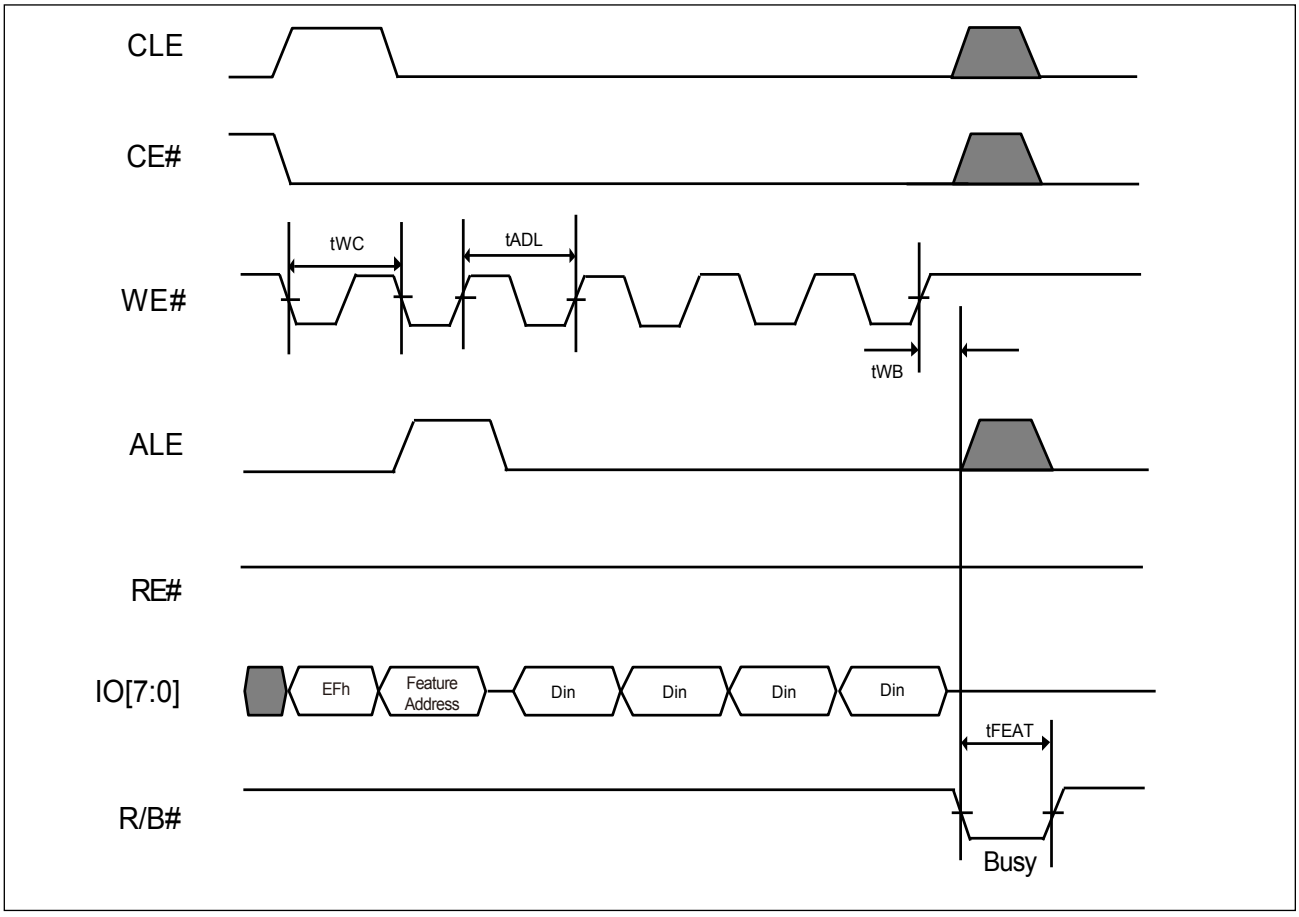

6-12-2. Get Feature (ONFI)

The Get Feature command is to read sub-feature parameter. After sending the Get Feature command (EEh) and following specific feature, the host may read out the P1-P4 sub- feature parameter data. Once sending the EEh command, the NAND device will remain in the Get Feature mode until next valid command is sent.

The Status Read command (70h) can be used to check the completion. To continue the read operation, a following read command (00h) to re-enable the data out is necessary.

Please refer to the following waveform of **Get Feature Operation** for details.

Figure 26. AC Waveforms for Get Feature (ONFI) Operation

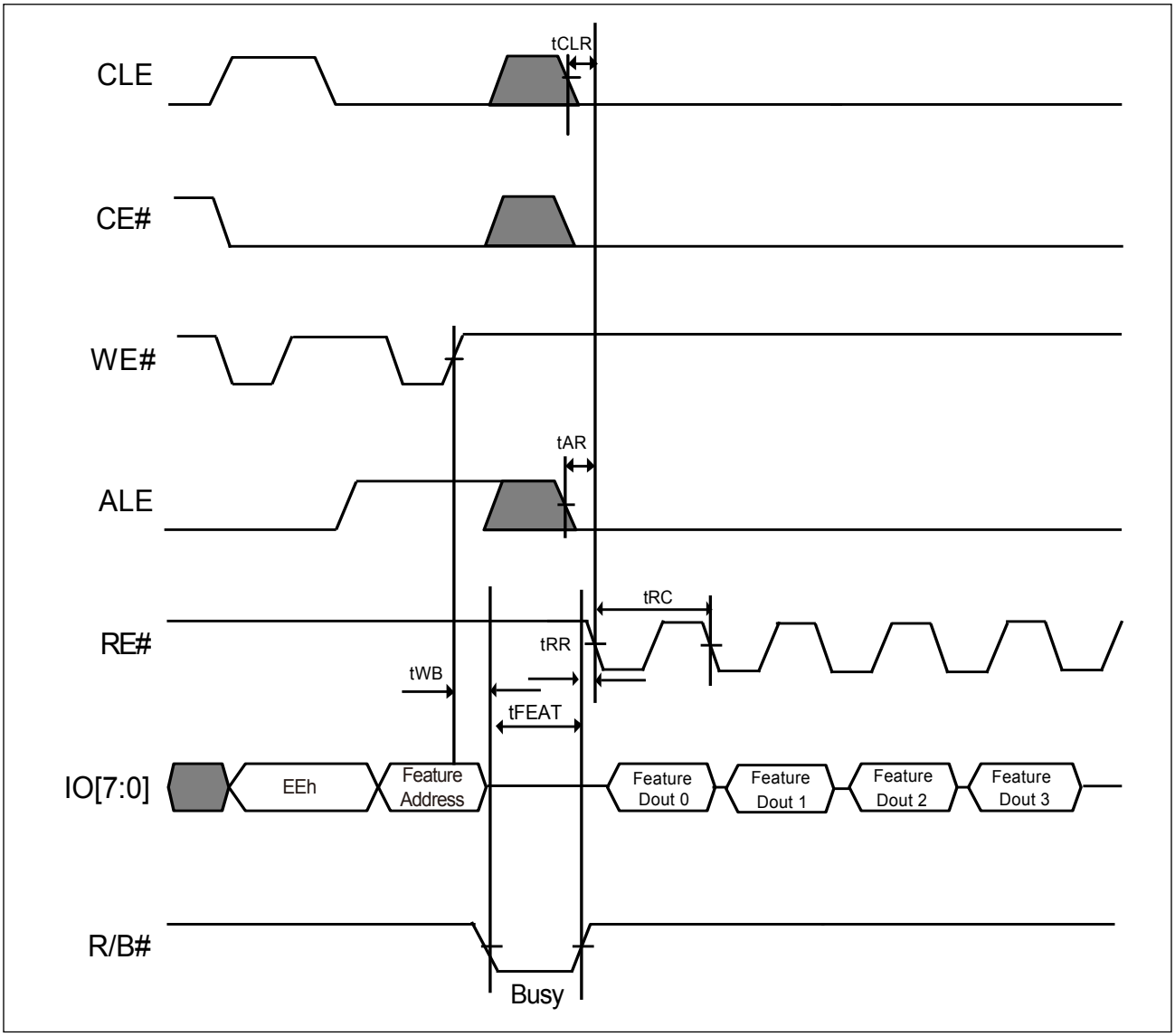

6-12-3. Secure OTP (One-Time-Programmable) Feature

There is an OTP area which has thirty full pages (30 x 2112-byte) guarantee to be good for system device serial number storage or other fixed code storage. The OTP area is a non-erasable and one-time-programmable area, which is default to “1” and allows whole page or partial page program to be “0”, once the OTP protection mode is set, the OTP area becomes read-only and cannot be programmed again.

The OTP operation is operated by the Set Feature/ Get Feature operation to access the OTP operation mode and OTP protection mode.

To check the NAND device is ready or busy in the OTP operation mode, either checking the R/B# or writing the Status Read command (70h) may collect the status.

To exit the OTP operation or protect mode, it can be done by writing 08h to P1 at feature address 90h.

OTP Read/Program Operation

To enter the OTP operation mode, it is by using the Set Feature command (EFh) and followed by the feature address (90h) and then input the 01h to P1 and 00h to P2-P4 of sub-Feature Parameter data(please refer to the sub-Feature Parameter table). After enter the OTP operation mode, the normal Read command (00h-30h) or Page program(80h-10h) command can be used to read the OTP area or program it. The address of OTP is located on the 02h-1Fh of page address.

Besides the normal Read command, the Random Data Output command (05h-E0h) can be used for read OTP data.

Besides the normal page program command, the Random Data Input command (85h) allows multi-data load in non-sequential address. After data load is completed, a program confirm command (10h) is issued to start the page program operation. The number of partial-page OTP program is 4 per each OTP page.

Figure 27. AC Waveforms for OTP Data Read

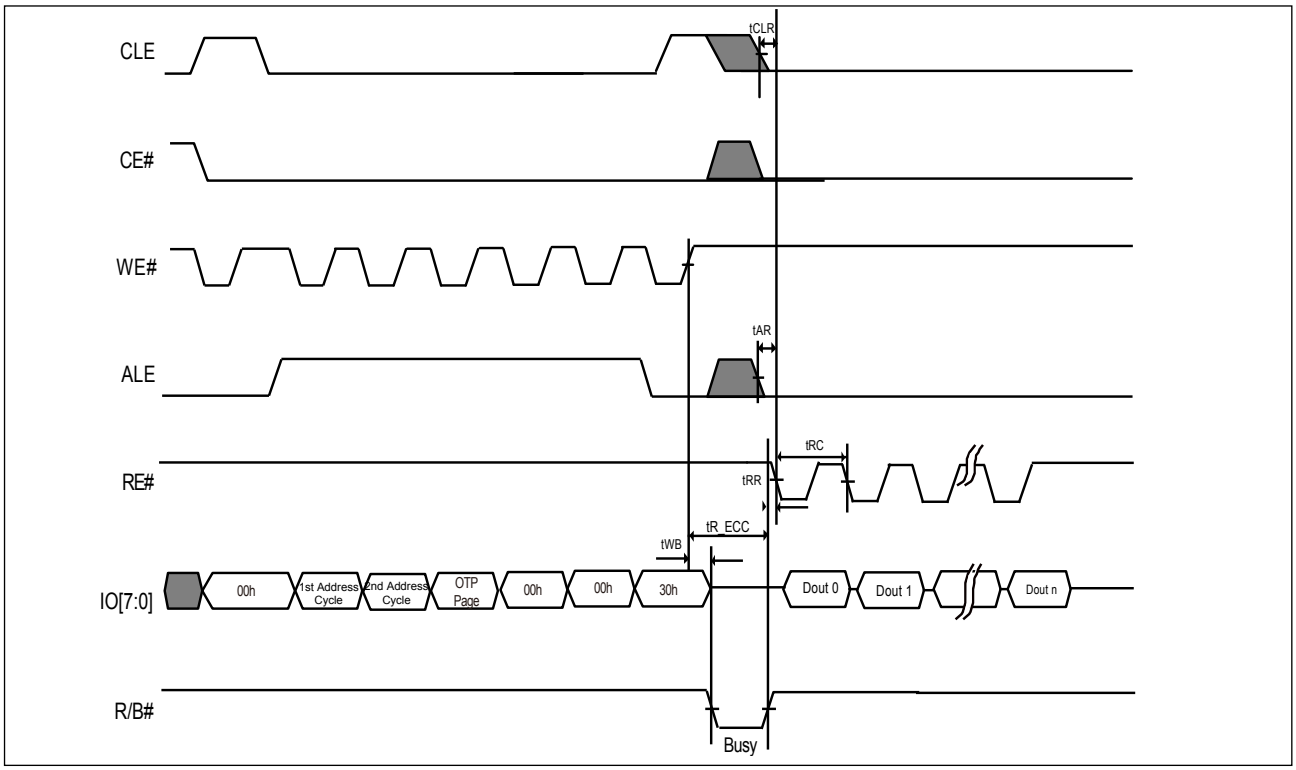

Figure 28. AC Waveforms for OTP Data Read with Random Data Output

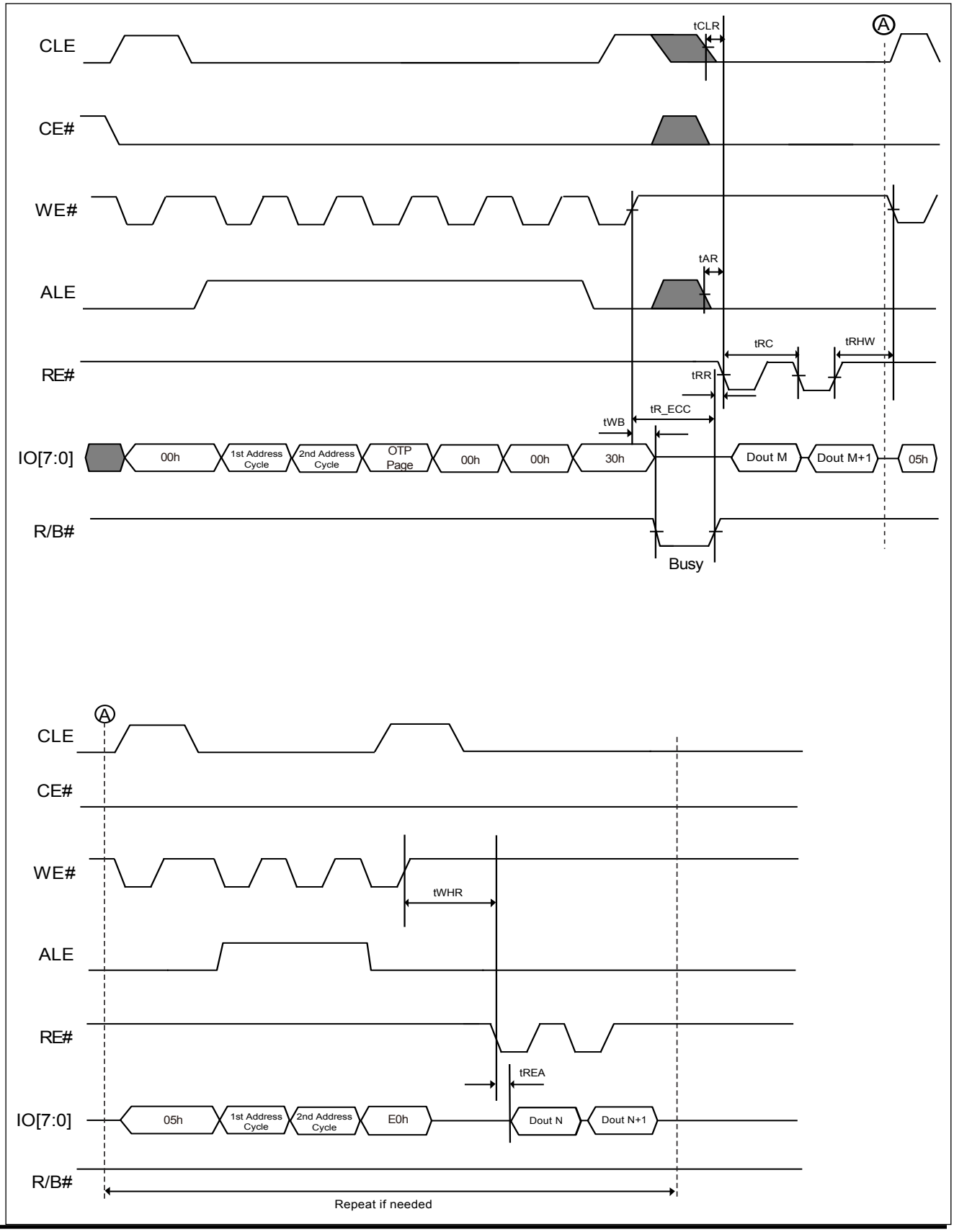

Figure 29. AC Waveforms for OTP Data Program

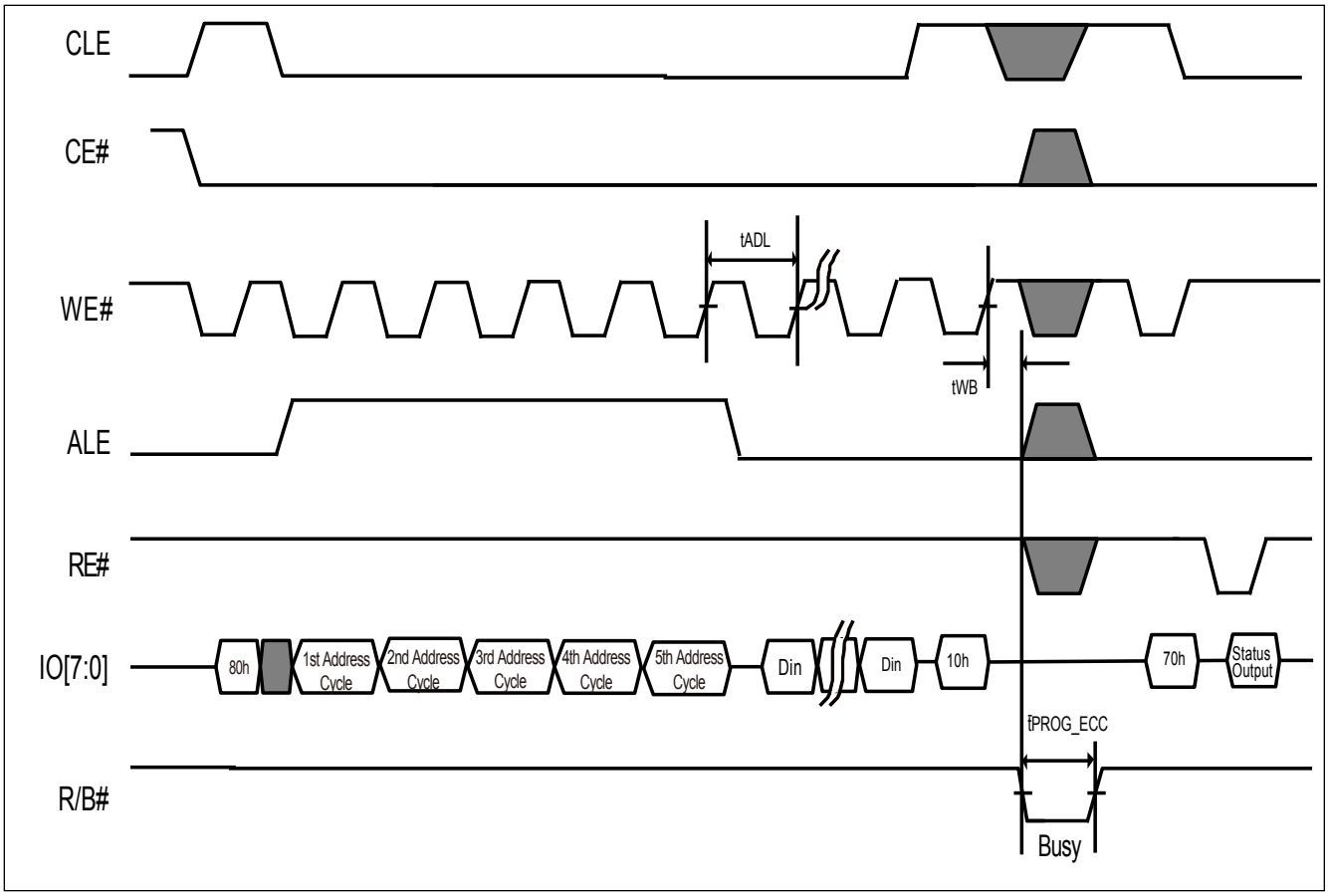

Figure 30. AC Waveforms for OTP Data Program with Random Data Input

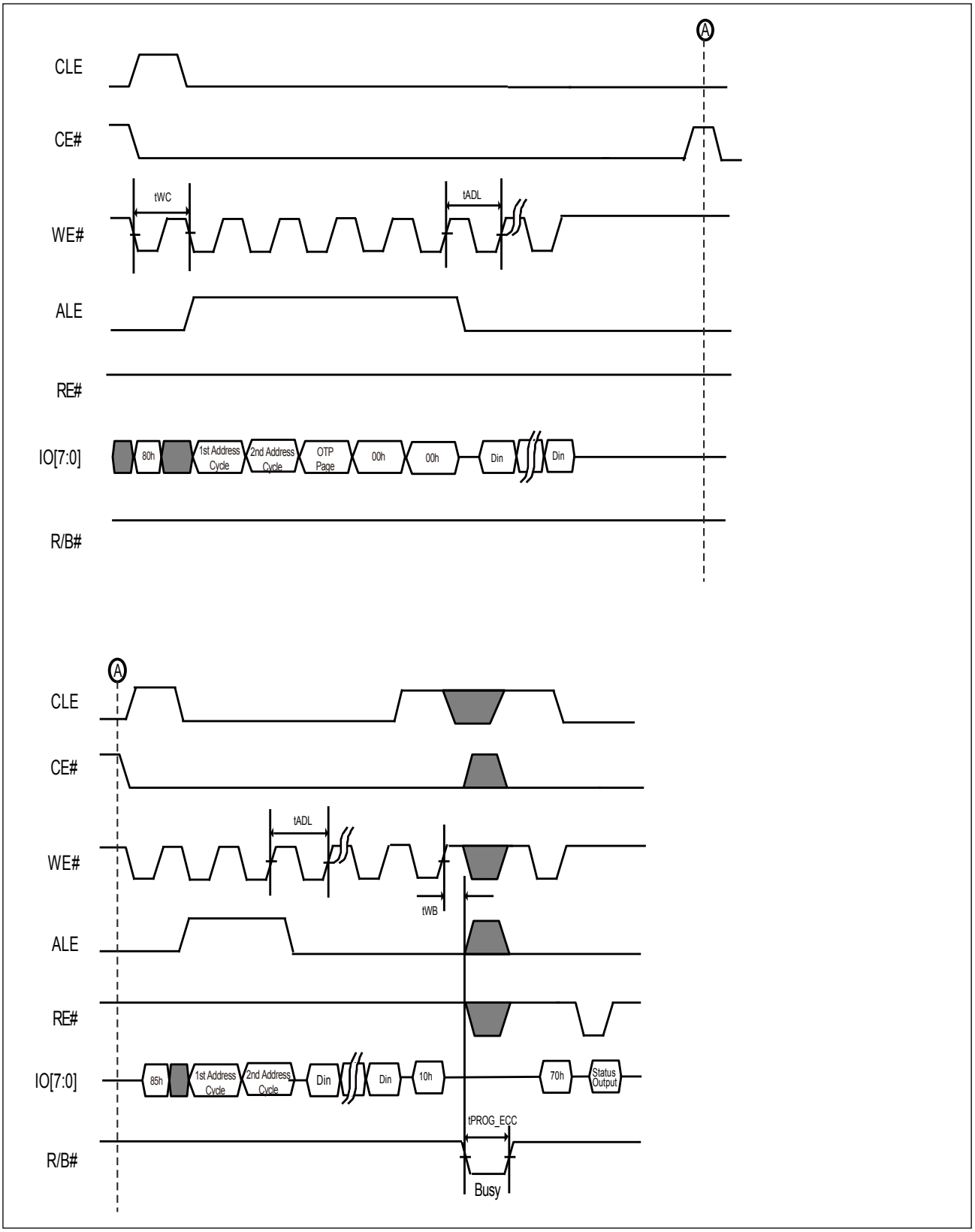

OTP Protection Operation

To prevent the further OTP data to be changed, the OTP protection mode operation is necessary. To enter the OTP protection mode, it can be done by using the Set Feature command (EFh) and followed by the feature address (90h) and then input the 03h to P1 and 00h to P2-P4 of sub-Feature Parameter data (please refer to the sub-Feature Parameter table). And then the normal page program command (80h-10h) with the address 00h before the 10h command is required.

The OTP Protection mode is operated by the whole OTP area instead of individual OTP page. Once the OTP protection mode is set, the OTP area cannot be programmed or unprotected again.

Figure 31. AC Waveforms for OTP Protection Operation

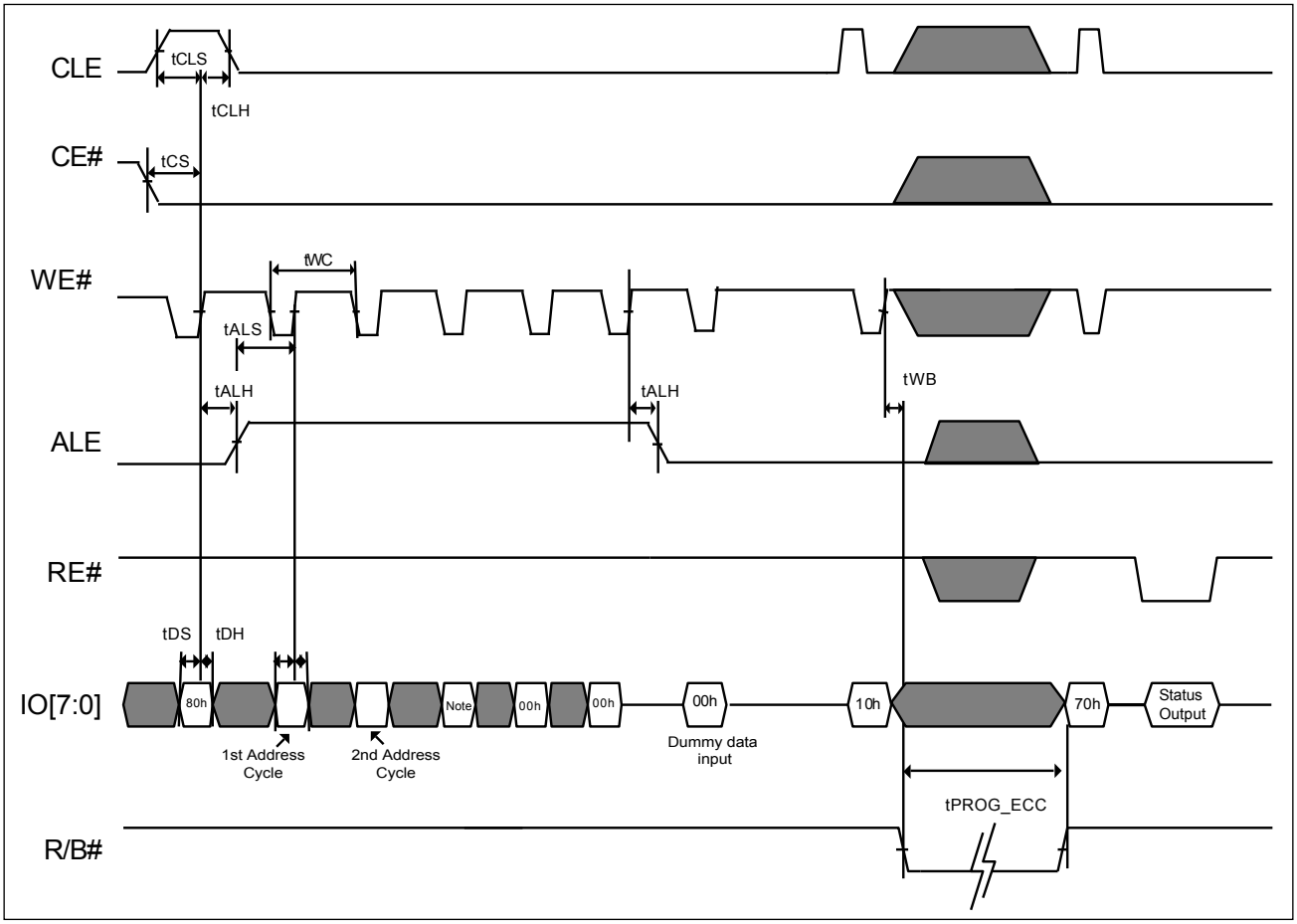

Note: *This address cycle can be any value since the OTP protection protects the entire OTP area instead of individual OTP page*

6-12-4. Internal ECC Always Enabled

The internal ECC logic may detect 5-bit error and correct 4-bit error. The internal ECC is always enabled. After the data transfer time (tR_ECC) is completed, a Status Read command (70h) is required to check any uncorrectable read error happened. Please refer to **Table 4-1. Status Output and Table 4-2. ECC Bit Status.**

The constraint of the internal ECC operation:

- The ECC protection coverage: please refer to **Table 7-1 & 7-2. The Distribution of ECC Segment and Spare Area**. Only the grey areas are under internal ECC protection when the internal ECC is enabled.
- The number of partial-page program is not 4 in an ECC segment, the user need to program the main area (512B) + spare area (1st 8-byte for 4Gb and whole 16-byte for 1Gb/2Gb) together at one time of program operation, so the ECC parity code can be calculated properly and stored in the additional hidden spare area.

Table 7-1 For 4Gb, the Distribution of ECC Segment and Spare Area in a Page

Main Area (2KB)				Spare Area (64B)							
Main0	Main1	Main2	Main3	Spare0(16B)		Spare1(16B)		Spare2(16B)		Spare3(16B)	
(512B)	(512B)	(512B)	(512B)	8B	8B (Reserved)	8B	8B (Reserved)	8B	8B (Reserved)	8B	8B (Reserved)

Note: *Grey color area: Under ECC protection*

Table 7-2 For 1Gb/2Gb, the Distribution of ECC Segment and Spare Area in a Page

Main Area (2KB)				Spare Area (64B)			
Main0	Main1	Main2	Main3	Spare0(16B)	Spare1(16B)	Spare2(16B)	Spare3(16B)
(512B)	(512B)	(512B)	(512B)	16B	16B	16B	16B

Note: *Grey color area: Under ECC protection*

6-13. Two-Plane Operations

The 2Gb/4Gb NAND device is divided into two planes for performance improvement. In the two-plane operation, the NAND device may proceed the same type operation (for example- Program, or Erase) on the two planes concurrent or overlapped by the two-plane command sets. The different type operations cannot be done in the two-plane operations; for example, it cannot be done to erase one plane and program the other plane concurrently.

The plane address A18 must be different from each selected plane address. The page address A12-A17 of individual plane must be the same for two-plane operation.

The Status Read command(70h) may check the device status in the two-plane operation, if the result is failed and then the Status Enhanced Read (78h) may check which plane is failed.

6-14. Two-plane Program (ONFI) and Two-plane Cache Program (ONFI)

The two-plane program command (80h-11h) may input data to cache buffer and wait for the final plane data input with command (80h-10h) and then transfer all data to NAND array. As for the two-plane cache program operation, it can be achieved by a two-plane program command (80h-11h) with a cache program command (80h-15h), and the final address input with the confirm command (80h-10h). Please refer to the waveforms of two-plane program and two-plane cache program for details. The random data input command (85h) can be also used in the two-plane program operation for changing the column address, please refer to the waveform of two-plane program with random data input.

Notes:

1. Page number should be the same for both planes.

2. Block address [29:18] can be different.

For examples:

If the user issues 80h-(block address 5h, page address 5h) -11h - 80h - (block address - 18h, page address 5h) - 10h, the programmed page is

- Plane 0: block address 18h, page address 5h

- Plane 1: block address 5h, page address 5h

*(**Note**: Block address = A [29:18], page address = A [17:12])*

Figure 32-1. AC Waveforms for Two-plane Program (ONFI)

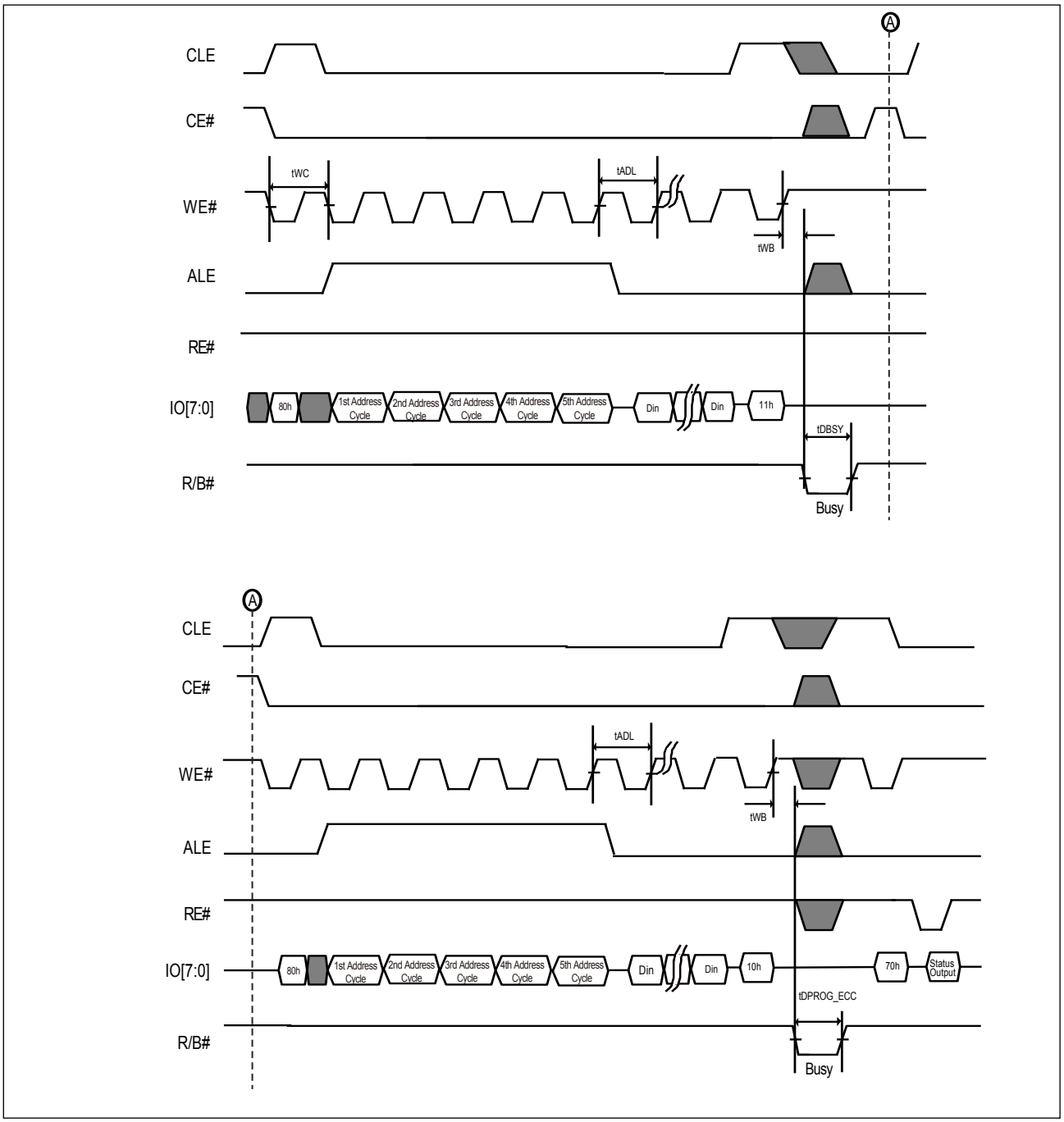

Figure 32-2. AC Waveforms for Page Program Random Data Two-plane (ONFI)

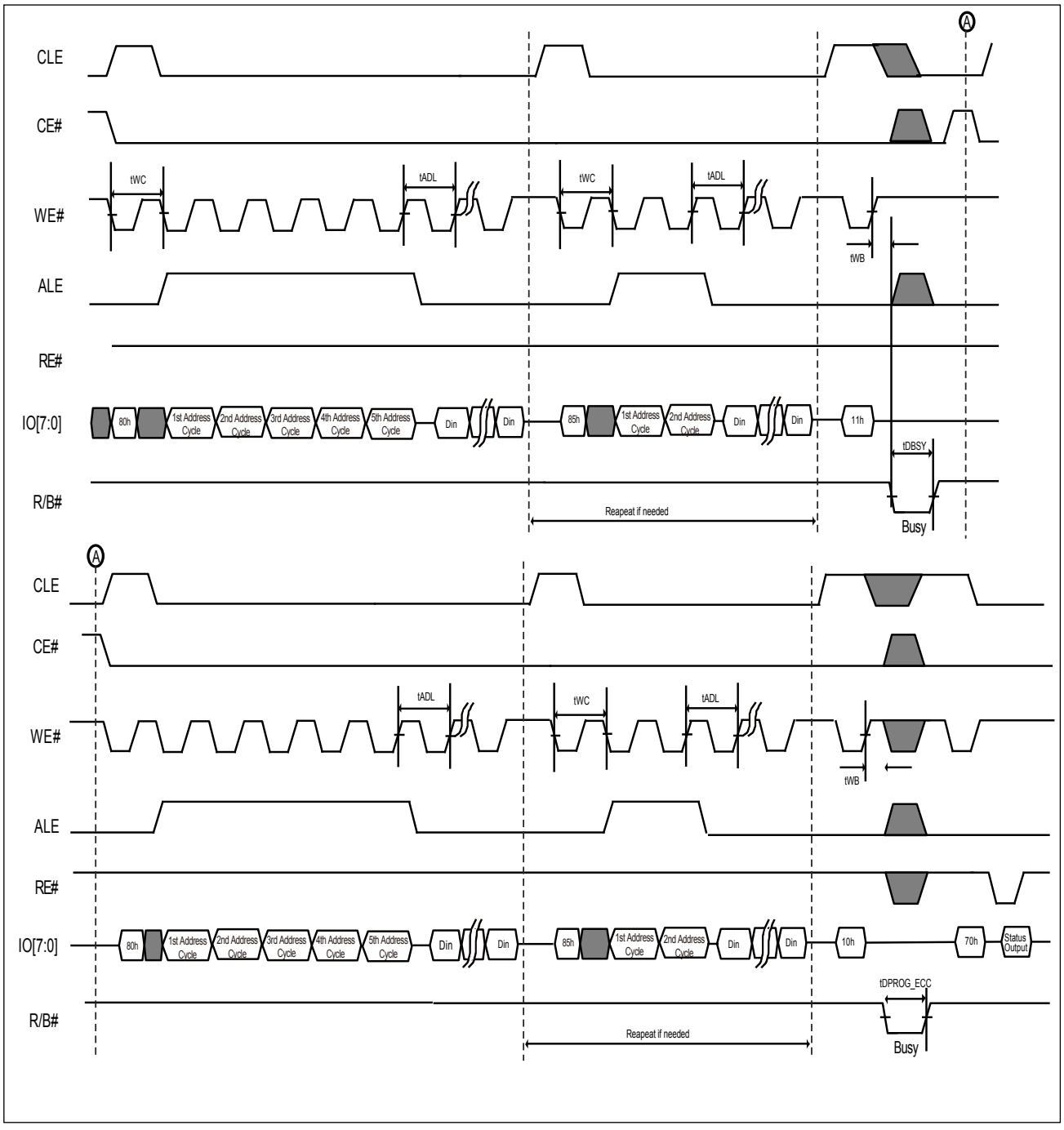

Figure 33. AC Waveforms for Two-plane Cache Program (ONFI)

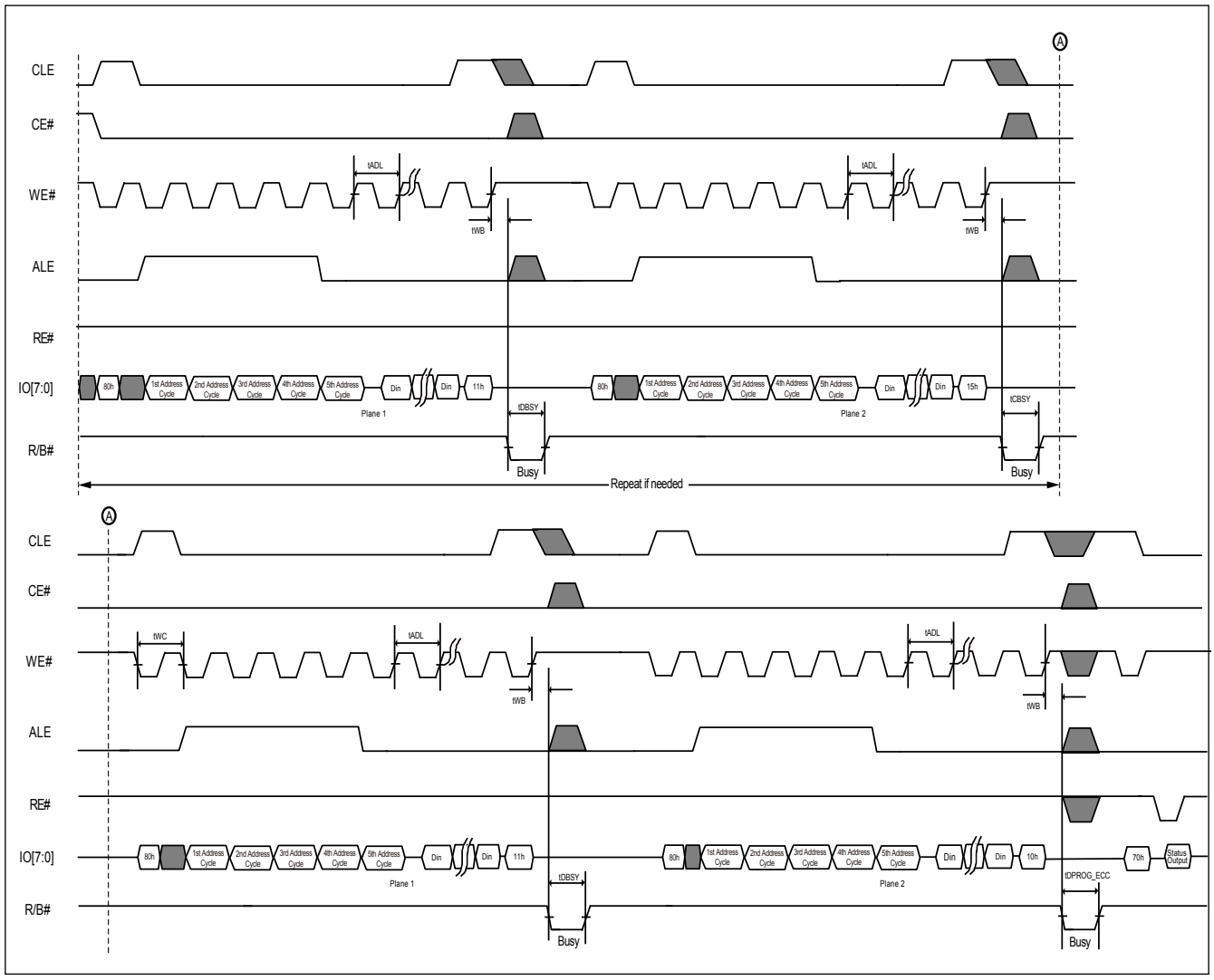

6-15. Two-plane Block Erase (ONFI)

The two-plane erase command (60h-D1h) may erase the selected blocks in parallel from each plane, with setting the 1st and 2nd block address by (60h-D1h) & (60h-D0h) command and then erase two selected blocks from NAND array. Please refer to the waveforms of two-plane erase for details.

Figure 34. AC Waveforms for Two-plane Erase (ONFI)

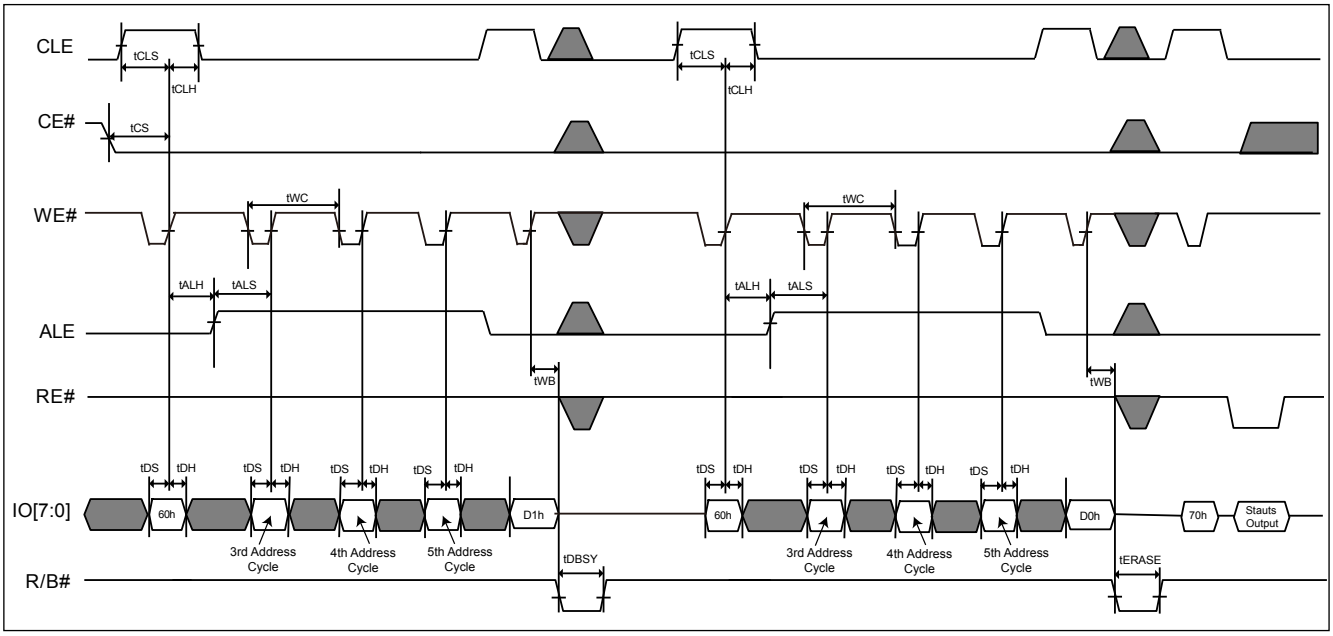

7. PARAMETERS

7-1. ABSOLUTE MAXIMUM RATINGS

Temperature under Bias	-50°C to +125°C
Storage temperature	-65°C to +150°C
All input voltages with respect to ground (Note 2)	-0.6V to 4.6V
VCC supply voltage with respect to ground (Note 2)	-0.6V to 4.6V
ESD protection	>2000V

Notes:

1. *Minimum voltage may undershoot to -2V for the period of time less than 20ns.*
2. *The reliability of device may be impaired by exposing to extreme maximum rating conditions for long range of time.*
3. *Permanent damage may be caused by the stresses higher than the "Absolute Maximum Ratings" listed.*

Table 8. Operating Range

Temperature	VCC	Tolerance
-40°C to +85°C	+3.3V	2.7 ~ 3.6V

Table 9. DC Characteristics

Symbol	Parameter	Test Conditions	Min.	Typical	Max.	Unit	Notes
VIL	Input low level		-0.3		0.2VCC	V	
VIH	Input high level		0.8VCC		VCC + 0.3	V	
VOL	Output low voltage	IOL= 2.1mA, VCC= VCC Min.			0.2	V	
VOH	Output high voltage	IOH= -400uA, VCC= VCC Min.	VCC-0.2V			V	
ISB1	VCC standby current (CMOS)	CE# = VCC -0.2V, WP# = 0/VCC		10	50	uA	
ISB2	VCC standby current (TTL)	CE# = VIH Min., WP# = 0/VCC			1	mA	
ICC0	Power on current (Including POR current)				30	mA	
ICC1	VCC active current (Sequential Read)	tRC Min., CE# = VIL, IOUT= 0mA		20	30	mA	2
ICC2	VCC active current (Program)			20	30	mA	1, 2
ICC3	VCC active current (Erase)			15	30	mA	
ILI	Input leakage current	VIN= 0 to VCC Max.			+/- 10	uA	
ILO	Output leakage current	VOUT= 0 to VCC Max.			+/- 10	uA	
ILO (R/B#)	Output current of R/B# pin	VOL=0.4V	8	10		mA	

Notes:

1. *The typical program current (ICC2) for two-plane program operation is 25mA.*
2. *ICC1/ICC2 typical value is 15mA for 1Gb.*

Table 10. Capacitance

TA = +25°C, F = 1 MHz

Symbol	Parameter	Typ.	Max.	Units	Conditions
CIN	Input capacitance		10	pF	VIN = 0 V
COUT	Output capacitance		10	pF	VOUT = 0 V

Table 11. AC Testing Conditions

Testing Conditions	Value	Unit
Input pulse level	0 to VCC	V
Output load capacitance	1TTL+CL(50)	pF
Input rise and fall time	5	ns
Input timing measurement reference levels	VCC/2	V
Output timing measurement reference levels	VCC/2	V

Table 12. Program and Erase Characteristics

Symbol	Parameter		Min.	Typ.	Max.	Unit	Note
tPROG_ECC	Page programming time under internal ECC enalbed			320	600	us	
tDPROG_ECC	Two-plane programming time under internal ECC enalbed			350	600	us	
tCBSY (Program)	Dummy busy time for cache program	2G/4G		3	600	us	1
		1G		25	600	us	
tDBSY	The busy time for two-plane program/erase operation			0.5	1	us	
tFEAT	The busy time for Set Feature/ Get Feature				1	us	
tOBSY_ECC	The busy time for OTP program at OTP protection mode under internal ECC enabled				50	us	
NOP	Number of partial program cycles in same page				4	cycles	
tERASE (Block)	Block erase time			1	3.5	ms	

Note:

1: Both 2Gb and 4Gb owns an additional cache to improve the busy time.

Table 13. AC Characteristics

Symbol	Parameter	Min.	Typical	Max.	Unit	Note
tCLS	CLE setup time	10			ns	1
tCLH	CLE hold time	5			ns	1
tCS	CE# setup time	15			ns	1
tCH	CE# hold time	5			ns	1
tWP	Write pulse width	10			ns	1
tALS	ALE setup time	10			ns	1
tALH	ALE hold time	5			ns	1
tDS	Data setup time	7			ns	1
tDH	Data hold time	5			ns	1
tWC	Write cycle time	20			ns	1
tWH	WE# high hold time	7			ns	1
tADL	Last address latched to data loading time during program operations	70			ns	1
tWW	WP# transition to WE# high	100			ns	1
tRR	Ready to RE# falling edge	20			ns	1
tRP	Read pulse width	10			ns	1
tRC	Read cycle time	20			ns	1
tREA	RE# access time (serial data access)			16	ns	1
tCEA	CE# access time			25	ns	1
tRLOH	RE#-low to data hold time (EDO)	5			ns	
tOH	Data output hold time	15			ns	1
tRHZ	RE#-high to output-high impedance			60	ns	1
tCHZ	CE#-high to output-high impedance			50	ns	1
tCOH	CE# high to output hold time	15			ns	
tREH	RE# high hold time	7			ns	1
tIR	Output high impedance to RE# falling edge	0			ns	1
tRHW	RE# high to WE# low	60			ns	1
tWHR	WE# high to RE# low	60			ns	1
tR_ECC	The data transfering from array to buffer under internal ECC enabled		45	70	us	1
tWB	WE# high to busy			100	ns	1
tCLR	CLE low to RE# low	10			ns	1
tAR	ALE low to RE# low	10			ns	1
tRST	Device reset time (Idle/ Read/ Program/ Erase)			5/10/500	us	1

Notes: *1. ONFI Mode 5 compliant.*

8. OPERATION MODES: LOGIC AND COMMAND TABLES

Address input, command input and data input/output are managed by the CLE, ALE, CE#, WE#, RE# and WP# signals, as shown in **Table 14. Logic Table** below.

Program, Erase, Read and Reset are four major operations modes controlled by command sets, please refer to **Table 15-1** and **15-2**.

Table 14. Logic Table

Mode	CE#	RE#	WE#	CLE	ALE	WP#
Address Input (Read Mode)	L	H	↑	L	H	X
Address Input (Write Mode)	L	H	↑	L	H	H
Command Input (Read Mode)	L	H	↑	H	L	X
Command Input (Write Mode)	L	H	↑	H	L	H
Data Input	L	H	↑	L	L	H
Data Output	L	↓	H	L	L	X
During Read (Busy)	X	H	H	L	L	X
During Programming (Busy)	X	X	X	X	X	H
During Erasing (Busy)	X	X	X	X	X	H
Program/Erase Inhibit	X	X	X	X	X	L
Stand-by	H	X	X	X	X	0V/VCC

Notes:

1. *H = VIH; L = VIL; X = VIH or VIL*
2. *WP# should be biased to CMOS high or CMOS low for stand-by.*

Table 15-1. HEX Command Table

	First Cycle	Second Cycle	Acceptable While Busy
Read Mode	00H	30H	
Random Data Input	85H	-	
Random Data Output	05H	E0H	
ID Read	90H	-	
Parameter Page Read (ONFI)	ECH	-	
Unique ID Read (ONFI)	EDH	-	
Set Feature (ONFI)	EFH	-	
Get Feature (ONFI)	EEH	-	
Reset	FFH	-	V
Page Program	80H	10H	
Cache Program	80H	15H	
Block Erase	60H	D0H	
Status Read	70H	-	V
Status Enhanced Read (ONFI)[1]	78H	-	V

Table 15-2. Two-plane Command Set (For 2Gb/4Gb)

	First Cycle	Second Cycle	Third Cycle	Fourth Cycle
Two-plane Program (ONFI)[1]	80H	11H	80H	10H
Two-plane Cache Program (ONFI)[1]	80H	11H	80H	15H
Two-plane Block Erase (ONFI)[1]	60H	D1H	60H	D0H

Caution: *None of the undefined command inputs can be accepted except for the command set in the above table.*

Note 1: *The command set is not valid for 1Gb.*

8-1. R/B#: Termination for The Ready/Busy# Pin (R/B#)

The R/B# is an open-drain output pin and a pull-up resistor is necessary to add on the R/B# pin. The R/B# outputs the ready/busy status of read/program/ erase operation of the device. When the R/B# is at low, the device is busy for read or program or erase operation. When the R/B# is at high, the read/program/erase operation is finished.

Rp Value Guidence

The rise time of the R/B# signal depends on the combination of Rp and capacitive loading of the R/B# circuit. It is approximately two times constants (Tc) between the 10% and 90% points on the R/B# waveform.

$$T_C = R \times C$$

Where R = R_p (Resistance of pull-up resistor), and C = C_L (Total capacitive load)

The fall time of the R/B# signal majorly depends on the output impedance of the R/B# signal and the total load capacitance.

$$Rp\ (Min.) = \frac{Vcc\ (Max.) - VOL\ (Max.)}{I_{OL} + \Sigma I_L}$$

Notes:

1. *Considering of the variation of device-by-device, the above data is for reference to decide the resistor value.*
2. *Rp maximum value depends on the maximum permissible limit of tr.*
3. *IL is the total sum of the input currents of all devices tied to the R/B pin.*

Figure 35. R/B# Pin Timing Information

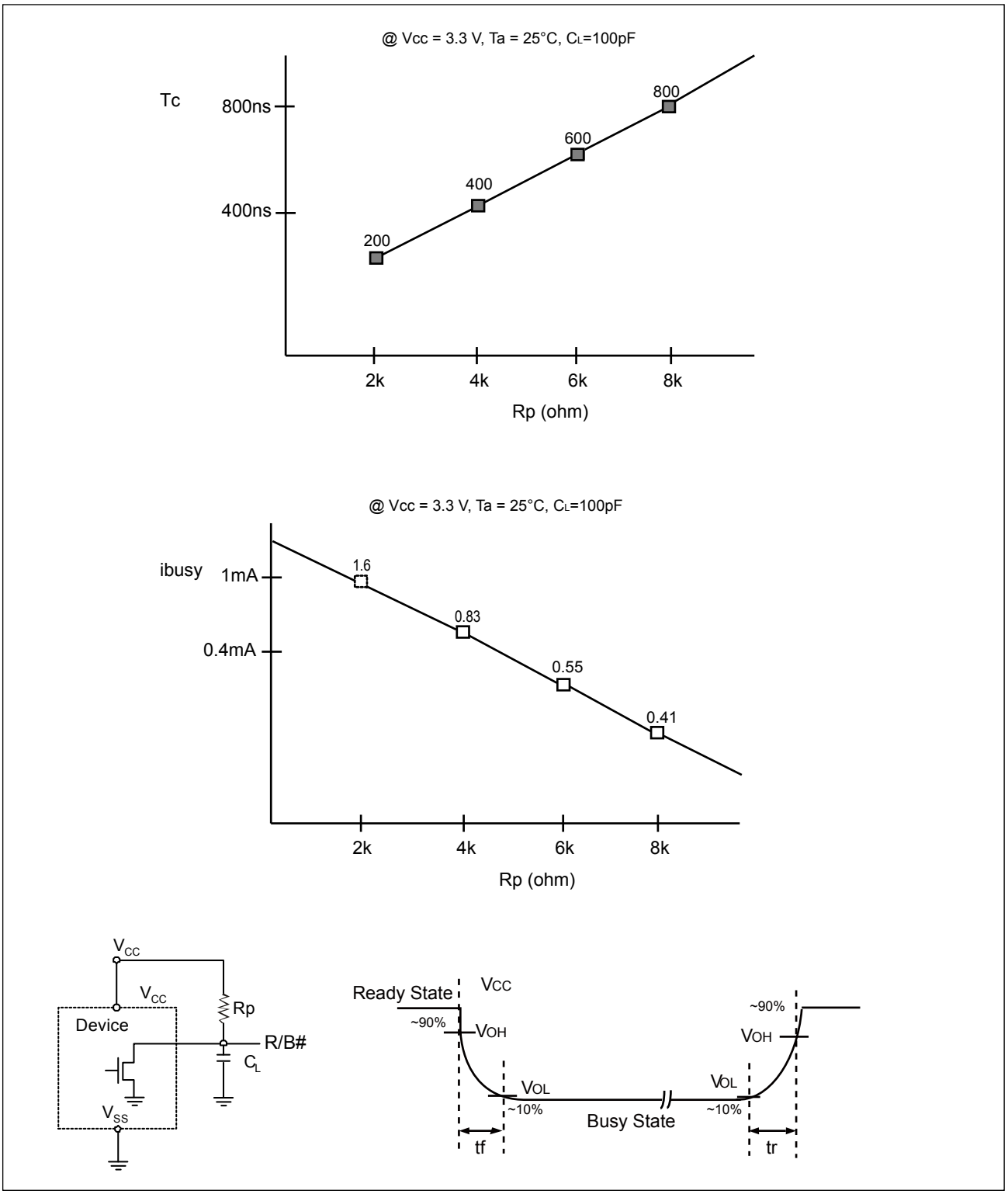

8-2. Power On/Off Sequence

After the Chip reaches the power on level (Vth = Vcc min.), the internal power on reset sequence will be triggered. During the internal power on reset period, no any external command is accepted. There are two ways to identify the termination of the internal power on reset sequence. Please refer to **Figure 36. Power On/Off Sequence**.

- R/B# pin
- Wait 1 ms

During the power on and power off sequence, it is recommended to keep the WP# = Low for internal data protection.

Figure 36. Power On/Off Sequence

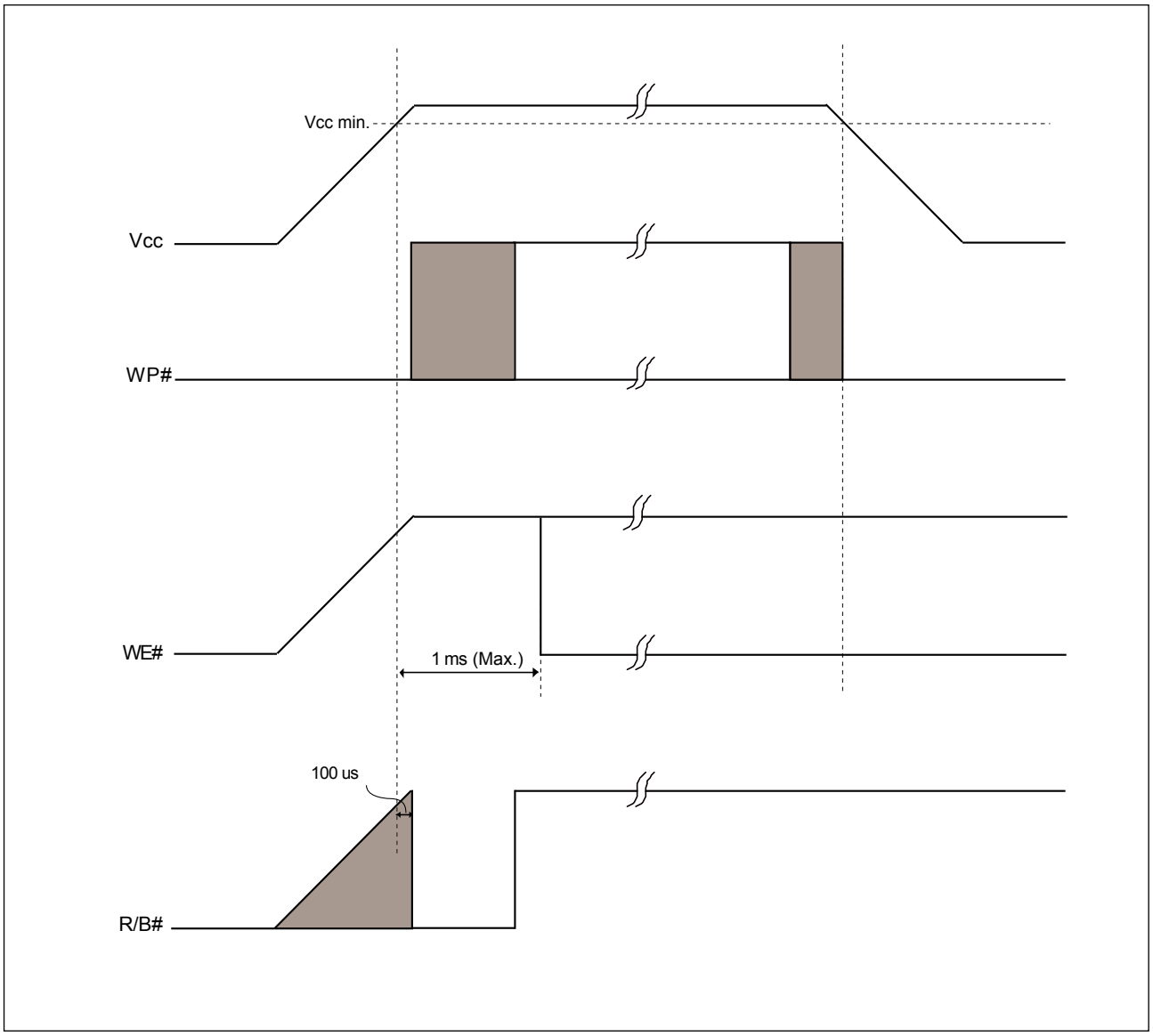

8-2-1. WP# Signal

WP# going Low can cause program and erase operations automatically reset.

The enabling & disabling of the both operations are as below:

Figure 37-1. Enable Programming of WP# Signal

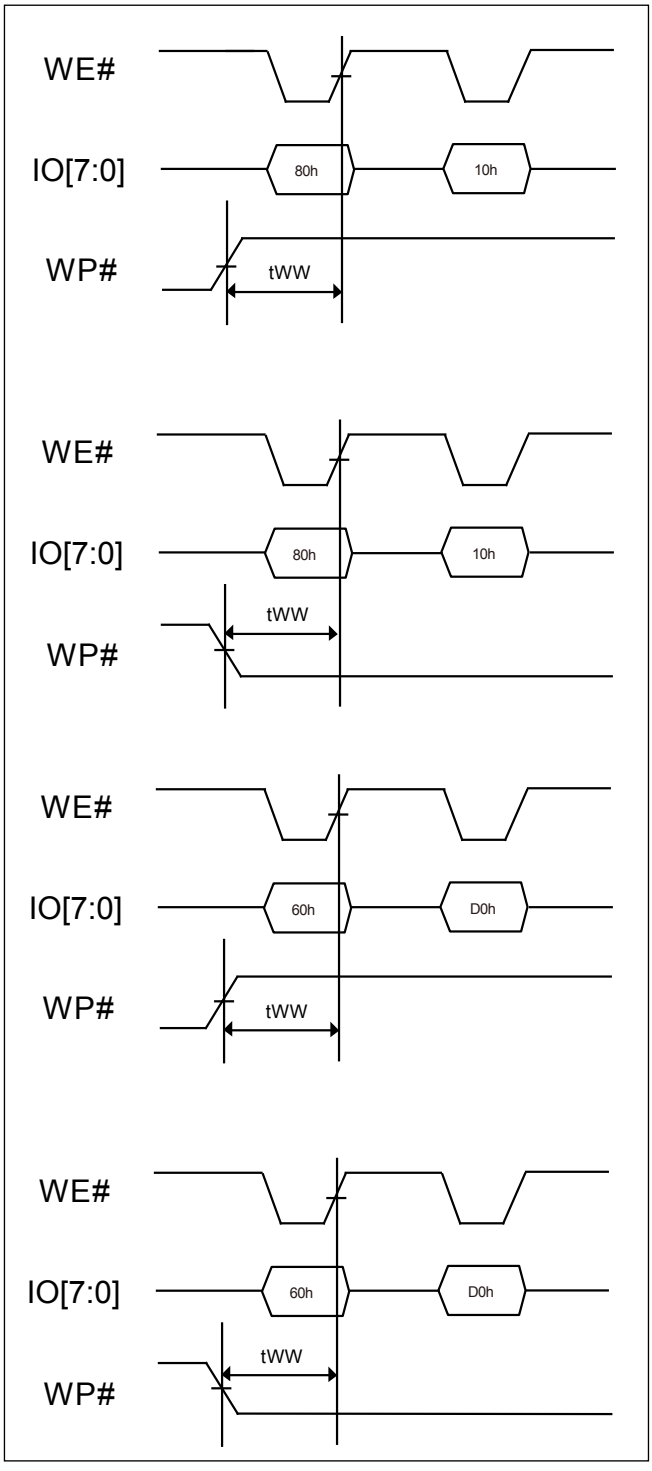

Figure 37-2. Disable Programming of WP# Signal

Figure 37-3. Enable Erasing of WP# Signal

Figure 37-4. Disable Erasing of WP# Signal

9. SOFTWARE ALGORITHM

9-1. Invalid Blocks (Bad Blocks)

The bad blocks are included in the device while it gets shipped. During the time of using the device, the additional bad blocks might be increasing; therefore, it is recommended to check the bad block marks and avoid using the bad blocks. Furthermore, please read out the bad block information before any erase operation since it may be cleared by any erase operation.

Figure 38. Bad Blocks

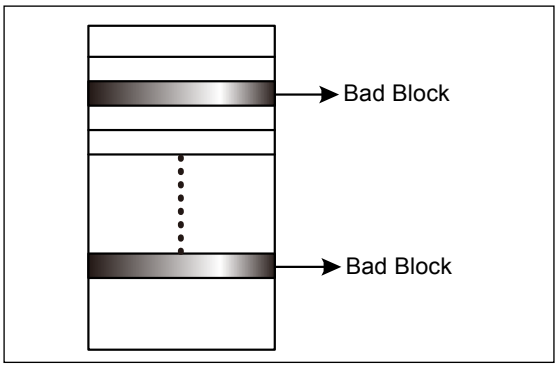

While the device is shipped, the value of all data bytes of the good blocks are FFh. The 1st bytes of the 1st and 2nd page in the spare area for bad block will be 00h. The erase operation at the bad blocks is not recommended.

After the device is installed in the system, the bad block checking is recommended. The figure shows the brief test flow by the system software managing the bad blocks while the bad blocks were found. When a block gets damaged, it should not be used any more.

Due to the blocks are isolated from bit-line by the selected gate, the performance of good blocks will not be impacted by bad ones.

Table 16. Valid Blocks

	Density	Min.	Typ.	Max.	Unit	Remark
Valid (Good) Block Number	1Gb	1004		1024	Block	Block 0 is guaranteed to be good (with internal ECC)
	2Gb	2008		2048	Block	
	4Gb	4016		4096	Block	

9-2. Bad Block Test Flow

Although the initial bad blocks are marked by the flash vendor, they could be inadvertently erased and destroyed by a user that does not pay attention to them. To prevent this from occurring, it is necessary to always know where any bad blocks are located. Continually checking for bad block markers during normal use would be very time consuming, so it is highly recommended to initially locate all bad blocks and build a bad block table and reference it during normal NAND flash use. This will prevent having the initial bad block markers erased by an unexpected program or erase operation. Failure to keep track of bad blocks can be fatal for the application. For example, if boot code is programmed into a bad block, a boot up failure may occur. The following section shows the recommended flow for creating a bad block table.

Figure 39. Bad Block Test Flow

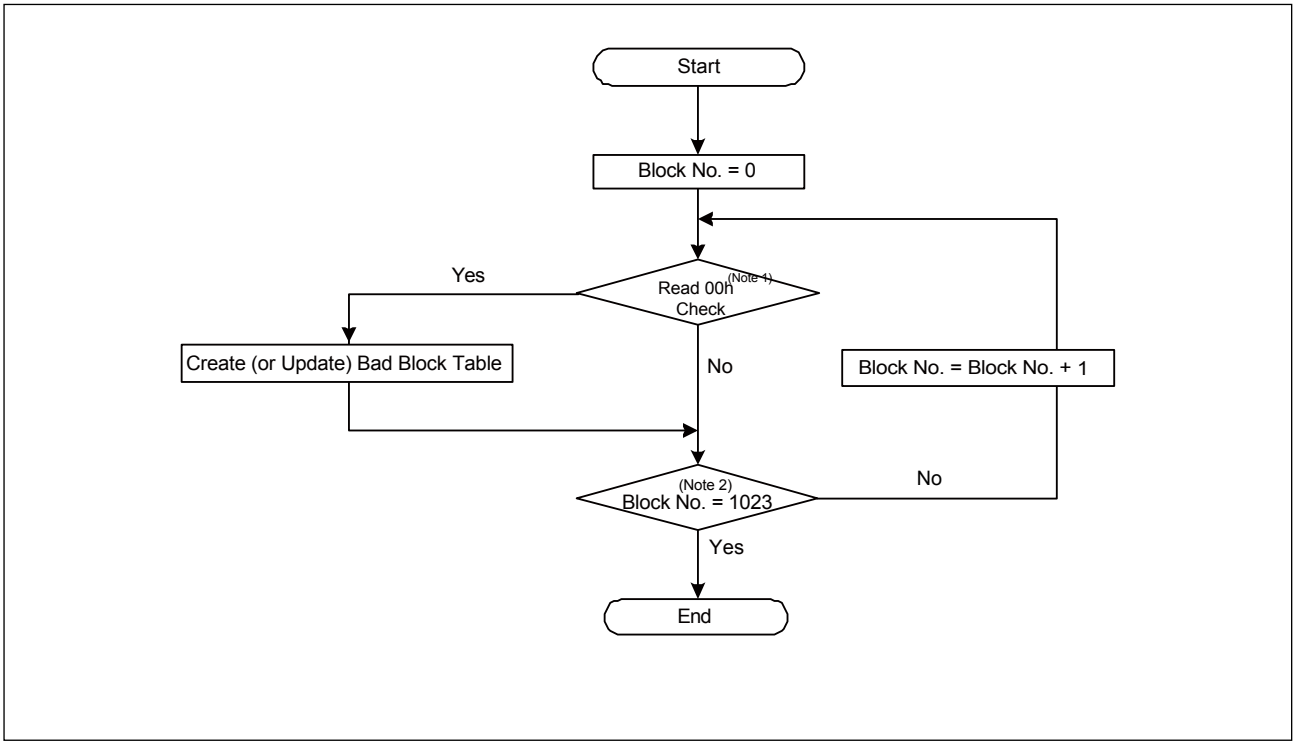

Note

1. *Read 00h check is at the 1st byte of the 1st and 2nd pages of the block spare area.*

2. *The Block No. = 1023 for 1Gb, 2047 for 2Gb, 4095 for 4Gb.*

9-3. Failure Phenomena for Read/Program/Erase Operations

The device may fail during a Read, Program or Erase operation. The following possible failure modes should be considered when implementing a highly reliable system:

Table 17. Failure Modes

Failure Mode	Detection and Countermeasure	Sequence
Erase Failure	Status Read after Erase	Block Replacement
Programming Failure	Status Read after Program	Block Replacement
Read Failure[1]	Read Failure	ECC

Note 1*: The internal ECC is always enabled, the internal ECC will handle the Read failure.*

9-4. Program

It is feasible to reprogram the data into another page (Page B) when an error occurred in Page A by loading from an external buffer. Then create a bad block table or by using another appropriate scheme to prevent further system accesses to Page A.

Figure 40. Failure Modes

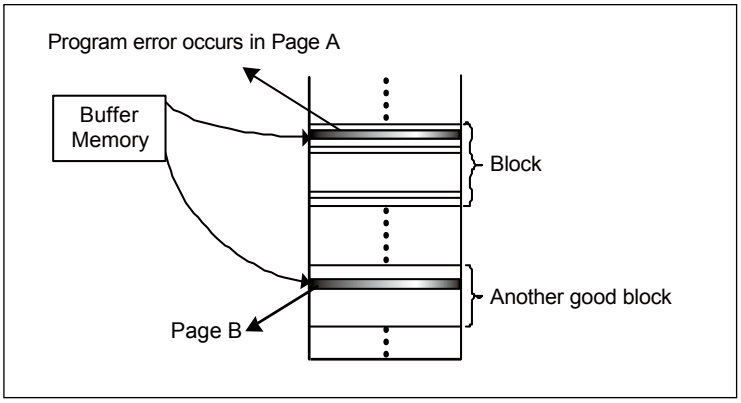

Figure 41. Program Flow Chart

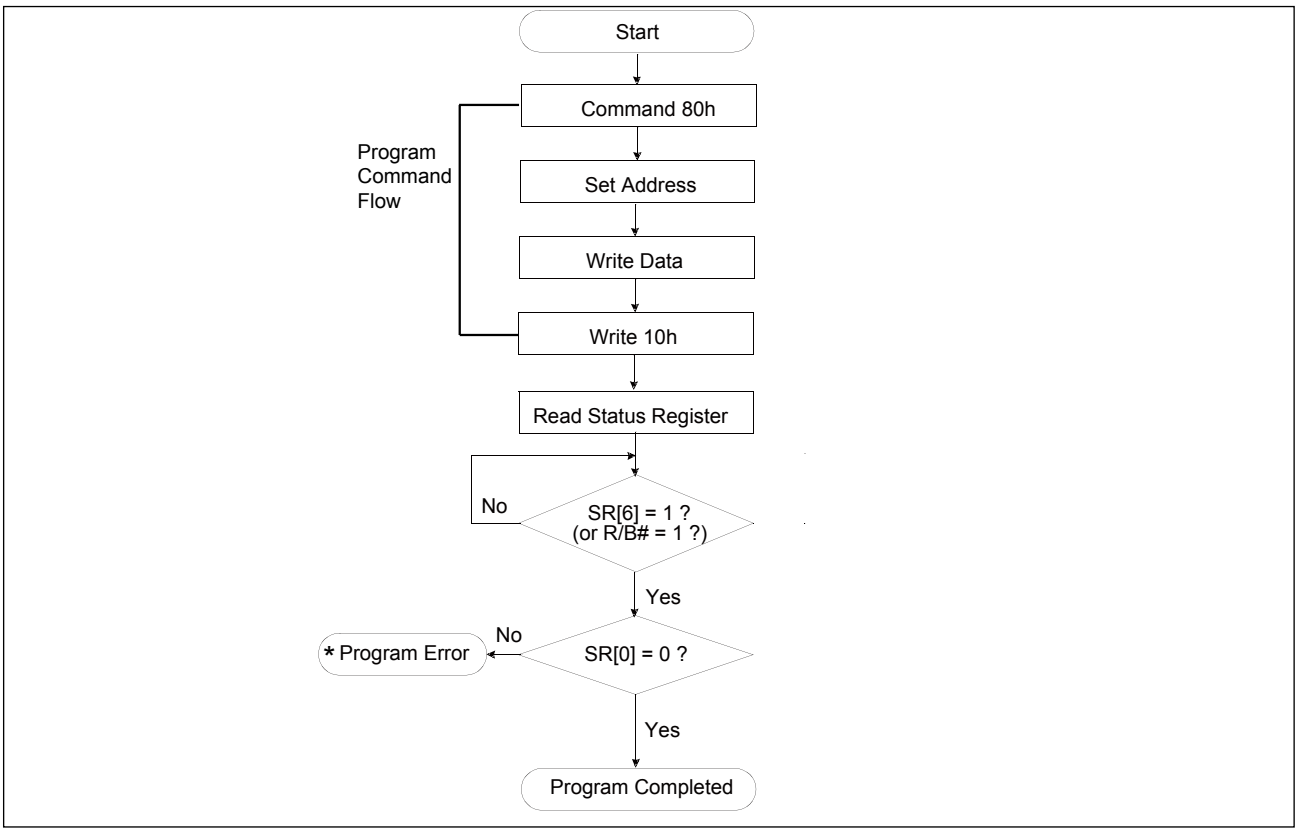

9-5. Erase

To prevent future accesses to this bad block, it is feasible to create a table within the system or by using another appropriate scheme when an error occurs in an Erase operation.

Figure 42. Erase Flow Chart

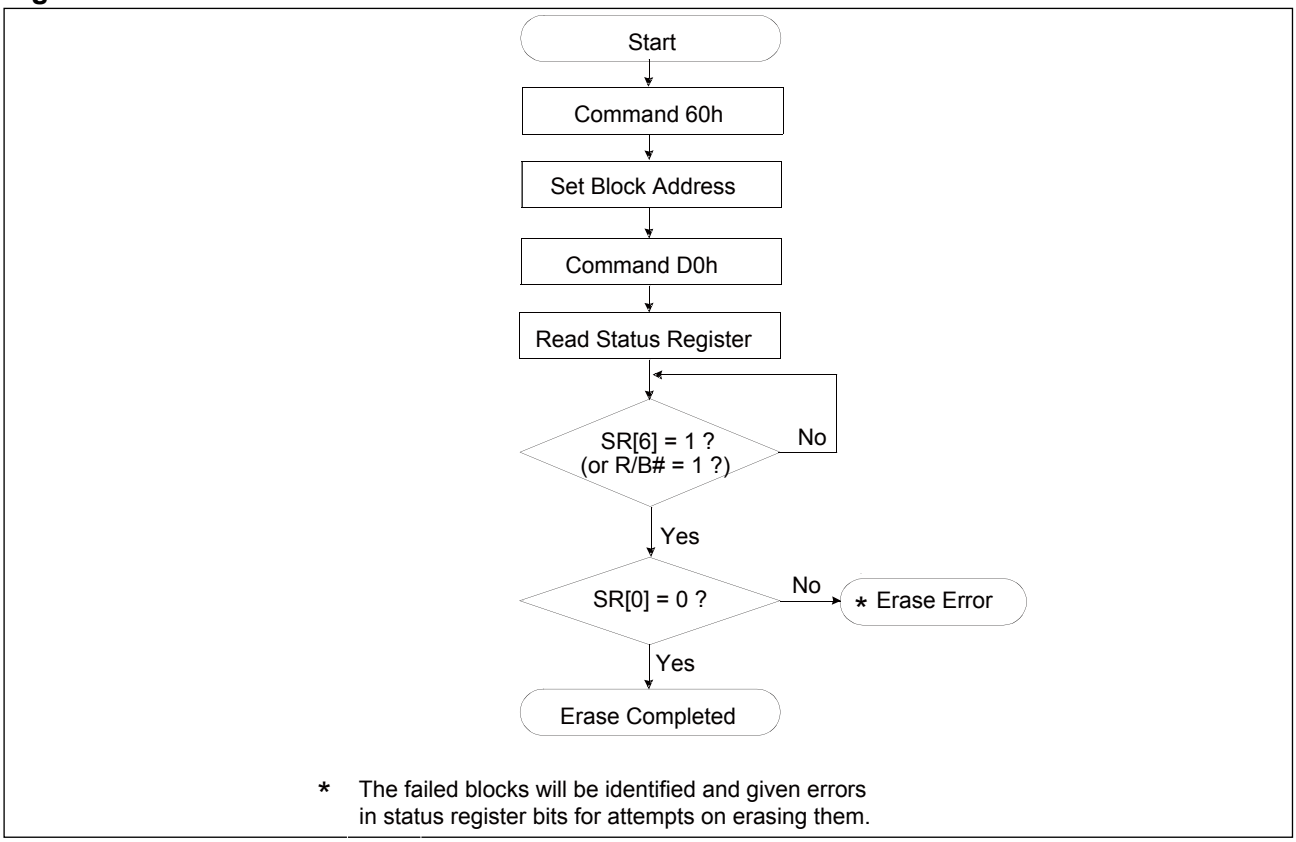

Figure 43. Read Flow Chart

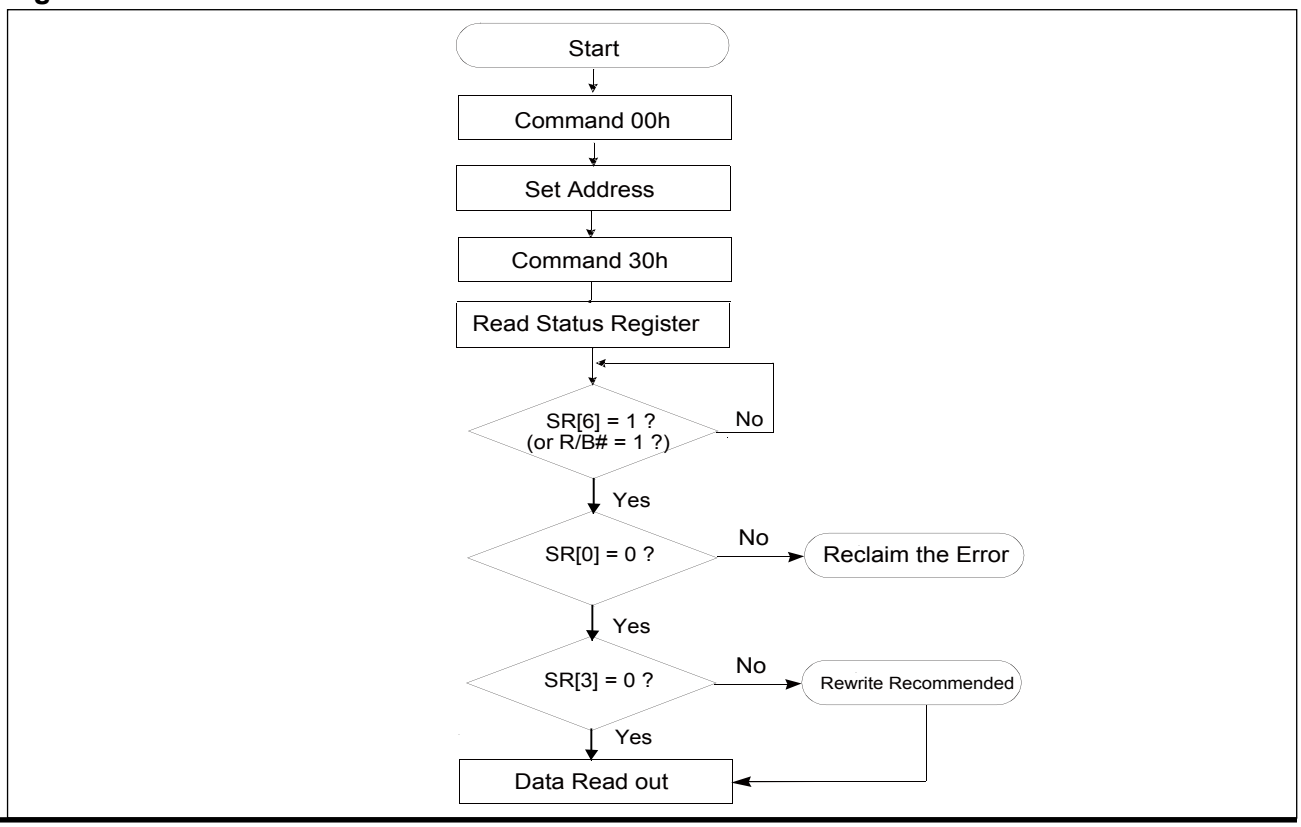

10. PACKAGE INFORMATION

Title: Package Outline for TSOP(I) 48L (12X20mm)NORMAL FORM

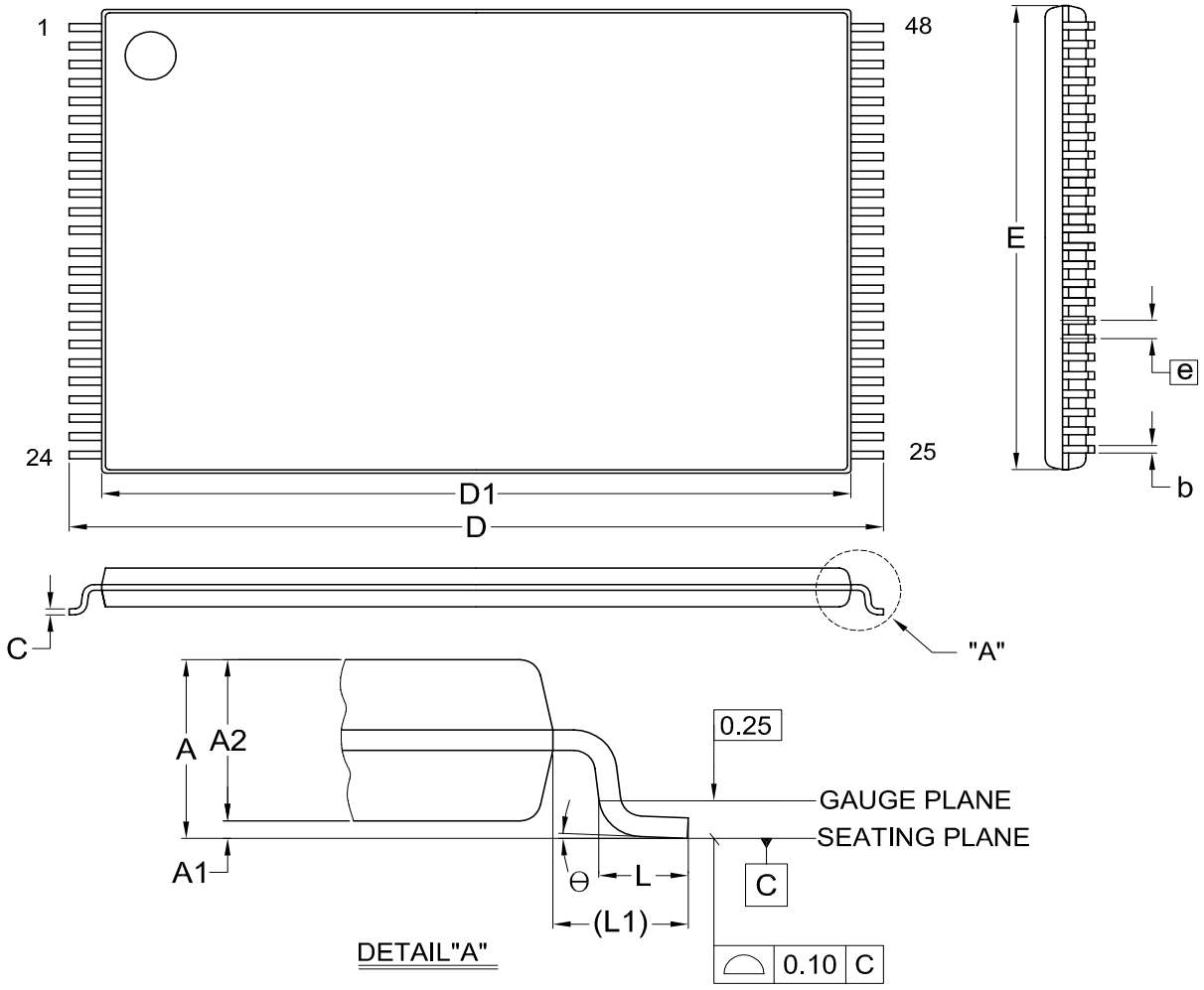

Dimensions (inch dimensions are derived from the original mm dimensions)

SYMBOL / UNIT		A	A1	A2	b	C	D	D1	E	e	L	L1	Θ
mm	Min.	—	0.05	0.95	0.17	0.10	19.80	18.30	11.90	—	0.50	0.70	0
	Nom.	---	0.10	1.00	0.20	0.13	20.00	18.40	12.00	0.50	0.60	0.80	5
	Max.	1.20	0.15	1.05	0.27	0.21	20.20	18.50	12.10	—	0.70	0.90	8
Inch	Min.	---	0.002	0.037	0.007	0.004	0.780	0.720	0.469	—	0.020	0.028	0
	Nom.	---	0.004	0.039	0.008	0.005	0.787	0.724	0.472	0.020	0.024	0.031	5
	Max.	0.047	0.006	0.041	0.011	0.008	0.795	0.728	0.476	—	0.028	0.035	8

DWG.NO.	REVISION	REFERENCE			ISSUE DATE
		JEDEC	EIAJ		
6110-1607	8	MO-142			2007/08/03

Title: Package Outline for 63-VFBGA (9x11x1.0mm, Ball-pitch: 0.8mm, Ball-diameter: 0.45mm)

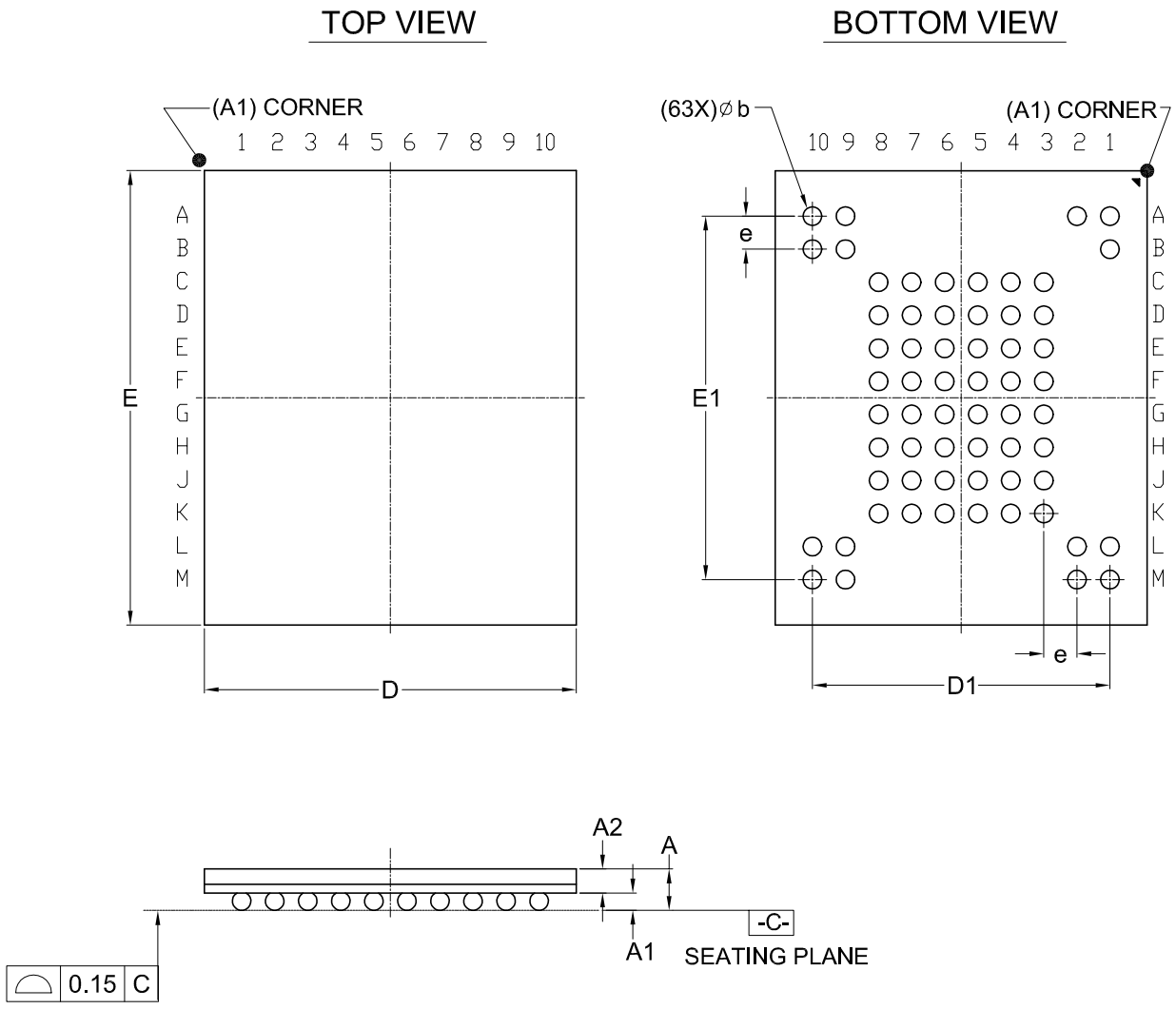

Dimensions (inch dimensions are derived from the original mm dimensions)

SYMBOL / UNIT		A	A1	A2	b	D	D1	E	E1	e
mm	Min.	---	0.25	0.55	0.40	8.90	---	10.90	—	—
	Nom.	---	0.30	---	0.45	9.00	7.20	11.00	8.80	0.80
	Max.	1.00	0.40	---	0.50	9.10	---	11.10	—	—
Inch	Min.	—	0.010	0.022	0.016	0.350	---	0.429	—	—
	Nom.	—	0.012	---	0.018	0.354	0.283	0.433	0.346	0.031
	Max.	0.039	0.016	---	0.020	0.358	---	0.437	—	—

Dwg. No.	Revision	Reference			
		JEDEC	EIAJ		
6110-4267	0				

11. REVISION HISTORY

Rev. No.	Descriptions	Page	Date
0.00	1. Initial Released	All	APR/26/2013
0.01	1. Spec improvement: tPROG, tCBSY, tRCBSY, tERASE, VOH, VOL, ICC0, ICC1, ICC2, ICC3, tRHW	P61~63	JUN/23/2014
	2. Removed the ERE feature	ALL	
	3. Removed the feature address of 01h, 80h, 81h, 91h	ALL	
	4. Removed the two-plane read feature	ALL	
	5. Replacing the IST parameter with the ICC0 in DC Table	P61	
	6. Added P/E endurance typical 100K	P6, 42	
	7. Supplement of the rule from low to high address for page program	P25	
	8. Added a note for Sequence of Page Cache Program	P30	
	9. Added notes of parameter page for the CRC formula.	P43	
	10. Correced typos for Two-plane program (ONFI) content & waveforms	P51-53	
	11. Added a note for AC waveform of OTP protection operation	P54	
	12. Adding more explanations on the two-plane operation	P55	
	13. Removed tDR_ECC from AC Table	P59	
	14. Added a note for Bad Block Test Flow chart.	P67	
	15. Supplement the recommendation for bad block management	P71	
	16. Removed Cache Read Feature	ALL	
0.02	1. The default value of feature address 90h is 08h.	P42, 45	JUN/26/2014
0.03	1. Added "Advanced Information" title to all pages (Originally only available on page 6)	ALL	SEP/11/2014
1.0	1. Removed the "Advanced Information" title as production version datasheet.	ALL	MAR/06/2015
	2. Corrected tALS timing waveform as ALE high till WE# high	P21,49	
	3. Corrected waveform of OTP protection tWB timing from WE# high to busy	P49	
	4. Added note1 of tCBSY for 2Gb/4Gb	P58	
	5. Revised R/B# timing of Power-on as 100us	P64	
	6. Revised the bad block mark from non-FFh to 00h, also revised the page of bad block mark from 1st or 2nd page to 1st and 2nd page	P66,67	
	7. Revised typical value of ICC1/ICC2 from 20mA to 15mA for 1Gb	P57	
	8. Added 63-ball VFBGA for 1Gb specification.	P6,8,10,73	
1.1	1. Removed the "Advanced information" from 1Gb BGA	P6,8	MAY/04/2015
	2. Supplemented "The internal ECC is disabled on the parameter page and unique ID."	P36,40	

Except for customized products which have been expressly identified in the applicable agreement, Macronix's products are designed, developed, and/or manufactured for ordinary business, industrial, personal, and/or household applications only, and not for use in any applications which may, directly or indirectly, cause death, personal injury, or severe property damages. In the event Macronix products are used in contradicted to their target usage above, the buyer shall take any and all actions to ensure said Macronix's product qualified for its actual use in accordance with the applicable laws and regulations; and Macronix as well as it's suppliers and/or distributors shall be released from any and all liability arisen therefrom.

Copyright© Macronix International Co., Ltd. 2013~2015. All rights reserved, including the trademarks and tradename thereof, such as Macronix, MXIC, MXIC Logo, MX Logo, Integrated Solutions Provider, NBit, Nbit, NBiit, Macronix NBit, eLiteFlash, HybridNVM, HybridFlash, XtraROM, Phines, KH Logo, BE-SONOS, KSMC, Kingtech, MXSMIO, Macronix vEE, Macronix MAP, Rich Audio, Rich Book, Rich TV, and FitCAM. The names and brands of third party referred thereto (if any) are for identification purposes only.

For the contact and order information, please visit Macronix's Web site at: http://www.macronix.com

MACRONIX INTERNATIONAL CO., LTD. reserves the right to change product and specifications without notice.