MX29LV640BU

64M-BIT [4M x 16] CMOS EQUAL SECTOR FLASH MEMORY

FEATURES

GENERAL FEATURES

- 4,194,304 x 16 byte structure
- One hundred twenty-eight Equal Sectors with 32K word each
  - Any combination of sectors can be erased with erase suspend/resume function
- Sector Protection/Chip Unprotect
  - Provides sector group protect function to prevent program or erase operation in the protected sector group
  - Provides chip unprotect function to allow code changes
  - Provides temporary sector group unprotect function for code changes in previously protected sector groups
- Secured Silicon Sector
  - Provides a 128-word area for code or data that can be permanently protected.
  - Once this sector is protected, it is prohibited to program or erase within the sector again.
- Single Power Supply Operation
  - 2.7 to 3.6 volt for read, erase, and program operations
- Latch-up protected to 250mA from -1V to Vcc + 1V
- Low Vcc write inhibit is equal to or less than 1.5V
- Compatible with JEDEC standard
  - Pinout and software compatible to single power supply Flash

PERFORMANCE

- High Performance
  - Access time: 90/120ns
  - Program time: 11us/word, 45s/chip (typical)
  - Erase time: 0.9s/sector, 45s/chip (typical)
- Low Power Consumption
  - Low active read current: 9mA (typical) at 5MHz
  - Low standby current: 0.2uA(typ.)
- Minimum 100,000 erase/program cycle
- 20-year data retention

SOFTWARE FEATURES

- Support Common Flash Interface (CFI)
  - Flash device parameters stored on the device and provide the host system to access.
- Erase Suspend/ Erase Resume
  - Suspends sector erase operation to read data from or program data to another sector which is not being erased
- Status Reply
  - Data# polling & Toggle bits provide detection of program and erase operation completion

HARDWARE FEATURES

- Ready/Busy (RY/BY#) Output
  - Provides a hardware method of detecting program and erase operation completion
- Hardware Reset (RESET#) Input
  - Provides a hardware method to reset the internal state machine to read mode
- ACC input pin
  - Provides accelerated program capability
- WP# pin
  - At V_{IL}, allows protection of first sector, regardless of sector protection/unprotected status
  - At V_{IH}, allows removal of protection

PACKAGE

- 48-pin TSOP
- 63-ball CSP

GENERAL DESCRIPTION

The MX29LV640BU is a 64-mega bit Flash memory organized as 4M bytes of 16 bits. MXIC's Flash memories offer the most cost-effective and reliable read/write nonvolatile random access memory. The MX29LV640BU is packaged in 48-pin TSOP and 63-ball CSP. It is designed to be reprogrammed and erased in system or in standard EPROM programmers.

The standard MX29LV640BU offers access time as fast as 90ns, allowing operation of high-speed microprocessors without wait states. To eliminate bus contention, the MX29LV640BU has separate chip enable (CE#) and output enable (OE#) controls.

MXIC's Flash memories augment EPROM functionality

with in-circuit electrical erasure and programming. The MX29LV640BU uses a command register to manage this functionality.

MXIC Flash technology reliably stores memory contents even after 100,000 erase and program cycles. The MXIC cell is designed to optimize the erase and program mechanisms. In addition, the combination of advanced tunnel oxide processing and low internal electric fields for erase and programming operations produces reliable cycling. The MX29LV640BU uses a 2.7V to 3.6V VCC supply to perform the High Reliability Erase and auto Program/Erase algorithms.

The highest degree of latch-up protection is achieved with MXIC's proprietary non-epi process. Latch-up protection is proved for stresses up to 100 milliamps on address and data pin from -1V to VCC + 1V.

AUTOMATIC PROGRAMMING

The MX29LV640BU is word programmable using the Automatic Programming algorithm. The Automatic Programming algorithm makes the external system do not need to have time out sequence nor to verify the data programmed. The typical chip programming time at room temperature of the MX29LV640BU is less than 48 seconds.

AUTOMATIC PROGRAMMING ALGORITHM

MXIC's Automatic Programming algorithm require the user to only write program set-up commands (including 2 unlock write cycle and A0H) and a program command (program data and address). The device automatically times the programming pulse width, provides the program verification, and counts the number of sequences. A status bit similar to DATA# polling and a status bit toggling between consecutive read cycles, provide feedback to the user as to the status of the programming operation.

AUTOMATIC CHIP ERASE

The entire chip is bulk erased using 50 ms erase pulses according to MXIC's Automatic Chip Erase algorithm. Typical erasure at room temperature is accomplished in less than 45 seconds. The Automatic Erase algorithm automatically programs the entire array prior to electrical erase. The timing and verification of electrical erase are controlled internally within the device.

AUTOMATIC SECTOR ERASE

The MX29LV640BU is sector(s) erasable using MXIC's Auto Sector Erase algorithm. Sector erase modes allow sectors of the array to be erased in one erase cycle. The Automatic Sector Erase algorithm automatically programs the specified sector(s) prior to electrical erase. The timing and verification of electrical erase are controlled internally within the device.

AUTOMATIC ERASE ALGORITHM

MXIC's Automatic Erase algorithm requires the user to write commands to the command register using standard microprocessor write timings. The device will automatically preprogram and verify the entire array. Then the device automatically times the erase pulse width, provides the erase verification, and counts the number of sequences. A status bit toggling between consecutive read cycles provides feedback to the user as to the status of the programming operation.

Register contents serve as inputs to an internal state-machine which controls the erase and programming circuitry. During write cycles, the command register internally latches address and data needed for the programming and erase operations. During a system write cycle, addresses are latched on the falling edge, and data are latched on the rising edge of WE# .

MXIC's Flash technology combines years of EPROM experience to produce the highest levels of quality, reliability, and cost effectiveness. The MX29LV640BU electrically erases all bits simultaneously using Fowler-Nordheim tunneling. The words are programmed by using the EPROM programming mechanism of hot electron injection.

During a program cycle, the state-machine will control the program sequences and command register will not respond to any command set. During a Sector Erase cycle, the command register will only respond to Erase Suspend command. After Erase Suspend is completed, the device stays in read mode. After the state machine has completed its task, it will allow the command register to respond to its full command set.

PIN CONFIGURATION

48 TSOP

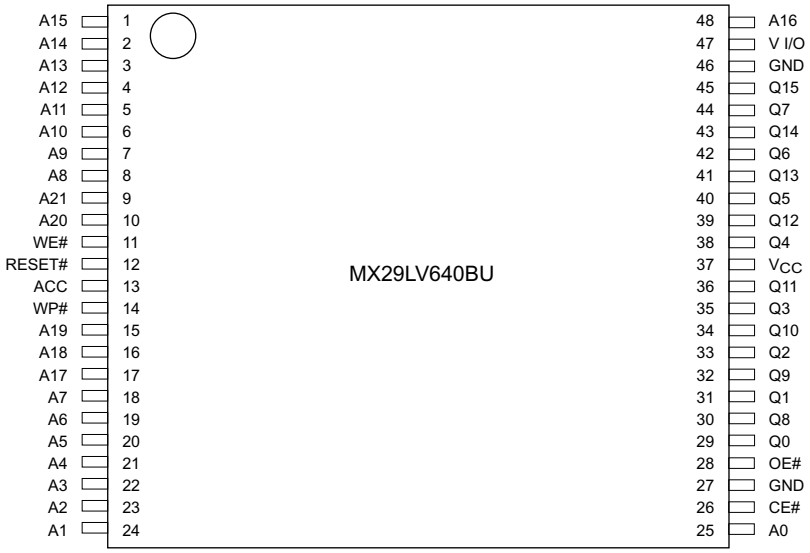

63 Ball CSP (Top View, Ball Down)

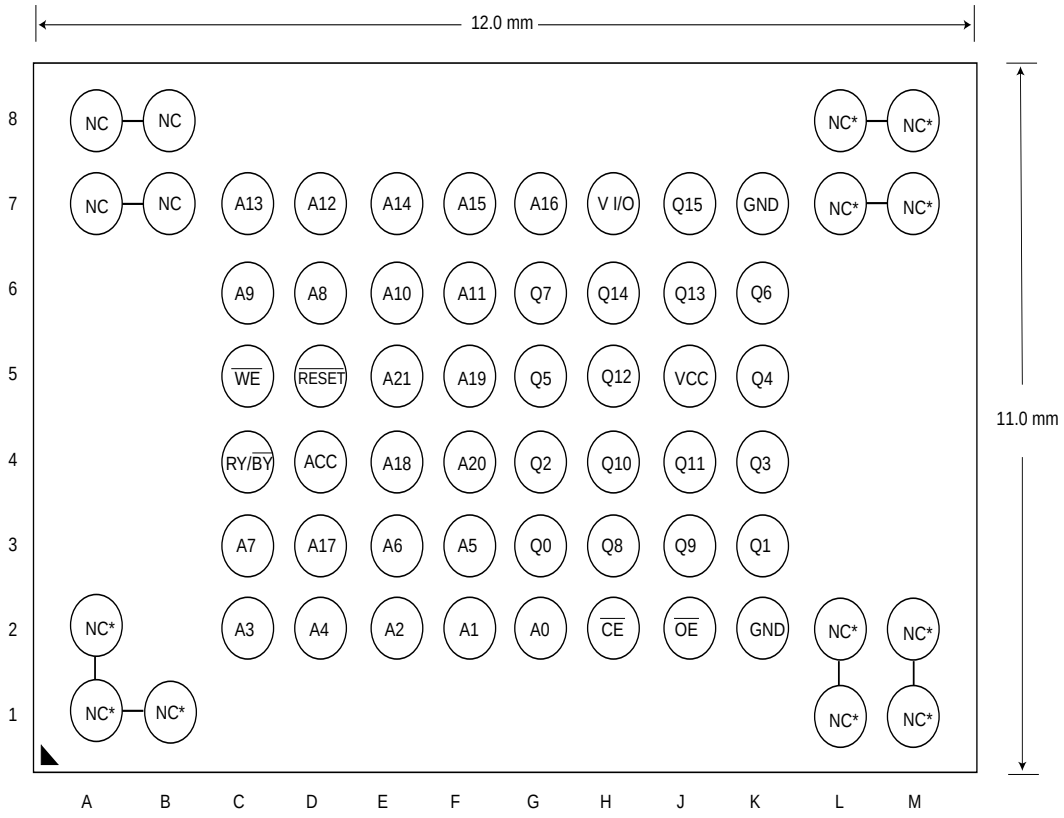

* Ball are shorted together via the substrate but not connected to the die.

PIN DESCRIPTION

SYMBOL	PIN NAME
A0~A21	Address Input
Q0~Q15	8 Data Inputs/Outputs
CE#	Chip Enable Input
WE#	Write Enable Input
OE#	Output Enable Input
RESET#	Hardware Reset Pin, Active Low
WP#	Hardware Write Protect Input
RY/BY#	Read/Busy Output
VCC	+3.0V single power supply
ACC	Hardware Acceleration Pin
GND	Device Ground
NC	Pin Not Connected Internally
V I/O	Input/Output buffer (2.7V~3.6V) this input should be tied directly to VCC

LOGIC SYMBOL

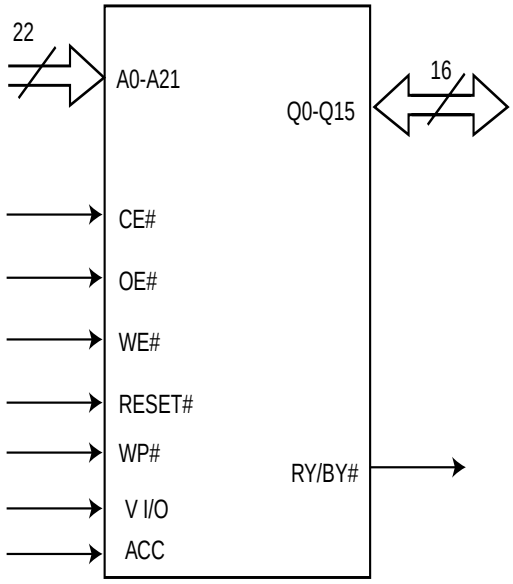

BLOCK DIAGRAM

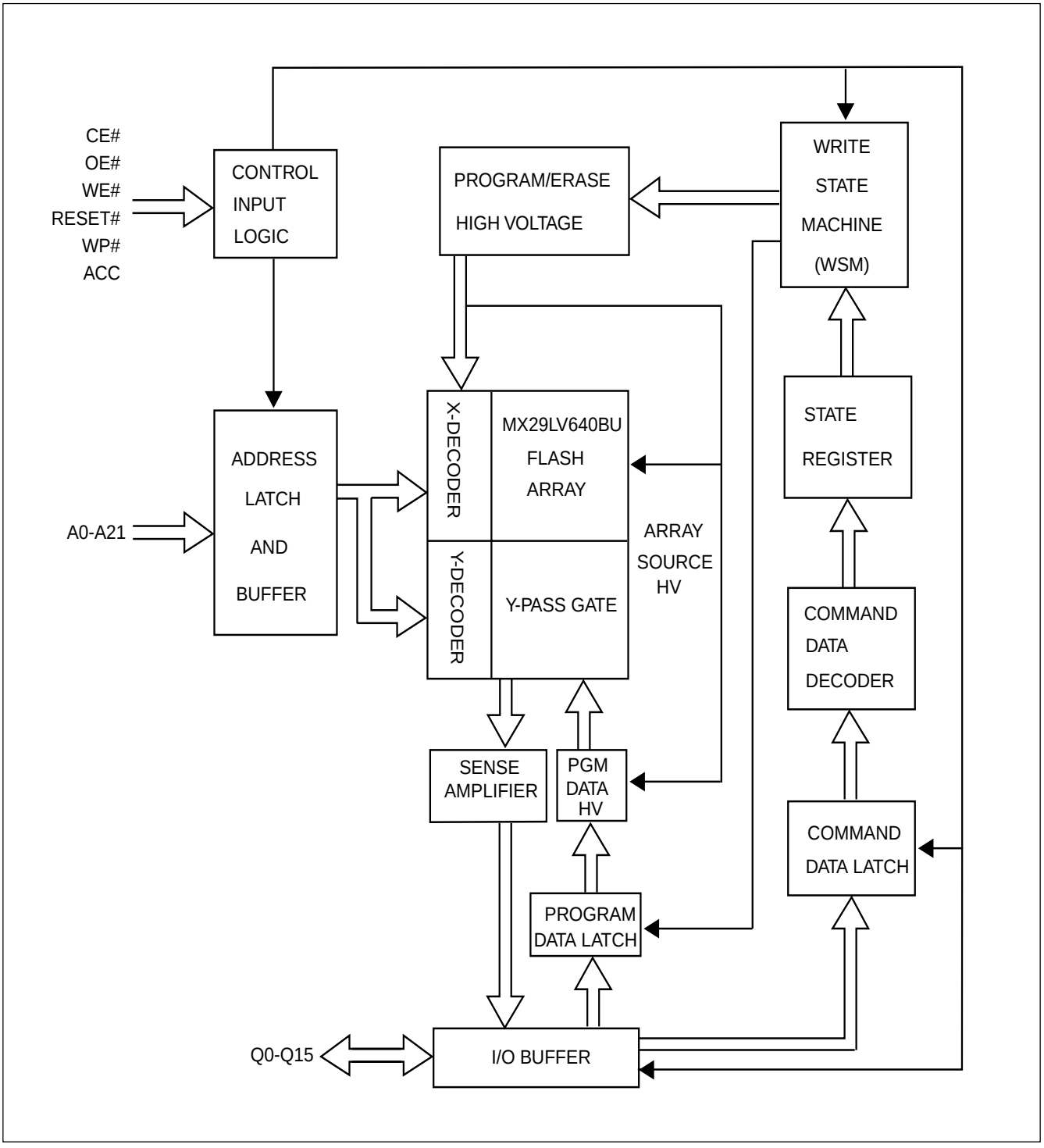

SECTOR (GROUP) STRUCTURE

Sector	A21	A20	A19	A18	A17	A16	A15	16-bit Address Range (in hexadecimal)
SA0	0	0	0	0	0	0	0	000000-007FFF
SA1	0	0	0	0	0	0	1	008000-00FFFF
SA2	0	0	0	0	0	1	0	010000-017FFF
SA3	0	0	0	0	0	1	1	018000-01FFFF
SA4	0	0	0	0	1	0	0	020000-027FFF
SA5	0	0	0	0	1	0	1	028000-02FFFF
SA6	0	0	0	0	1	1	0	030000-037FFF
SA7	0	0	0	0	1	1	1	038000-03FFFF
SA8	0	0	0	1	0	0	0	040000-047FFF
SA9	0	0	0	1	0	0	1	048000-04FFFF
SA10	0	0	0	1	0	1	0	050000-057FFF
SA11	0	0	0	1	0	1	1	058000-05FFFF
SA12	0	0	0	1	1	0	0	060000-067FFF
SA13	0	0	0	1	1	0	1	068000-06FFFF
SA14	0	0	0	1	1	1	0	070000-077FFF
SA15	0	0	0	1	1	1	1	078000-07FFFF
SA16	0	0	1	0	0	0	0	080000-087FFF
SA17	0	0	1	0	0	0	1	088000-08FFFF
SA18	0	0	1	0	0	1	0	090000-097FFF
SA19	0	0	1	0	0	1	1	098000-09FFFF
SA20	0	0	1	0	1	0	0	0A0000-0A7FFF
SA21	0	0	1	0	1	0	1	0A8000-0AFFFF
SA22	0	0	1	0	1	1	0	0B0000-0B7FFF
SA23	0	0	1	0	1	1	1	0B8000-0BFFFF
SA24	0	0	1	1	0	0	0	0C0000-0C7FFF
SA25	0	0	1	1	0	0	1	0C8000-0CFFFF
SA26	0	0	1	1	0	1	0	0D0000-0D7FFF
SA27	0	0	1	1	0	1	1	0D8000-0DFFFF
SA28	0	0	1	1	1	0	0	0E0000-0E7FFF
SA29	0	0	1	1	1	0	1	0E8000-0EFFFF
SA30	0	0	1	1	1	1	0	0F0000-0F7FFF
SA31	0	0	1	1	1	1	1	0F8000-0FFFFF
SA32	0	1	0	0	0	0	0	100000-10FFFF
SA33	0	1	0	0	0	0	1	108000-10FFFF
SA34	0	1	0	0	0	1	0	110000-117FFF
SA35	0	1	0	0	0	1	1	118000-11FFFF
SA36	0	1	0	0	1	0	0	120000-127FFF
SA37	0	1	0	0	1	0	1	128000-12FFFF

Sector	A21	A20	A19	A18	A17	A16	A15	16-bit Address Range (in hexadecimal)
SA38	0	1	0	0	1	1	0	130000-137FFF
SA39	0	1	0	0	1	1	1	138000-13FFFF
SA40	0	1	0	1	0	0	0	140000-147FFF
SA41	0	1	0	1	0	0	1	148000-14FFFF
SA42	0	1	0	1	0	1	0	150000-157FFF
SA43	0	1	0	1	0	1	1	158000-15FFFF
SA44	0	1	0	1	1	0	0	160000-167FFF
SA45	0	1	0	1	1	0	1	168000-16FFFF
SA46	0	1	0	1	1	1	0	170000-177FFF
SA47	0	1	0	1	1	1	1	178000-17FFFF
SA48	0	1	1	0	0	0	0	180000-187FFF
SA49	0	1	1	0	0	0	1	188000-18FFFF
SA50	0	1	1	0	0	1	0	190000-197FFF
SA51	0	1	1	0	0	1	1	198000-19FFFF
SA52	0	1	1	0	1	0	0	1A0000-1A7FFF
SA53	0	1	1	0	1	0	1	1A8000-1AFFFF
SA54	0	1	1	0	1	1	0	1B0000-1B7FFF
SA55	0	1	1	0	1	1	1	1B8000-1BFFFF
SA56	0	1	1	1	0	0	0	1C0000-1C7FFF
SA57	0	1	1	1	0	0	1	1C8000-1CFFFF
SA58	0	1	1	1	0	1	0	1D0000-1D7FFF
SA59	0	1	1	1	0	1	1	1D8000-1DFFFF
SA60	0	1	1	1	1	0	0	1E0000-1E7FFF
SA61	0	1	1	1	1	0	1	1E8000-1EFFFF
SA62	0	1	1	1	1	1	0	1F0000-1F7FFF
SA63	0	1	1	1	1	1	1	1F8000-1FFFFF
SA64	1	0	0	0	0	0	0	200000-207FFF
SA65	1	0	0	0	0	0	1	208000-20FFFF
SA66	1	0	0	0	0	1	0	210000-217FFF
SA67	1	0	0	0	0	1	1	218000-21FFFF
SA68	1	0	0	0	1	0	0	220000-227FFF
SA69	1	0	0	0	1	0	1	228000-22FFFF
SA70	1	0	0	0	1	1	0	230000-237FFF
SA71	1	0	0	0	1	1	1	238000-23FFFF
SA72	1	0	0	1	0	0	0	240000-247FFF
SA73	1	0	0	1	0	0	1	248000-24FFFF
SA74	1	0	0	1	0	1	0	250000-257FFF
SA75	1	0	0	1	0	1	1	258000-25FFFF
SA76	1	0	0	1	1	0	0	260000-267FFF
SA77	1	0	0	1	1	0	1	268000-26FFFF

Sector	A21	A20	A19	A18	A17	A16	A15	16-bit Address Range (in hexadecimal)
SA78	1	0	0	1	1	1	0	270000-277FFF
SA79	1	0	0	1	1	1	1	278000-27FFFF
SA80	1	0	1	0	0	0	0	280000-287FFF
SA81	1	0	1	0	0	0	1	288000-28FFFF
SA82	1	0	1	0	0	1	0	290000-297FFF
SA83	1	0	1	0	0	1	1	298000-29FFFF
SA84	1	0	1	0	1	0	0	2A0000-2A7FFF
SA85	1	0	1	0	1	0	1	2A8000-2AFFFF
SA86	1	0	1	0	1	1	0	2B0000-2B7FFF
SA87	1	0	1	0	1	1	1	2B8000-2BFFFF
SA88	1	0	1	1	0	0	0	2C0000-2C7FFF
SA89	1	0	1	1	0	0	1	2C8000-2CFFFF
SA90	1	0	1	1	0	1	0	2D0000-2D7FFF
SA91	1	0	1	1	0	1	1	2D8000-2DFFFF
SA92	1	0	1	1	1	0	0	2E0000-2E7FFF
SA93	1	0	1	1	1	0	1	2E8000-2EFFFF
SA94	1	0	1	1	1	1	0	2F0000-2F7FFF
SA95	1	0	1	1	1	1	1	2F8000-2FFFFF
SA96	1	1	0	0	0	0	0	300000-307FFF
SA97	1	1	0	0	0	0	1	308000-30FFFF
SA98	1	1	0	0	0	1	0	310000-317FFF
SA99	1	1	0	0	0	1	1	318000-31FFFF
SA100	1	1	0	0	1	0	0	320000-327FFF
SA101	1	1	0	0	1	0	1	328000-32FFFF
SA102	1	1	0	0	1	1	0	330000-337FFF
SA103	1	1	0	0	1	1	1	338000-33FFFF
SA104	1	1	0	1	0	0	0	340000-347FFF
SA105	1	1	0	1	0	0	1	348000-34FFFF
SA106	1	1	0	1	0	1	0	350000-357FFF
SA107	1	1	0	1	0	1	1	358000-35FFFF
SA108	1	1	0	1	1	0	0	360000-367FFF
SA109	1	1	0	1	1	0	1	368000-36FFFF
SA110	1	1	0	1	1	1	0	370000-377FFF
SA111	1	1	0	1	1	1	1	378000-37FFFF
SA112	1	1	1	0	0	0	0	380000-387FFF
SA113	1	1	1	0	0	0	1	388000-38FFFF
SA114	1	1	1	0	0	1	0	390000-397FFF
SA115	1	1	1	0	0	1	1	398000-39FFFF
SA116	1	1	1	0	1	0	0	3A0000-3A7FFF
SA117	1	1	1	0	1	0	1	3A8000-3AFFFF

Sector	A21	A20	A19	A18	A17	A16	A15	16-bit Address Range (in hexadecimal)
SA118	1	1	1	0	1	1	0	3B0000-3B7FFF
SA119	1	1	1	0	1	1	1	3B8000-3BFFFF
SA120	1	1	1	1	0	0	0	3C0000-3C7FFF
SA121	1	1	1	1	0	0	1	3C8000-3CFFFF
SA122	1	1	1	1	0	1	0	3D0000-3D7FFF
SA123	1	1	1	1	0	1	1	3D8000-3DFFFF
SA124	1	1	1	1	1	0	0	3E0000-3E7FFF
SA125	1	1	1	1	1	0	1	3E8000-3EFFFF
SA126	1	1	1	1	1	1	0	3F0000-3F7FFF
SA127	1	1	1	1	1	1	1	3F8000-3FFFFF

Sector Group Protection/Unprotected Address Table

Sector Group	A21-A17
SA0-SA3	00000
SA4-SA7	00001
SA8-SA11	00010
SA12-SA15	00011
SA16-SA19	00100
SA20-SA23	00101
SA24-SA27	00110
SA28-SA31	00111
SA32-SA35	01000
SA36-SA39	01001
SA40-SA43	01010
SA44-SA47	01011
SA48-SA51	01100
SA52-SA55	01101
SA56-SA59	01110
SA60-SA63	01111
SA64-SA65	10000
SA66-SA69	10001
SA70-SA73	10010
SA74-SA79	10011
SA80-SA83	10100
SA84-SA87	10101
SA88-SA91	10110
SA92-SA95	10111
SA96-SA99	11000
SA100-SA103	11001
SA104-SA107	11010
SA108-SA111	11011
SA112-SA115	11100
SA116-SA119	11101
SA120-SA123	11110
SA124-SA127	11111

Note: All sector groups are 128K words in size.

Table 1. BUS OPERATION (1)

Operation	CE#	OE#	WE#	RESET#	WP#	ACC	Address (Note 2)	Q15~Q0
Read	L	L	H	H	X	X	A_{IN}	D_{OUT}
Write (Program/Erase)	L	H	L	H	(Note 2)	X	A_{IN}	(Note 3)
Accelerated Program	L	H	L	H	(Note 2)	V_{HH}	A_{IN}	(Note 3)
Standby	VCC± 0.3V	X	X	VCC± 0.3V	X	H	X	High-Z
Output Disable	L	H	H	H	X	X	X	High-Z
Reset	X	X	X	L	X	X	X	High-Z
Sector Group Protect (Note 1)	L	H	L	V_{ID}	H	X	Sector Addresses, A6=L, A1=H, A0=L	(Note 3)
Chip Unprotect (Note 1)	L	H	L	V_{ID}	H	X	Sector Addresses, A6=H, A1=H, A0=L	(Note 3)
Temporary Sector Group Unprotect	X	X	X	V_{ID}	H	X	A_{IN}	(Note 3)

Legend:
L=Logic LOW=V_{IL},H=Logic High=V_{IH},V_{ID}=12.0±0.5V, X=Don't Care, A_{IN}=Address IN, D_{IN}=Data IN, D_{OUT}=Data OUT

Notes:
1. The sector group protect and chip unprotect functions may also be implemented via programming equipment. See the "Sector Group Protection and Chip Unprotect" section.
2. If WP#=VIL, the first sector remains protected. If WP#=VIH, the first sector will be protected or unprotected as determined by the method described in "Sector Group Protection and Unprotect". All sectors are unprotected when shipped from the factory (The Secured Silicon Sector may be factory protected depending on version ordered).
3. D_{IN} or D_{OUT} as required by command sequence, Data# polling or sector protect algorithm (see Figure 14).

Table 2. AUTOMATIC SELECT CODES (High Voltage Method)

Operation		CE#	OE#	WE#	A0	A1	A5 to A2	A6	A8 to A7	A9	A14 to A10	A15 to A21	Q0~Q15
Read Silicon ID	Manufactures Code	L	L	H	L	L	X	L	X	V_{ID}	X	X	C2H
	Device Code	L	L	H	H	L	X	L	X	V_{ID}	X	X	22D7H
Sector Protect Verify		L	L	H	L	H	X	L	X	V_{ID}	X	SA	Code(1)
Secured Silicon Sector Indicator Bit(Q7) with WP# Protects highest Address Sector		L	L	H	H	H	X	L	X	V_{ID}	X	X	xx98h (factory locked) xx18h (non-factory locked)
Secured Silicon Sector Indicator Bit(Q7) with WP# Protects lowest Address Sector		L	L	H	H	H	X	L	X	V_{ID}	X	X	xx88h (factory locked) xx08h (non-factory locked)

Notes:
1.code=xx00h means unprotected, or code=xx01h means protected, SA=Sector Address, X=Don't care.

REQUIREMENTS FOR READING ARRAY DATA

To read array data from the outputs, the system must drive the CE# and OE# pins to VIL. CE# is the power control and selects the device. OE# is the output control and gates array data to the output pins. WE# should remain at VIH.

The internal state machine is set for reading array data upon device power-up, or after a hardware reset. This ensures that no spurious alteration of the memory content occurs during the power transition. No command is necessary in this mode to obtain array data. Standard microprocessor read cycles that assert valid address on the device address inputs produce valid data on the device data outputs. The device remains enabled for read access until the command register contents are altered.

WRITE COMMANDS/COMMAND SEQUENCES

To program data to the device or erase sectors of memory , the system must drive WE# and CE# to VIL, and OE# to VIH.

An erase operation can erase one sector, multiple sectors , or the entire device. Table indicates the address space that each sector occupies. A "sector address" consists of the address bits required to uniquely select a sector. The "Writing specific address and data commands or sequences into the command register initiates device operations. Table 1 defines the valid register command sequences. Writing incorrect address and data values or writing them in the improper sequence resets the device to reading array data". Section has details on erasing a sector or the entire chip, or suspending/resuming the erase operation.

After the system writes the Automatic Select command sequence, the device enters the Automatic Select mode. The system can then read Automatic Select codes from the internal register (which is separate from the memory array) on Q7-Q0. Standard read cycle timings apply in this mode. Refer to the Automatic Select Mode and Automatic Select Command Sequence section for more information.

ICC2 in the DC Characteristics table represents the active current specification for the write mode. The "AC Characteristics" section contains timing specification table and timing diagrams for write operations.

ACCELERATED PROGRAM OPERATION

The device offers accelerated program operations through the ACC function. This is one of two functions provided by the ACC pin. This function is primarily intended to allow faster manufacturing throughput at the factory.

If the system asserts VHH on this pin, the device automatically enters the aforementioned accelerated program mode, temporarily unprotects any protected sectors, and uses the higher voltage on the pin to reduce the time required for program operations. Removing VHH from the ACC pin must not be at VHH for operations other than accelerated programming, or device damage may result.

STANDBY MODE

MX29LV640BU can be set into Standby mode with two different approaches. One is using both CE# and RESET# pins and the other one is using RESET# pin only.

When using both pins of CE# and RESET#, a CMOS Standby mode is achieved with both pins held at Vcc ± 0.3V. Under this condition, the current consumed is less than 0.2uA (typ.). If both of the CE# and RESET# are held at VIH, but not within the range of VCC ± 0.3V, the device will still be in the standby mode, but the standby current will be larger. During Auto Algorithm operation, Vcc active current (Icc2) is required even CE# = "H" until the operation is completed. The device can be read with standard access time (tCE) from either of these standby modes.

When using only RESET#, a CMOS standby mode is achieved with RESET# input held at Vss ± 0.3V, Under this condition the current is consumed less than 1uA (typ.). Once the RESET# pin is taken high, the device is back to active without recovery delay.

In the standby mode the outputs are in the high impedance state, independent of the OE# input.

MX29LV640BU is capable to provide the Automatic Standby Mode to restrain power consumption during readout of data. This mode can be used effectively with an application requested low power consumption such as handy terminals.

To active this mode, MX29LV640BU automatically switch themselves to low power mode when MX29LV640BU addresses remain stable during access time of tACC+30ns.

It is not necessary to control CE#, WE#, and OE# on the mode. Under the mode, the current consumed is typically 0.2uA (CMOS level).

AUTOMATIC SLEEP MODE

The automatic sleep mode minimizes Flash device energy consumption. The device automatically enables this mode when address remain stable for tACC+30ns. The automatic sleep mode is independent of the CE#, WE#, and OE# control signals. Standard address access timings provide new data when addresses are changed. While in sleep mode, output data is latched and always available to the system. ICC4 in the DC Characteristics table represents the automatic sleep mode current specification.

OUTPUT DISABLE

With the OE# input at a logic high level (VIH), output from the devices are disabled. This will cause the output pins to be in a high impedance state.

RESET# OPERATION

The RESET# pin provides a hardware method of resetting the device to reading array data. When the RESET# pin is driven low for at least a period of tRP, the device immediately terminates any operation in progress, tristates all output pins, and ignores all read/write commands for the duration of the RESET# pulse. The device also resets the internal state machine to reading array data. The operation that was interrupted should be reinitiated once the device is ready to accept another command sequence, to ensure data integrity

Current is reduced for the duration of the RESET# pulse. When RESET# is held at VSS±0.3V, the device draws CMOS standby current (ICC4). If RESET# is held at VIL but not within VSS±0.3V, the standby current will be greater.

The RESET# pin may be tied to system reset circuitry. A system reset would that also reset the Flash memory, enabling the system to read the boot-up firmware from the Flash memory.

If RESET# is asserted during a program or erase operation, the RY/BY# pin remains a "0" (busy) until the internal reset operation is complete, which requires a time of tREADY. The system can thus monitor RY/BY# to determine whether the reset operation is complete. If RESET# is asserted when a program or erase operation is completed within a time of tREADY. The system can read data tRH after the RESET# pin returns to VIH.

Refer to the AC Characteristics tables for RESET# parameters and to Figure 3 for the timing diagram.

SECTOR GROUP PROTECT OPERATION

The MX29LV640BU features hardware sector group protection. This feature will disable both program and erase operations for these sector group protected. In this device, a sector group consists of four adjacent sectors which are protected or unprotected at the same time. To activate this mode, the programming equipment must force VID on address pin A9 and control pin OE#, (suggest VID = 12V) A6 = VIL and CE# = VIL. (see Table 2) Programming of the protection circuitry begins on the falling edge of the WE# pulse and is terminated on the rising edge. Please refer to sector group protect algorithm and waveform.

MX29LV640BU also provides another method. Which requires VID on the RESET# only. This method can be implemented either in-system or via programming equipment. This method uses standard microprocessor bus cycle timing.

To verify programming of the protection circuitry, the programming equipment must force VID on address pin A9 (with CE# and OE# at VIL and WE# at VIH). When A1=1, it will produce a logical "1" code at device output Q0 for a protected sector. Otherwise the device will produce 00H for the unprotected sector. In this mode, the addresses, except for A1, are don't care. Address locations with A1 = VIL are reserved to read manufacturer and device codes. (Read Silicon ID)

It is also possible to determine if the group is protected in the system by writing a Read Silicon ID command. Performing a read operation with A1=VIH, it will produce a logical "1" at Q0 for the protected sector.

CHIP UNPROTECT OPERATION

The MX29LV640BU also features the chip unprotected mode, so that all sectors are unprotected after chip

unprotected is completed to incorporate any changes in the code. It is recommended to protect all sectors before activating chip unprotect mode.

To activate this mode, the programming equipment must force VID on control pin OE# and address pin A9. The CE# pins must be set at VIL. Pins A6 must be set to VIH. (see Table 2) Refer to chip unprotected algorithm and waveform for the chip unprotected algorithm. The unprotected mechanism begins on the falling edge of the WE# pulse and is terminated on the rising edge.

MX29LV640BU also provides another method. Which requires VID on the RESET# only. This method can be implemented either in-system or via programming equipment. This method uses standard microprocessor bus cycle timing.

It is also possible to determine if the chip is unprotected in the system by writing the Read Silicon ID command. Performing a read operation with A1=VIH, it will produce 00H at data outputs (Q0-Q15) for an unprotected sector. It is noted that all sectors are unprotected after the chip unprotected algorithm is completed.

WRITE PROTECT (WP#)

This Write Protect function provides a hardware protection method on the first sector without using VID.

If the system asserts VIL on the WP# pin, the device disable program and erase function in the first sector independently of whether those sectors were protected or unprotect using the method described in "Sector Group Protection and Unprotect".

If the system asserts VIH on the WP# pin, the device reverts to whether the first sector was previously set to be protected or unprotected using the method described in "Sector Group Protection and Unprotect".

TEMPORARY SECTOR GROUP UNPROTECT OPERATION

This feature allows temporary unprotect of previously protected sector to change data in-system. The Temporary Sector Unprotect mode is activated by setting the RESET# pin to VID(11.5V-12.5V). During this mode, formerly protected sectors can be programmed or erased as unprotected sector. Once VID is remove from the RESET# pin, all the previously protected sectors are protected again.

SILICON ID READ OPERATION

Flash memories are intended for use in applications where the local CPU alters memory contents. As such, manufacturer and device codes must be accessible while the device resides in the target system. PROM programmers typically access signature codes by raising A9 to a high voltage. However, multiplexing high voltage onto address lines is not generally desired system design practice.

MX29LV640BU provides hardware method to access the silicon ID read operation. Which method requires VID on A9 pin, VIL on CE#, OE#, A6, and A1 pins. Which apply VIL on A0 pin, the device will output MXIC's manufacture code of C2H. Which apply VIH on A0 pin, the device will output MX29LV640BU device code of 22D7H.

VERIFY SECTOR GROUP PROTECT STATUS OPERATION

MX29LV640BU provides hardware method for sector group protect status verify. Which method requires VID on A9 pin, VIH on WE# and A1 pins, VIL on CE#, OE#, A6, and A0 pins, and sector address on A16 to A21 pins. Which the identified sector is protected, the device will output 01H. Which the identified sector is not protect, the device will output 00H.

DATA PROTECTION

The MX29LV640BU is designed to offer protection against accidental erasure or programming caused by spurious system level signals that may exist during power transition. During power up the device automatically resets the state machine in the Read mode. In addition, with its control register architecture, alteration of the memory contents only occurs after successful completion of specific command sequences. The device also incorporates several features to prevent inadvertent write cycles resulting from VCC power-up and power-down transition or system noise.

SECURED SILICON SECTOR

The MX29LV640BU features a OTP region where the system may access through a command sequence to create a permanent part identification as so called Electronic Serial Number (ESN) in the device. Once this region is programmed, any further modification on the region is impossible. The secured silicon sector is a 128 words in length, and uses a Secured Silicon Sector Indicator Bit (Q7) to indicate whether or not the Secured Silicon Sector is locked when shipped from the factory. This bit is permanently set at the factory and cannot be changed, which prevent duplication of a factory locked part. This ensures the security of the ESN once the product is shipped to the field.

The MX29LV640BU offers the device with Secured Silicon Sector either factory locked or customer lockable. The factory-locked version is always protected when shipped from the factory , and has the Secured Silicon Sector Indicator Bit permanently set to a "1". The customer-lockable version is shipped with the Secured Silicon Sector unprotected, allowing customs to utilize that sector in any form they prefer. The customer-lockable version has the secured sector Indicator Bit permanently set to a "0". Therefore, the Secured Silicon Sector Indicator Bit permanently set to a "0". Therefore, the Second Silicon Sector Indicator Bit prevents customer, lockable device from being used to replace devices that are factory locked.

The secured silicon sector address space in this device is allocated as follows.

Secured Silicon Sector Address Range	Standard Factory Locked	Express Flash Factory Locked	Customer Lockable
000000h-000007h	ESN	ESN or Determined by Customer	Determined by Customer
000008h-00007Fh	Unavailable	Determined by Customer	

The system access the Secured Silicon Sector through a command sequence (refer to "Enter Secured Silicon/ Exit Secured Silicon Sector command Sequence). After the system has written the Enter Secured Silicon Sector command sequence, it may read the Secured Silicon Sector by using the address normally occupied by the first sector (SA0). This mode of operation continues until the system issues the Exit Secured Silicon Sector command sequence, or until power is removed from the device. On power-up, or following a hardware reset, the device reverts to sending command to sector SA0.

FACTORY LOCKED:Secured Silicon Sector Programmed and Protected At the Factory

In device with an ESN, the Secured Silicon Sector is protected when the device is shipped from the factory. The Secured Silicon Sector cannot be modified in any way. A factory locked device has an 8-word random ESN at address 000000h-000007h.

CUSTOMER LOCKABLE:Secured Silicon Sector NOT Programmed or Protected At the Factory

As an alternative to the factory-locked version, the device may be ordered such that the customer may program and protect the 128-word Secured Silicon Sector. Programming and protected the Secured Silicon Sector must be used with caution since, once protected, there is no procedure available for unprotecting the Secured Silicon Sector area and none of the bits in the Secured Silicon Sector memory space can be modified in any way.

The Secured Silicon Sector area can be protected using one of the following procedures:

Write the three-cycle Enter Secured Silicon Sector Region command sequence, and then follow the in-system sector protect algorithm as shown in Figure 14, except that RESET# may be at either VIH or VID. This allows in-system protection of the Secured Silicon Sector without raising any device pin to a high voltage. Note that method is only applicable to the Secured Silicon Sector.

Write the three-cycle Enter Secured Silicon Sector Region command sequence, and then alternate method of sector protection described in the :Sector Group Protection and Unprotect" section.

Once the Secured Silicon Sector is programmed, locked and verified, the system must write the Exit Secured Silicon Sector Region command sequence to return to reading and writing the remainder of the array.

LOW VCC WRITE INHIBIT

When VCC is less than VLKO the device does not accept any write cycles. This protects data during VCC power-up and power-down. The command register and all internal program/erase circuits are disabled, and the device resets. Subsequent writes are ignored until VCC is greater than VLKO. The system must provide the proper signals to the control pins to prevent unintentional write when VCC is greater than VLKO.

WRITE PULSE "GLITCH" PROTECTION

Noise pulses of less than 5ns(typical) on CE# or WE# will not initiate a write cycle.

LOGICAL INHIBIT

Writing is inhibited by holding any one of OE# = VIL, CE# = VIH or WE# = VIH. To initiate a write cycle CE# and WE# must be a logical zero while OE# is a logical one.

POWER-UP SEQUENCE

The MX29LV640BU powers up in the Read only mode. In addition, the memory contents may only be altered after successful completion of the predefined command sequences.

POWER-UP WRITE INHIBIT

If WE#=CE#=VIL and OE#=VIH during power up, the device does not accept commands on the rising edge of WE#. The internal state machine is automatically reset to the read mode on power-up.

POWER SUPPLY DE COUPLING

In order to reduce power switching effect, each device should have a 0.1uF ceramic capacitor connected between its VCC and GND.

SOFTWARE COMMAND DEFINITIONS

Device operations are selected by writing specific address and data sequences into the command register. Writing incorrect address and data values or writing them in the improper sequence will reset the device to the read mode. Table 3 defines the valid register command sequences. Note that the Erase Suspend (B0H) and Erase Resume (30H) commands are valid only while the Sector Erase operation is in progress. Either of the two reset command sequences will reset the device (when applicable).

All addresses are latched on the falling edge of WE# or CE#, whichever happens later. All data are latched on rising edge of WE# or CE#, whichever happens first.

TABLE 3. MX29LV640BU COMMAND DEFINITIONS

Command	Bus Cycle	First Bus Cycle		Second Bus Cycle		Third Bus Cycle		Fourth Bus Cycle		Fifth Bus Cycle		Sixth Bus Cycle	
		Addr	Data	Addr	Data	Addr	Data	Addr	Data	Addr	Data	Addr	Data
Read(Note 5)	1	RA	RD										
Reset(Note 6)	1	XXX	F0										
Automatic Select(Note 7)													
Manufacturer ID	4	555	AA	2AA	55	555	90	X00	C2				
Device ID	4	555	AA	2AA	55	555	90	X01	22D7				
Secured Sector Factory Protect (Note 9)	4	555	AA	2AA	55	555	90	X03	see Note10				
Sector Group Protect	4	555	AA	2AA	55	555	90	SA	xx00				
Verify (Note 8)	4	555	AA	2AA	55	555	90	X02	xx01				
Enter Secured Silicon Sector	3	555	AA	2AA	55	555	88						
Exit Secured Silicon Sector	4	555	AA	2AA	55	555	90	xxx	00				
Program	4	555	AA	2AA	55	555	A0	PA	PD				
Chip Erase	6	555	AA	2AA	55	555	80	555	AA	2AA	55	555	10
Sector Erase	6	555	AA	2AA	55	555	80	555	AA	2AA	55	SA	30
Erase Suspend(Note 10)	1	555	B0										
Erase Resume(Note 11)	1	555	30										
CFI Query (Note 12)		55	98										

Legend:
X=Don't care
RA=Address of the memory location to be read.
RD=Data read from location RA during read operation.
PA=Address of the memory location to be programmed. Addresses are latched on the falling edge of the WE# or CE# pulse.
PD=Data to be programmed at location PA. Data is latched on the rising edge of WE# or CE# pulse.
SA=Address of the sector to be erased or verified. Address bits A21-A16 uniquely select any sector.

Notes:
1. See Table 1 for descriptions of bus operations.
2. All values are in hexadecimal.
3. Except when reading array or Automatic Select data, all bus cycles are write operation.
4. Address bits are don't care for unlock and command cycles, except when PA or SA is required.
5. No unlock or command cycles required when device is in read mode.
6. The Reset command is required to return to the read mode when the device is in the Automatic Select mode or if Q5 goes high.
7. The fourth cycle of the Automatic Select command sequence is a read cycle.
8. The data is 00h for an unprotected sector/sector block and 01h for a protected sector/sector block. In the third cycle of the command sequence, address bit A21=0 to verify sectors 0~63, A21=1 to verify sectors 64.
9. If WP# protects the highest address sectors, the data is 98h for factory locked and 18h for factory. If WP# protects the lowest address sector, the data is 88h for factory locked and 08h for not factory locked.
10. The system may read and program functions in non-erasing sectors, or enter the Automatic Select mode, when in the erase Suspend mode. The Erase Suspend command is valid only during a sector erase operation.
11. The Erase Resume command is valid only during the Erase Suspend mode.
12. Command is valid when device is ready to read array data or when device is in Automatic Select mode.

READING ARRAY DATA

The device is automatically set to reading array data after device power-up. No commands are required to retrieve data. The device is also ready to read array data after completing an Automatic Program or Automatic Erase algorithm.

After the device accepts an Erase Suspend command, the device enters the Erase Suspend mode. The system can read array data using the standard read timings, except that if it reads at an address within erase-suspended sectors, the device outputs status data. After completing a programming operation in the Erase Suspend mode, the system may once again read array data with the same exception. See "Erase Suspend/Erase Resume Commands" for more information on this mode. The system must issue the reset command to re-enable the device for reading array data if Q5 goes high, or while in the Automatic Select mode. See the "Reset Command" section, next.

RESET COMMAND

Writing the reset command to the device resets the device to reading array data. Address bits are don't care for this command.

The reset command may be written between the sequence cycles in an erase command sequence before erasing begins. This resets the device to reading array data. Once erasure begins, however, the device ignores reset commands until the operation is complete.

The reset command may be written between the sequence cycles in a program command sequence before programming begins. This resets the device to reading array data (also applies to programming in Erase Suspend mode). Once programming begins, however, the device ignores reset commands until the operation is complete.

The reset command may be written between the sequence cycles in an SILICON ID READ command sequence. Once in the SILICON ID READ mode, the reset command must be written to return to reading array data (also applies to SILICON ID READ during Erase Suspend).

If Q5 goes high during a program or erase operation, writing the reset command returns the device to reading array data (also applies during Erase Suspend).

SILICON ID READ COMMAND SEQUENCE

The SILICON ID READ command sequence allows the host system to access the manufacturer and devices codes, and determine whether or not a sector is protected. Table 3 shows the address and data requirements.

This method is an alternative to that shown in Table 1, which is intended for PROM programmers and requires V_{ID} on address bit A9.

The SILICON ID READ command sequence is initiated by writing two unlock cycles, followed by the SILICON ID READ command. The device then enters the SILICON ID READ mode, and the system may read at any address any number of times, without initiating another command sequence. A read cycle at address XX00h retrieves the manufacturer code. A read cycle at address XX01h returns the device code. A read cycle containing a sector address (SA) and the address 02h returns 01h if that sector is protected, or 00h if it is unprotected. Refer to Table for valid sector addresses.

The system must write the reset command to exit the Automatic Select mode and return to reading array data.

WORD PROGRAM COMMAND SEQUENCE

The command sequence requires four bus cycles, and is initiated by writing two unlock write cycles, followed by the program set-up command. The program address and data are written next, which in turn initiate the Embedded Program algorithm. The system is not required to provide further controls or timings. The device automatically generates the program pulses and verifies the programmed cell margin. Table 3 shows the address and data requirements for the word program command sequence.

When the Embedded Program algorithm is complete, the device then returns to reading array data and addresses are no longer latched. The system can determine the status of the program operation by using Q7, Q6, or RY/BY#. See "Write Operation Status" for information on these status bits.

Any commands written to the device during the Embedded Program Algorithm are ignored. Note that a hardware reset immediately terminates the programming operation. The Word Program command sequence should be reinitiated once the device has reset to reading array data, to ensure data integrity.

Programming is allowed in any sequence and across sector boundaries. A bit cannot be programmed from a "0" back to a "1". Attempting to do so may halt the operation and set Q5 to "1" ," or cause the Data# Polling algorithm to indicate the operation was successful. However, a succeeding read will show that the data is still "0". Only erase operations can convert a "0" to a "1".

SETUP AUTOMATIC CHIP/SECTOR ERASE

Chip erase is a six-bus cycle operation. There are two "unlock" write cycles. These are followed by writing the "set-up" command 80H. Two more "unlock" write cycles are then followed by the chip erase command 10H, or the sector erase command 30H.

The MX29LV640BU contains a Silicon-ID-Read operation to supplement traditional PROM programming methodology. The operation is initiated by writing the read silicon ID command sequence into the command register. Following the command write, a read cycle with A1=VIL,A0=VIL retrieves the manufacturer code of C2H. A read cycle with A1=VIL, A0=VIH returns the device code of 22D7H for MX29LV640BU.

AUTOMATIC CHIP/SECTOR ERASE COMMAND

The device does not require the system to preprogram prior to erase. The Automatic Erase algorithm automatically pre-program and verifies the entire memory for an all zero data pattern prior to electrical erase. The system is not required to provide any controls or timings during these operations. Table 3 shows the address and data requirements for the chip erase command sequence.

Any commands written to the chip during the Automatic Erase algorithm are ignored. Note that a hardware reset during the chip erase operation immediately terminates the operation. The Chip Erase command sequence should be reinitiated once the device has returned to reading array data, to ensure data integrity.

The system can determine the status of the erase operation by using Q7, Q6, Q2, or RY/BY#. See "Write Operation Status" for information on these status bits. When the Automatic Erase algorithm is complete, the device returns to reading array data and addresses are no longer latched.

Figure 5 illustrates the algorithm for the erase operation. See the Erase/Program Operations tables in "AC Characteristics" for parameters, and to Figure 4 for timing diagrams.

SECTOR ERASE COMMANDS

The Automatic Sector Erase does not require the device to be entirely pre-programmed prior to executing the Automatic Set-up Sector Erase command and Automatic Sector Erase command. Upon executing the Automatic Sector Erase command, the device will automatically program and verify the sector(s) memory for an all-zero data pattern. The system is not required to provide any control or timing during these operations.

When the sector(s) is automatically verified to contain an all-zero pattern, a self-timed sector erase and verify begin. The erase and verify operations are complete when the data on Q7 is "1" and the data on Q6 stops toggling for two consecutive read cycles, at which time the device returns to the Read mode. The system is not required to provide any control or timing during these operations.

When using the Automatic Sector Erase algorithm, note that the erase automatically terminates when adequate erase margin has been achieved for the memory array (no erase verification command is required). Sector erase is a six-bus cycle operation. There are two "unlock" write cycles. These are followed by writing the set-up command 80H. Two more "unlock" write cycles are then followed by the sector erase command 30H. The sector address is latched on the falling edge of WE# or CE#, whichever happens later , while the command (data) is latched on the rising edge of WE# or CE#, whichever happens first. Sector addresses selected are loaded into internal register on the sixth falling edge of WE# or CE#, whichever happens later. Each successive sector load cycle started by the falling edge of WE# or CE#, whichever happens later must begin within 50us from the rising edge of the preceding WE# or CE#, whichever happens first. Otherwise, the loading period ends and internal auto sector erase cycle starts. (Monitor Q3 to determine if the sector erase timer window is still open, see section Q3, Sector Erase Timer.) Any command other than Sector Erase (30H) or Erase Suspend (B0H) during the time-out period resets the device to read mode.

ERASE SUSPEND

This command only has meaning while the state machine is executing Automatic Sector Erase operation, and therefore will only be responded during Automatic Sector Erase operation. When the Erase Suspend command is issued during the sector erase operation, the device requires a maximum 20us to suspend the sector erase operation. However, When the Erase Suspend command is written during the sector erase time-out, the device immediately terminates the time-out period and suspends the erase operation. After this command has been executed, the command register will initiate erase suspend mode. The state machine will return to read mode automatically after suspend is ready. At this time, state machine only allows the command register to respond to the Erase Resume, program data to, or read data from any sector not selected for erasure.

The system can determine the status of the program operation using the Q7 or Q6 status bits, just as in the standard program operation. After an erase-suspend program operation is complete, the system can once again read array data within non-suspended blocks.

ERASE RESUME

This command will cause the command register to clear the suspend state and return back to Sector Erase mode but only if an Erase Suspend command was previously issued. Erase Resume will not have any effect in all other conditions. Another Erase Suspend command can be written after the chip has resumed erasing.

QUERY COMMAND AND COMMON FLASH INTERFACE (CFI) MODE

MX29LV640BU is capable of operating in the CFI mode. This mode all the host system to determine the manufacturer of the device such as operating parameters and configuration. Two commands are required in CFI mode. Query command of CFI mode is placed first, then the Reset command exits CFI mode. These are described in Table 3.

The single cycle Query command is valid only when the device is in the Read mode, including Erase Suspend, Standby mode, and Read ID mode; however, it is ignored otherwise.

The Reset command exits from the CFI mode to the Read mode, or Erase Suspend mode, or read ID mode. The command is valid only when the device is in the CFI mode.

Table 4-1. CFI mode: Identification Data Values
(All values in these tables are in hexadecimal)

Description	Address h	Data h
Query-unique ASCII string "QRY"	10	0051
	11	0052
	12	0059
Primary vendor command set and control interface ID code	13	0002
	14	0000
Address for primary algorithm extended query table	15	0040
	16	0000
Alternate vendor command set and control interface ID code (none)	17	0000
	18	0000
Address for secondary algorithm extended query table (none)	19	0000
	1A	0000

Table 4-2. CFI Mode: System Interface Data Values

Description	Address h	Data h
VCC supply, minimum (2.7V)	1B	0027
VCC supply, maximum (3.6V)	1C	0036
VPP supply, minimum (none)	1D	0000
VPP supply, maximum (none)	1E	0000
Typical timeout for single word/byte write (2^N us)	1F	0004
Typical timeout for maximum size buffer write (2^N us)	20	0000
Typical timeout for individual block erase (2^N ms)	21	000A
Typical timeout for full chip erase (2^N ms)	22	0000
Maximum timeout for single word/byte write times (2^N X Typ)	23	0005
Maximum timeout for maximum size buffer write times (2^N X Typ)	24	0000
Maximum timeout for individual block erase times (2^N X Typ)	25	0004
Maximum timeout for full chip erase times (not supported)	26	0000

Table 4-3. CFI Mode: Device Geometry Data Values

Description	Address h	Data h
Device size (2^n bytes)	27	0017
Flash device interface code (02=asynchronous x8/x16)	28	0001
	29	0000
Maximum number of bytes in multi-byte write (not supported)	2A	0000
	2B	0000
Number of erase block regions	2C	0001
Erase block region 1 information	2D	007F
[2E,2D] = # of blocks in region -1	2E	0000
[30, 2F] = size in multiples of 256-bytes	2F	0000
	30	0001
Erase Block Region 2 Information (refer to CFI publication 100)	31h	0000h
	32h	0000h
	33h	0000h
	34h	0000h
Erase Block Region 3 Information (refer to CFI publication 100)	35h	0000h
	36h	0000h
	37h	0000h
	38h	0000h
Erase Block Region 4 Information (refer to CFI publication 100)	39h	0000h
	3Ah	0000h
	3Bh	0000h
	3Ch	0000h

Table 4-4. CFI Mode: Primary Vendor-Specific Extended Query Data Values

Description	Address h	Data h
Query-unique ASCII string "PRI"	40	0050
	41	0052
	42	0049
Major version number, ASCII	43	0031
Minor version number, ASCII	44	0033
Address sensitive unlock (0=required, 1= not required)	45	0000
Erase suspend (2= to read and write)	46	0002
Sector protect (N= # of sectors/group)	47	0004
Temporary sector unprotected (1=supported)	48	0001
Sector protect/unprotected scheme (04=29LV800 mode)	49	0004
Simultaneous R/W operation (0=not supported)	4A	0000
Burst mode type (0=not supported)	4B	0000
Page mode type (0=not supported)	4C	0000
ACC (Acceleration) Supply Minimum 00h=Not Supported, D7-D4: Volt, D3-D0:100mV	4Dh	00B5
ACC (Acceleration) Supply Maximum 00h=Not Supported, D7-D4: Volt, D3-D0:100mV	4Eh	00C5
Top/Bottom Boot Sector Flag 02h=Bottom Boot Device, 03h=Top BootnDevice	4Fh	0000h

WRITE OPERATION STATUS

The device provides several bits to determine the status of a write operation: Q2, Q3, Q5, Q6, Q7, and RY/BY#. Table 5 and the following subsections describe the functions of these bits. Q7, RY/BY#, and Q6 each offer a method for determining whether a program or erase operation is complete or in progress. These three bits are discussed first.

Table 5. Write Operation Status

	Status		Q7# Note1	Q6	Q5 Note2	Q3	Q2	RY/BY#
In Progress	Word Program in Auto Program Algorithm		Q7#	Toggle	0	N/A	No Toggle	0
	Auto Erase Algorithm		0	Toggle	0	1	Toggle	0
	Erase Suspended Mode	Erase Suspend Read (Erase Suspended Sector)	1	No Toggle	0	N/A	Toggle	1
		Erase Suspend Read (Non-Erase Suspended Sector)	Data	Data	Data	Data	Data	1
		Erase Suspend Program	Q7#	Toggle	0	N/A	N/A	0
Exceeded Time Limits	Word Program in Auto Program Algorithm		Q7#	Toggle	1	N/A	No Toggle	0
	Auto Erase Algorithm		0	Toggle	1	1	Toggle	0
	Erase Suspend Program		Q7#	Toggle	1	N/A	N/A	0

Notes:

1. Performing successive read operations from the erase-suspended sector will cause Q2 to toggle.
2. Performing successive read operations from any address will cause Q6 to toggle.
3. Reading the word address being programmed while in the erase-suspend program mode will indicate logic "1" at the Q2 bit.
   However, successive reads from the erase-suspended sector will cause Q2 to toggle.

Q7: Data# Polling

The Data# Polling bit, Q7, indicates to the host system whether an Automatic Algorithm is in progress or completed, or whether the device is in Erase Suspend. Data# Polling is valid after the rising edge of the final WE# pulse in the program or erase command sequence.

During the Automatic Program algorithm, the device outputs on Q7 the complement of the datum programmed to Q7. This Q7 status also applies to programming during Erase Suspend. When the Automatic Program algorithm is complete, the device outputs the datum programmed to Q7. The system must provide the program address to read valid status information on Q7. If a program address falls within a protected sector, Data# Polling on Q7 is active for approximately 1 us, then the device returns to reading array data.

During the Automatic Erase algorithm, Data# Polling produces a "0" on Q7. When the Automatic Erase algorithm is complete, or if the device enters the Erase Suspend mode, Data# Polling produces a "1" on Q7. This is analogous to the complement/true datum output described for the Automatic Program algorithm: the erase function changes all the bits in a sector to "1" prior to this, the device outputs the "complement," or "0"." The system must provide an address within any of the sectors selected for erasure to read valid status information on Q7.

After an erase command sequence is written, if all sectors selected for erasing are protected, Data# Polling on Q7 is active for approximately 100 us, then the device returns to reading array data. If not all selected sectors are protected, the Automatic Erase algorithm erases the unprotected sectors, and ignores the selected sectors that are protected.

When the system detects Q7 has changed from the complement to true data, it can read valid data at Q7-Q0 on the following read cycles. This is because Q7 may change asynchronously with Q0-Q6 while Output Enable (OE#) is asserted low.

Q6:Toggle BIT I

Toggle Bit I on Q6 indicates whether an Automatic Program or Erase algorithm is in progress or complete, or whether the device has entered the Erase Suspend mode. Toggle Bit I may be read at any address, and is valid after the rising edge of the final WE# or CE#, whichever happens first pulse in the command sequence (prior to the program or erase operation), and during the sector time-out.

During an Automatic Program or Erase algorithm operation, successive read cycles to any address cause Q6 to toggle. The system may use either OE# or CE# to control the read cycles. When the operation is complete, Q6 stops toggling.

After an erase command sequence is written, if all sectors selected for erasing are protected, Q6 toggles for 100us and returns to reading array data. If not all selected sectors are protected, the Automatic Erase algorithm erases the unprotected sectors, and ignores the selected sectors that are protected.

The system can use Q6 and Q2 together to determine whether a sector is actively erasing or is erase suspended. When the device is actively erasing (that is, the Automatic Erase algorithm is in progress), Q6 toggling. When the device enters the Erase Suspend mode, Q6 stops toggling. However, the system must also use Q2 to determine which sectors are erasing or erase-suspended. Alternatively, the system can use Q7.

If a program address falls within a protected sector, Q6 toggles for approximately 2us after the program command sequence is written, then returns to reading array data.

Q6 also toggles during the erase-suspend-program mode, and stops toggling once the Automatic Program algorithm is complete.

Table 5 shows the outputs for Toggle Bit I on Q6.

Q2:Toggle Bit II

The "Toggle Bit II" on Q2, when used with Q6, indicates whether a particular sector is actively erasing (that is, the Automatic Erase algorithm is in process), or whether that sector is erase-suspended. Toggle Bit II is valid after the rising edge of the final WE# or CE#, whichever happens first pulse in the command sequence.

Q2 toggles when the system reads at addresses within those sectors that have been selected for erasure. (The system may use either OE# or CE# to control the read

cycles.) But Q2 cannot distinguish whether the sector is actively erasing or is erase-suspended. Q6, by comparison, indicates whether the device is actively erasing, or is in Erase Suspend, but cannot distinguish which sectors are selected for erasure. Thus, both status bits are required for sectors and mode information. Refer to Table 5 to compare outputs for Q2 and Q6.

Reading Toggle Bits Q6/ Q2

Whenever the system initially begins reading toggle bit status, it must read Q7-Q0 at least twice in a row to determine whether a toggle bit is toggling. Typically, the system would note and store the value of the toggle bit after the first read. After the second read, the system would compare the new value of the toggle bit with the first. If the toggle bit is not toggling, the device has completed the program or erase operation. The system can read array data on Q7-Q0 on the following read cycle.

However, if after the initial two read cycles, the system determines that the toggle bit is still toggling, the system also should note whether the value of Q5 is high (see the section on Q5). If it is, the system should then determine again whether the toggle bit is toggling, since the toggle bit may have stopped toggling just as Q5 went high. If the toggle bit is no longer toggling, the device has successfully completed the program or erase operation. If it is still toggling, the device did not complete the operation successfully, and the system must write the reset command to return to reading array data.

The remaining scenario is that system initially determines that the toggle bit is toggling and Q5 has not gone high. The system may continue to monitor the toggle bit and Q5 through successive read cycles, determining the status as described in the previous paragraph. Alternatively, it may choose to perform other system tasks. In this case, the system must start at the beginning of the algorithm when it returns to determine the status of the operation.

Q5:Program/Erase Timing

Q5 will indicate if the program or erase time has exceeded the specified limits (internal pulse count). Under these conditions Q5 will produce a "1". This time-out condition indicates that the program or erase cycle was not successfully completed. Data# Polling and Toggle Bit are the only operating functions of the device under this condition.

If this time-out condition occurs during sector erase operation, it specifies that a particular sector is bad and it may not be reused. However, other sectors are still functional and may be used for the program or erase operation. The device must be reset to use other sectors. Write the Reset command sequence to the device, and then execute program or erase command sequence. This allows the system to continue to use the other active sectors in the device.

If this time-out condition occurs during the chip erase operation, it specifies that the entire chip is bad or combination of sectors are bad.

If this time-out condition occurs during the word programming operation, it specifies that the entire sector containing that word is bad and this sector may not be reused, (other sectors are still functional and can be reused).

The time-out condition may also appear if a user tries to program a non blank location without erasing. In this case the device locks out and never completes the Automatic Algorithm operation. Hence, the system never reads a valid data on Q7 bit and Q6 never stops toggling. Once the Device has exceeded timing limits, the Q5 bit will indicate a "1". Please note that this is not a device failure condition since the device was incorrectly used.

The Q5 failure condition may appear if the system tries to program a to a "1" location that is previously programmed to "0". Only an erase operation can change a "0" back to a "1"." Under this condition, the device halts the operation, and when the operation has exceeded the timing limits, Q5 produces a "1".

Q3:Sector Erase Timer

After the completion of the initial sector erase command sequence, the sector erase time-out will begin. Q3 will remain low until the time-out is complete. Data# Polling and Toggle Bit are valid after the initial sector erase command sequence.

If Data# Polling or the Toggle Bit indicates the device has been written with a valid erase command, Q3 may be used to determine if the sector erase timer window is

still open. If Q3 is high ("1") the internally controlled erase cycle has begun; attempts to write subsequent commands to the device will be ignored until the erase operation is completed as indicated by Data Polling or Toggle Bit. If Q3 is low ("0"), the device will accept additional sector erase commands. To insure the command has been accepted, the system software should check the status of Q3 prior to and following each subsequent sector erase command. If Q3 were high on the second status check, the command may not have been accepted.

If the time between additional erase commands from the system can be less than 50us, the system need not to monitor Q3.

RY/BY#:READY/BUSY# OUTPUT

The RY/BY# is a dedicated, open-drain output pin that indicates whether an Embedded Algorithm is in progress or complete. The RY/BY# status is valid after the rising edge of the final WE# pulse in the command sequence. Since RY/BY# is an open-drain output, several RY/BY# pins can be tied together in parallel with a pull-up resistor to VCC .

If the output is low (Busy), the device is actively erasing or programming. (This includes programming in the Erase Suspend mode.) If the output is high (Ready), the device is ready to read array data (including during the Erase Suspend mode), or is in the standby mode.

ABSOLUTE MAXIMUM RATINGS

Storage Temperature

Plastic Packages . . . . -65°C to +150°C

Ambient Temperature

with Power Applied. . . . . -65°C to +125°C

Voltage with Respect to Ground

VCC (Note 1) . . . . . -0.5 V to +4.0 V

A9, OE#, ACC and

RESET# (Note 2) . . . .-0.5 V to +12.5 V

All other pins (Note 1) . . . . . -0.5 V to VCC +0.5 V

Output Short Circuit Current (Note 3) . . . . . 200 mA

Notes:

1. Minimum DC voltage on input or I/O pins is -0.5 V. During voltage transitions, input or I/O pins may overshoot VSS to -2.0 V for periods of up to 20 ns. Maximum DC voltage on input or I/O pins is VCC +0.5 V. During voltage transitions, input or I/O pins may overshoot to VCC +2.0 V for periods up to 20 ns.
2. Minimum DC input voltage on pins A9, OE#, and RESET# is -0.5 V. During voltage transitions, A9, OE#, and RESET# may overshoot VSS to -2.0 V for periods of up to 20 ns. Maximum DC input voltage on pin A9 is +12.5 V which may overshoot to 14.0 V for periods up to 20 ns.
3. No more than one output may be shorted to ground at a time. Duration of the short circuit should not be greater than one second.

Stresses above those listed under "Absolute Maximum Ratings" may cause permanent damage to the device. This is a stress rating only; functional operation of the device at these or any other conditions above those indicated in the operational sections of this data sheet is not implied. Exposure of the device to absolute maximum rating conditions for extended periods may affect device reliability.

OPERATING RATINGS

Commercial (C) Devices

Ambient Temperature (T_A). . . . . 0° C to +70° C

Industrial (I) Devices

Ambient Temperature (T_A). . . . . -40° C to +85° C

V_{CC} Supply Voltages

V_{CC} for full voltage range. . . . . +2.7 V to 3.6 V

Operating ranges define those limits between which the functionality of the device is guaranteed.

DC CHARACTERISTICS TA=-40° C to 85° C, VCC=2.7V~3.6V

Para-meter	Description	Test Conditions		Min	Typ	Max	Unit
I LI	Input Load Current (Note 1)	VIN = VSS to VCC , VCC = VCC max				±1.0	uA
I LIT	A9,ACC Input Load Current	VCC=VCC max; A9 = 12.5V				35	uA
I LO	Output Leakage Current	VOUT = VSS to VCC , VCC= VCC max				±1.0	uA
ICC1	VCC Active Read Current	CE#= VIL,	5 MHz		9	16	mA
	(Notes 2,3)	OE# = VIH	1 MHz		2	4	mA
ICC2	VCC Active Write Current (Notes 2,4,6)	CE#= V IL , OE# = V IH			26	30	mA
ICC3	VCC Standby Current (Note 2)	CE#,RESET#,ACC=VCC±0.3V WP#=VIH			0.2	15	uA
ICC4	VCC Reset Current (Note 2)	RESET=VSS±0.3V WP#=VIH			0.2	15	uA
ICC5	Automatic Sleep Mode (Note 2,5)	VIL = V SS ±0.3 V, VIH = VCC ±0.3 V, ACC = VCC ±0.3 V, WP#=VIH			0.2	15	uA
IACC	ACC Accelerated Program	CE#=VIL, OE#=VIH	ACC pin		5	10	mA
	Current, Word or Byte		VCC pin		15	30	mA
VIL	Input Low Voltage			-0.5		0.8	V
VIH	Input High Voltage			0.7xVcc		Vcc+0.3	V
VHH	Voltage for ACC Program Acceleration	VCC = 3.0 V ±10%		11.5		12.5	V
VID	Voltage for Automatic Select and Temporary Sector Unprotect	VCC = 3.0 V ±10%		11.5		12.5	V
VOL	Output Low Voltage	IOL= 4.0mA,VCC=VCC min				0.45	V
VOH1	Output High Voltage	IOH=-2.0mA,VCC=VCC min		0.85VCC			V
VOH2		IOH=-100uA,VCC=VCC min		VCC-0.4			V
VLKO	Low VCC Lock-Out Voltage (Note 4)			1.5			V

Notes:
1. On the WP# pin only, the maximum input load current when WP# = VIL is ±5.0uA.
2. Maximum ICC specifications are tested with VCC = VCC max.
3. The ICC current listed is typically is less than 2 mA/MHz, with OE# at VIH . Typical specifications are for VCC = 3.0V.
4. ICC active while Embedded Erase or Embedded Program is in progress.
5. Automatic sleep mode enables the low power mode when addresses remain stable for t ACC + 30 ns. Typical sleep mode current is 200 nA.
6. Not 100% tested.

SWITCHING TEST CIRCUITS

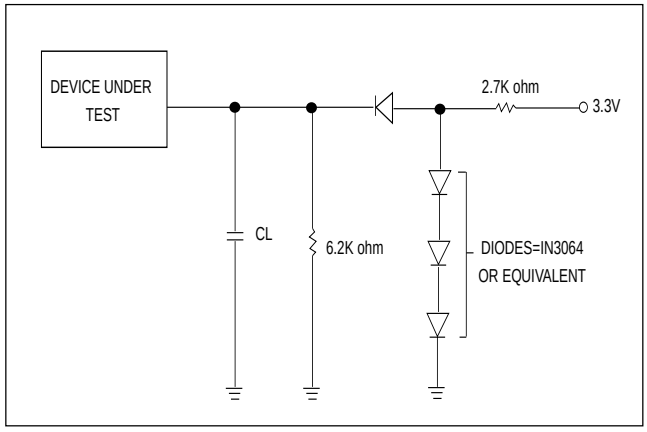

TEST SPECIFICATIONS

Test Condition	90	120	Unit
Output Load	1 TTL gate		
Output Load Capacitance, CL (including jig capacitance)	30	100	pF
Input Rise and Fall Times	5		ns
Input Pulse Levels	0.0-3.0		V
Input timing measurement reference levels	1.5		V
Output timing measurement reference levels	1.5		V

KEY TO SWITCHING WAVEFORMS

WAVEFORM	INPUTS	OUTPUTS
	Steady	
	Changing from H to L	
	Changing from L to H	
	Don't Care, Any Change Permitted	Changing, State Unknown
	Does Not Apply	Center Line is High Impedance State (High Z)

SWITCHING TEST WAVEFORMS

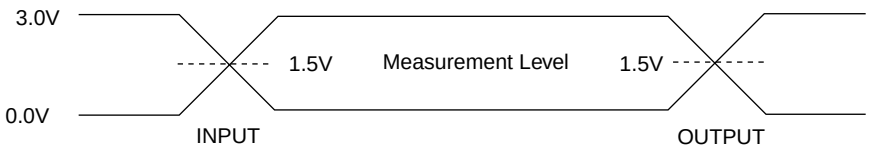

AC CHARACTERISTICS

Read-Only Operations

Parameter Std.	Description		Test Setup		Speed Options 90	Speed Options 120	Unit
tRC	Read Cycle Time (Note 1)			Min	90	120	ns
tACC	Address to Output Delay		CE#, OE#=VIL	Max	90	120	ns
tCE	Chip Enable to Output Delay		OE#=VIL	Max	90	120	ns
tOE	Output Enable to Output Delay			Max	35	50	ns
tDF	Chip Enable to Output High Z (Note 1)			Max	30	30	ns
tDF	Output Enable to Output High Z (Note 1)			Max	30	30	ns
tOH	Output Hold Time From Address, CE# or OE#, whichever Occurs First			Min	0		ns
tOEH	Output Enable Hold Time (Note 1)	Read		Min	0		ns
		Toggle and Data# Polling		Min	10		ns

Notes:
1. Not 100% tested.
2. See SWITCHING TEST CIRCUITS and TEST SPECIFICATIONS TABLE for test specifications.

Figure 1. COMMAND WRITE OPERATION

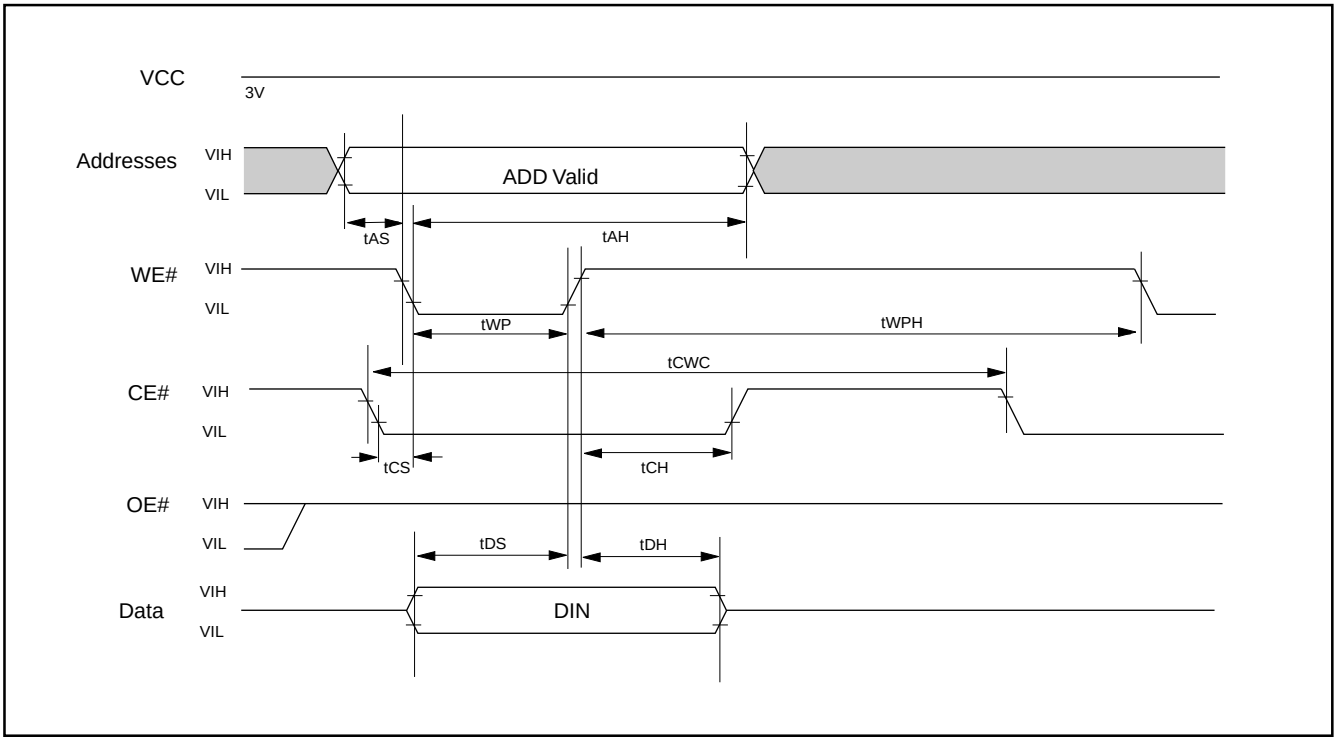

READ/RESET OPERATION

Figure 2. READ TIMING WAVEFORMS

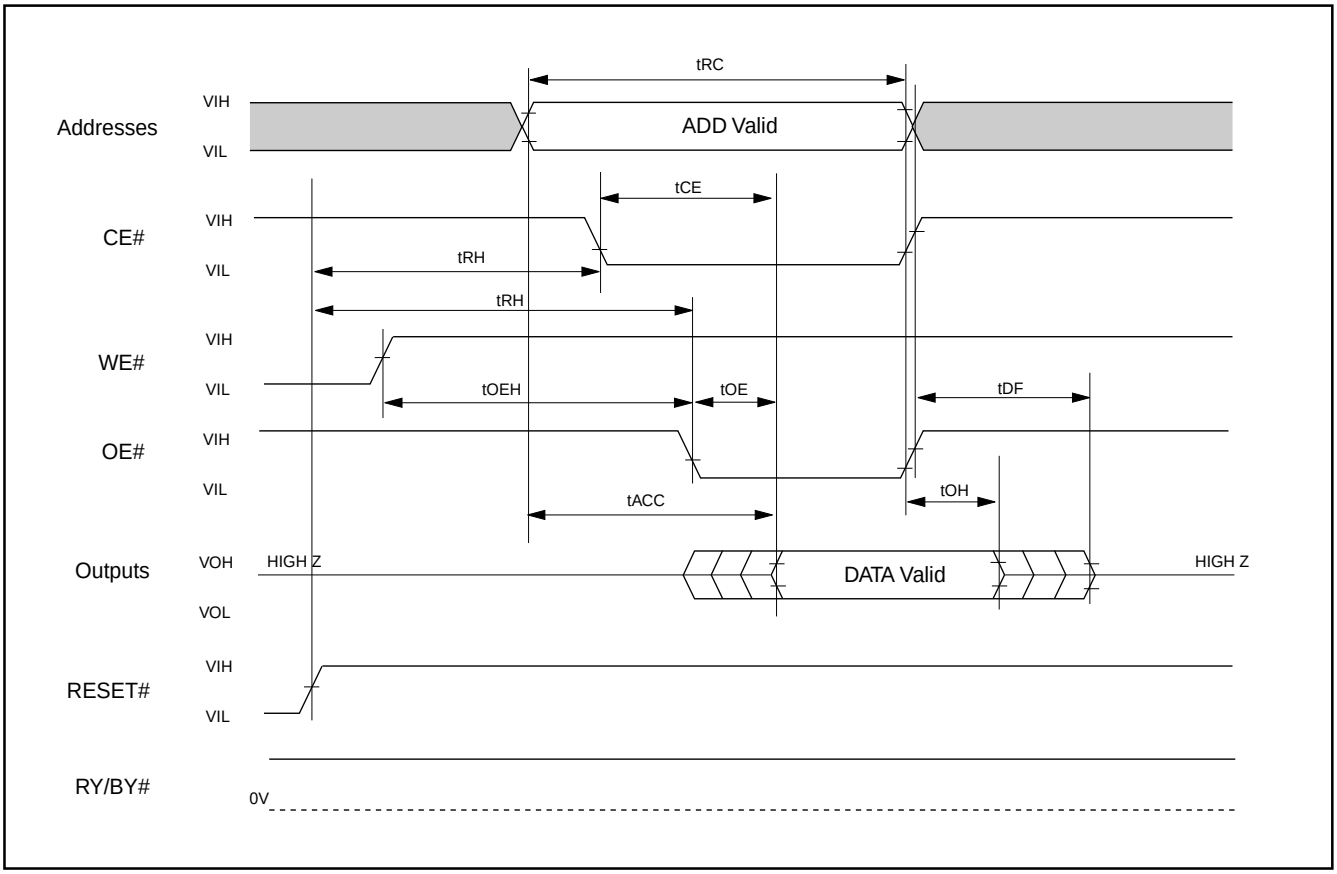

AC CHARACTERISTICS

Parameter	Description	Test Setup	All Speed Options	Unit
tREADY1	RESET# PIN Low (During Automatic Algorithms) to Read or Write (See Note)	MAX	20	us
tREADY2	RESET# PIN Low (NOT During Automatic Algorithms) to Read or Write (See Note)	MAX	500	ns
tRP	RESET# Pulse Width (NOT During Automatic Algorithms)	MIN	500	ns
tRH	RESET# High Time Before Read (See Note)	MIN	50	ns
tRB	RY/BY# Recovery Time (to CE#, OE# go low)	MIN	0	ns
tRPD	RESET# Low to Standby Mode	MIN	20	us

Note:Not 100% tested

Figure 3. RESET# TIMING WAVEFORM

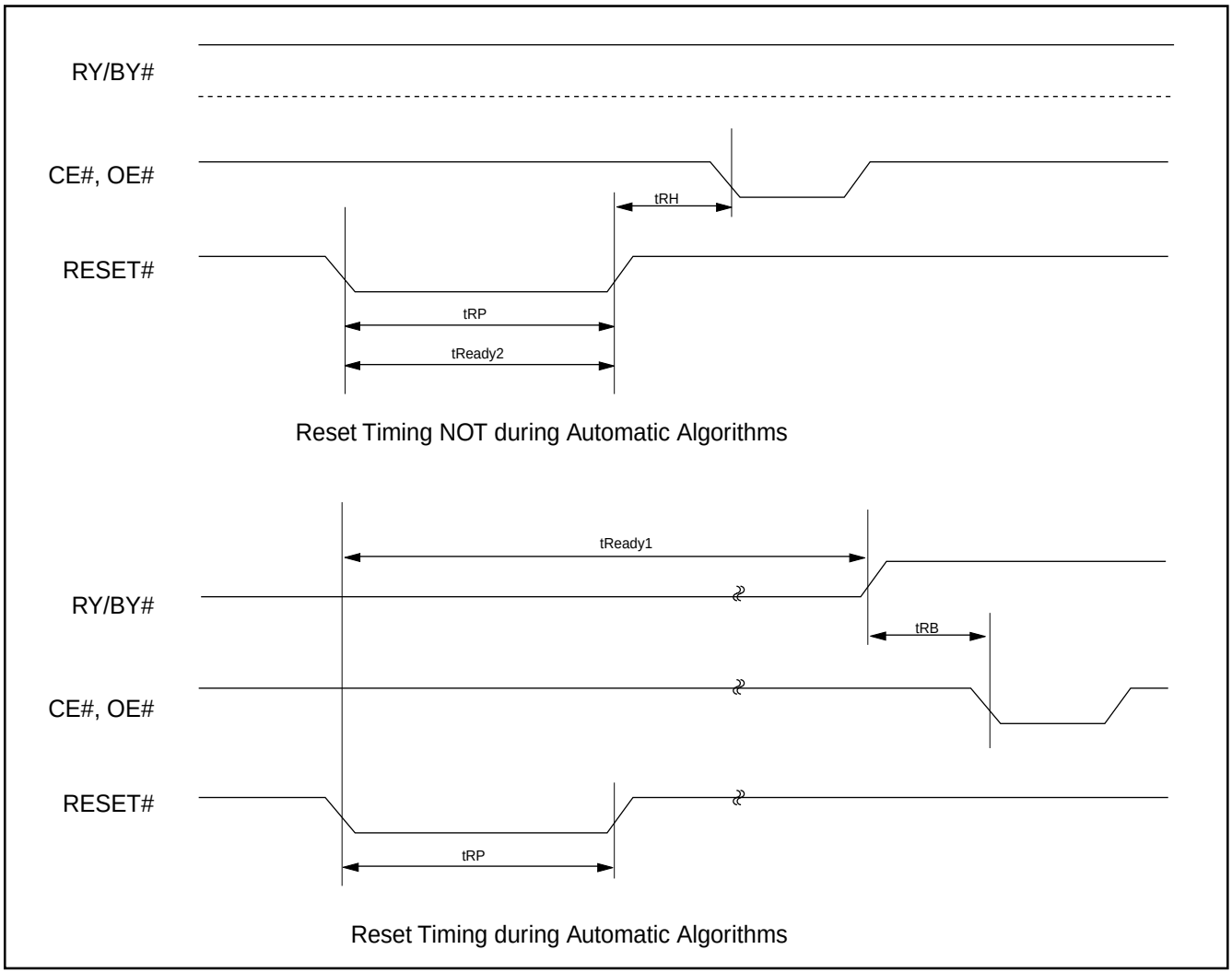

ERASE/PROGRAM OPERATION

Figure 4. AUTOMATIC CHIP/SECTOR ERASE TIMING WAVEFORM

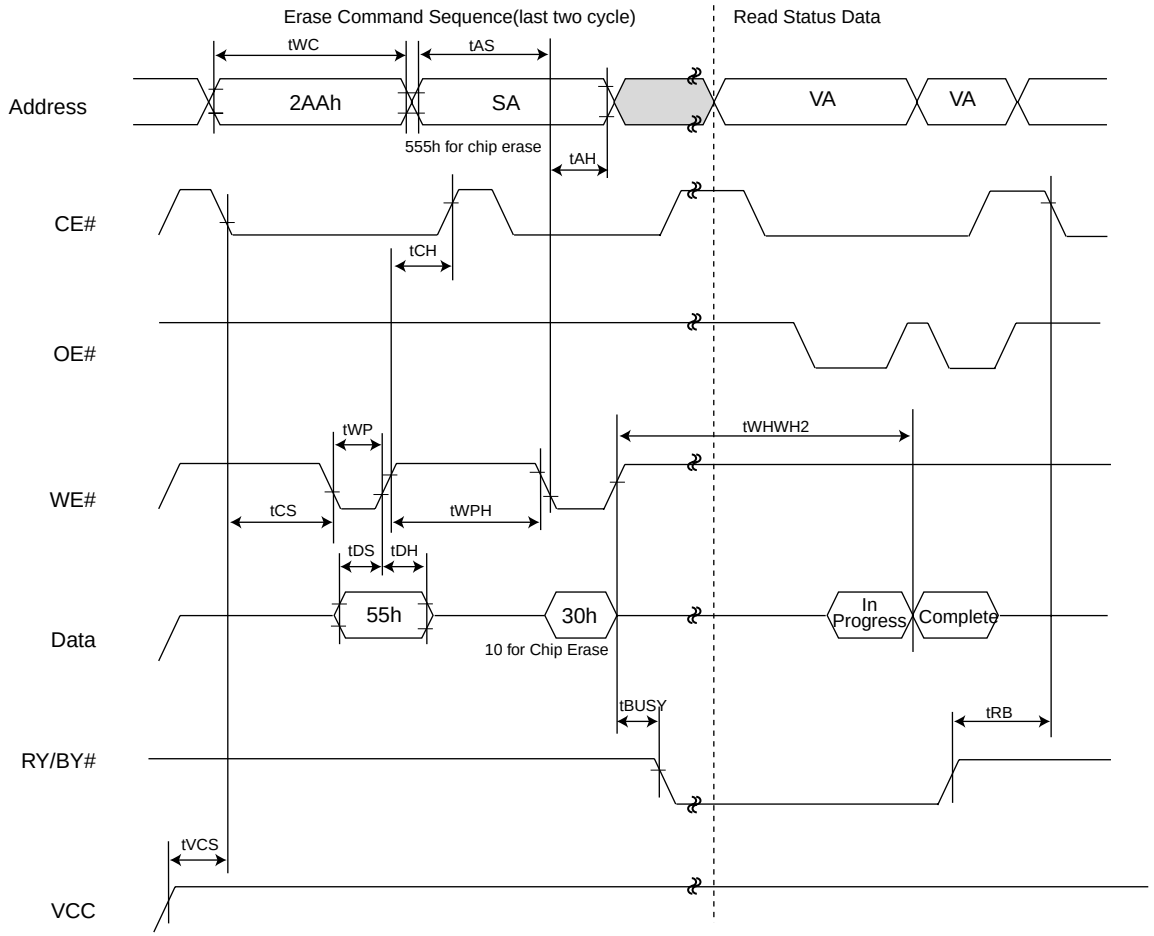

NOTES:

1.SA=sector address(for Sector Erase), VA=Valid Address for reading status data(see "Write Operation Status").

Figure 5. AUTOMATIC CHIP ERASE ALGORITHM FLOWCHART

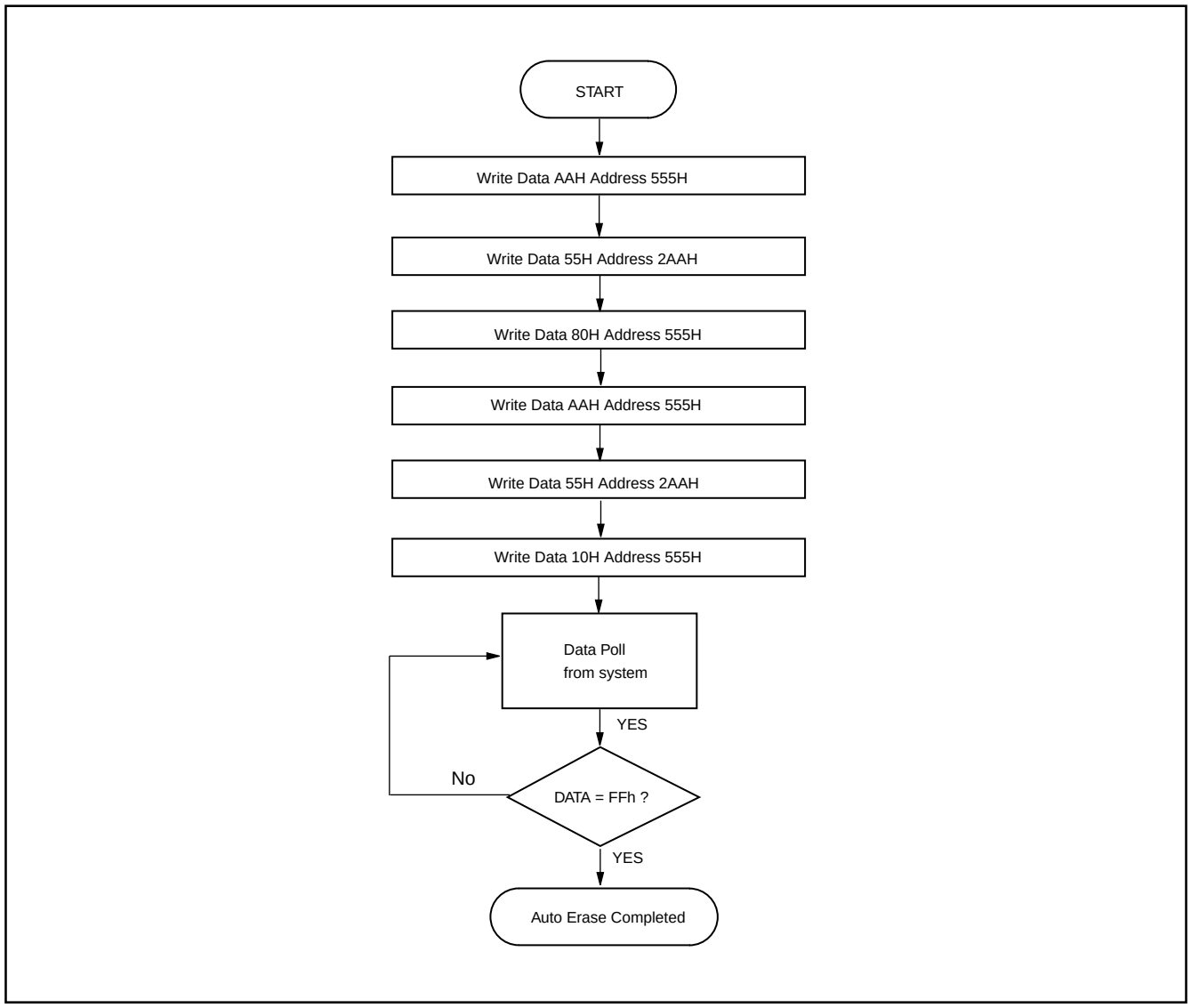

Figure 6. AUTOMATIC SECTOR ERASE ALGORITHM FLOWCHART

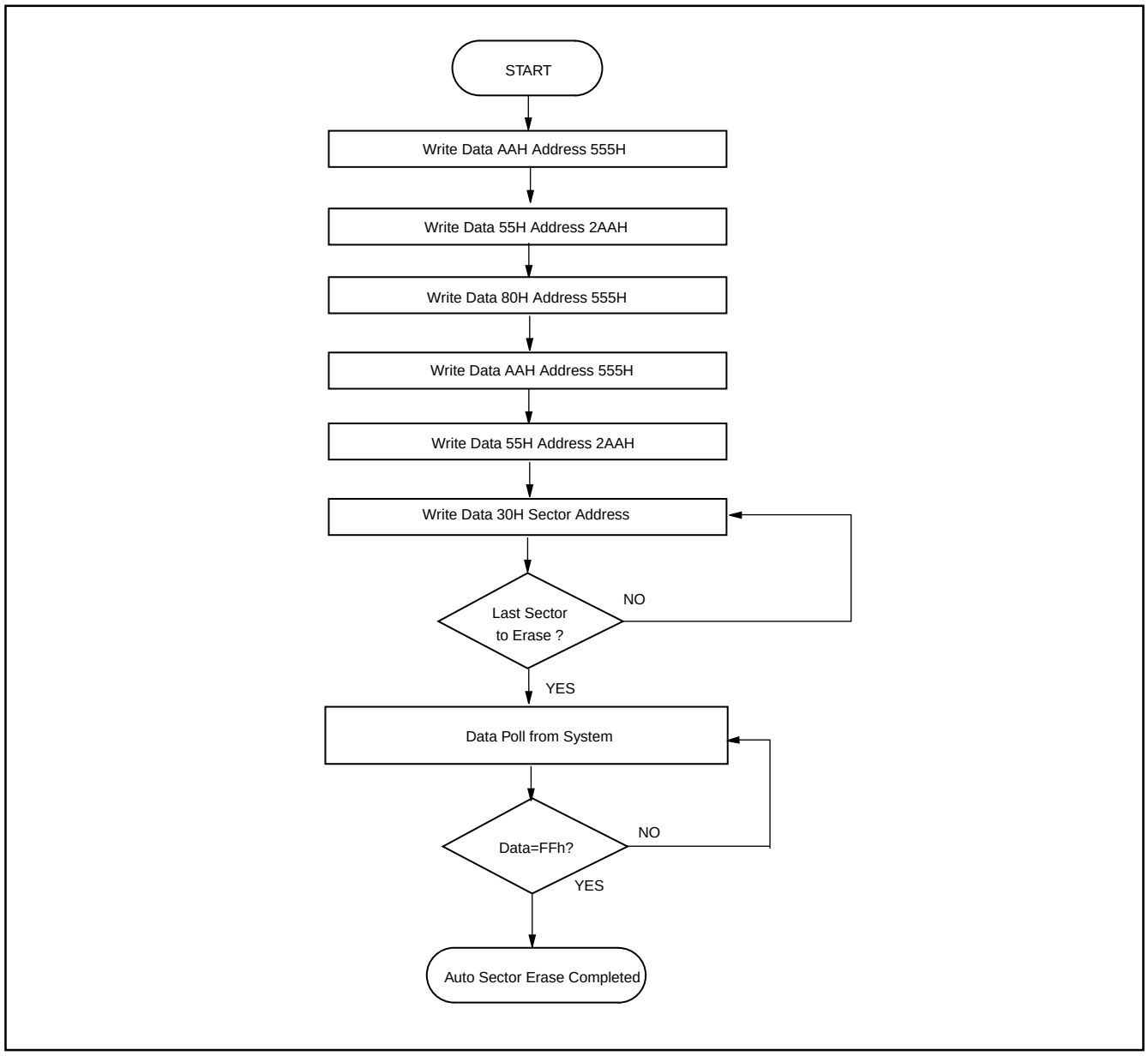

Figure 7. ERASE SUSPEND/RESUME FLOWCHART

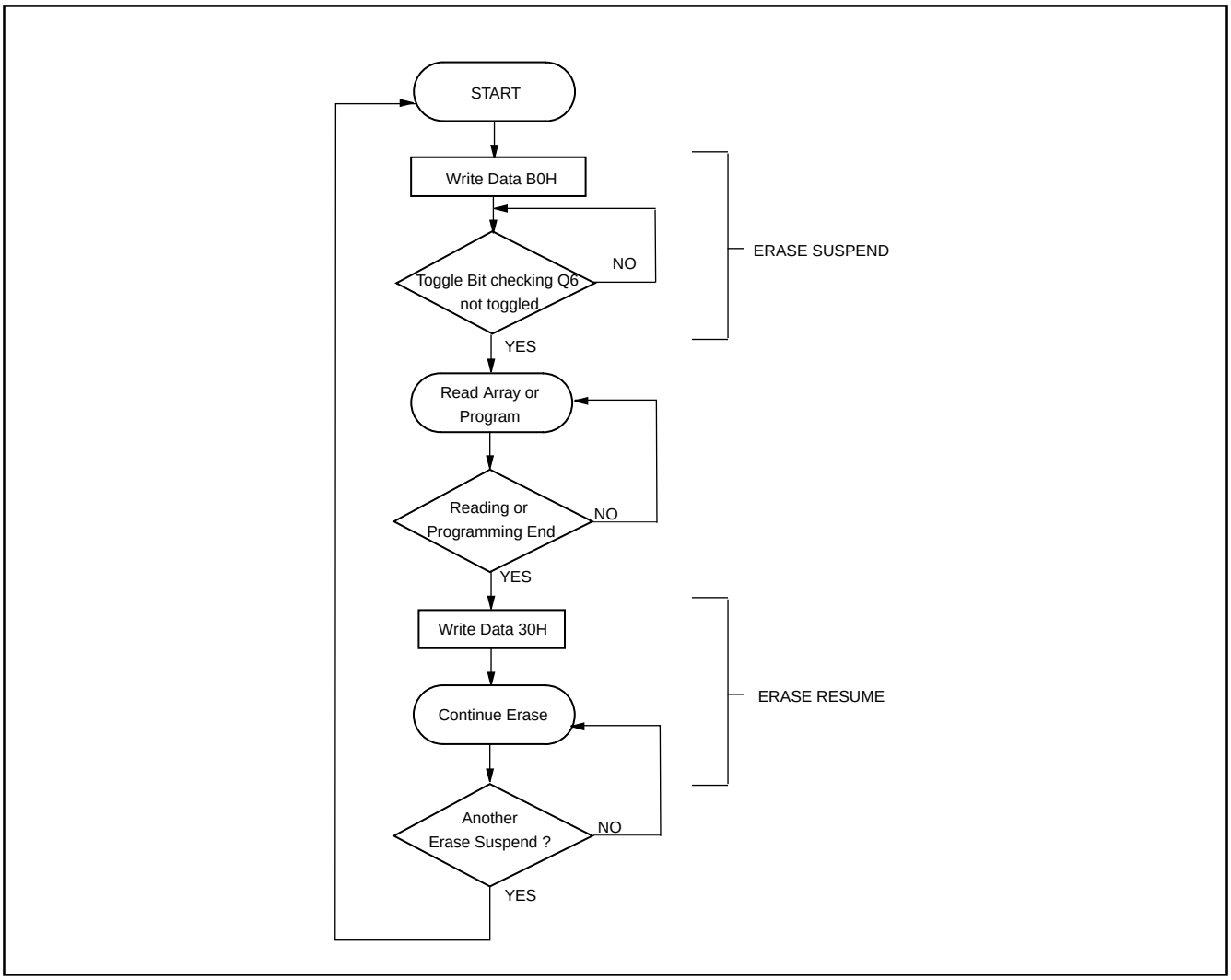

Figure 8. SECURED SILICON SECTOR PROTECTED ALGORITHMS FLOWCHART

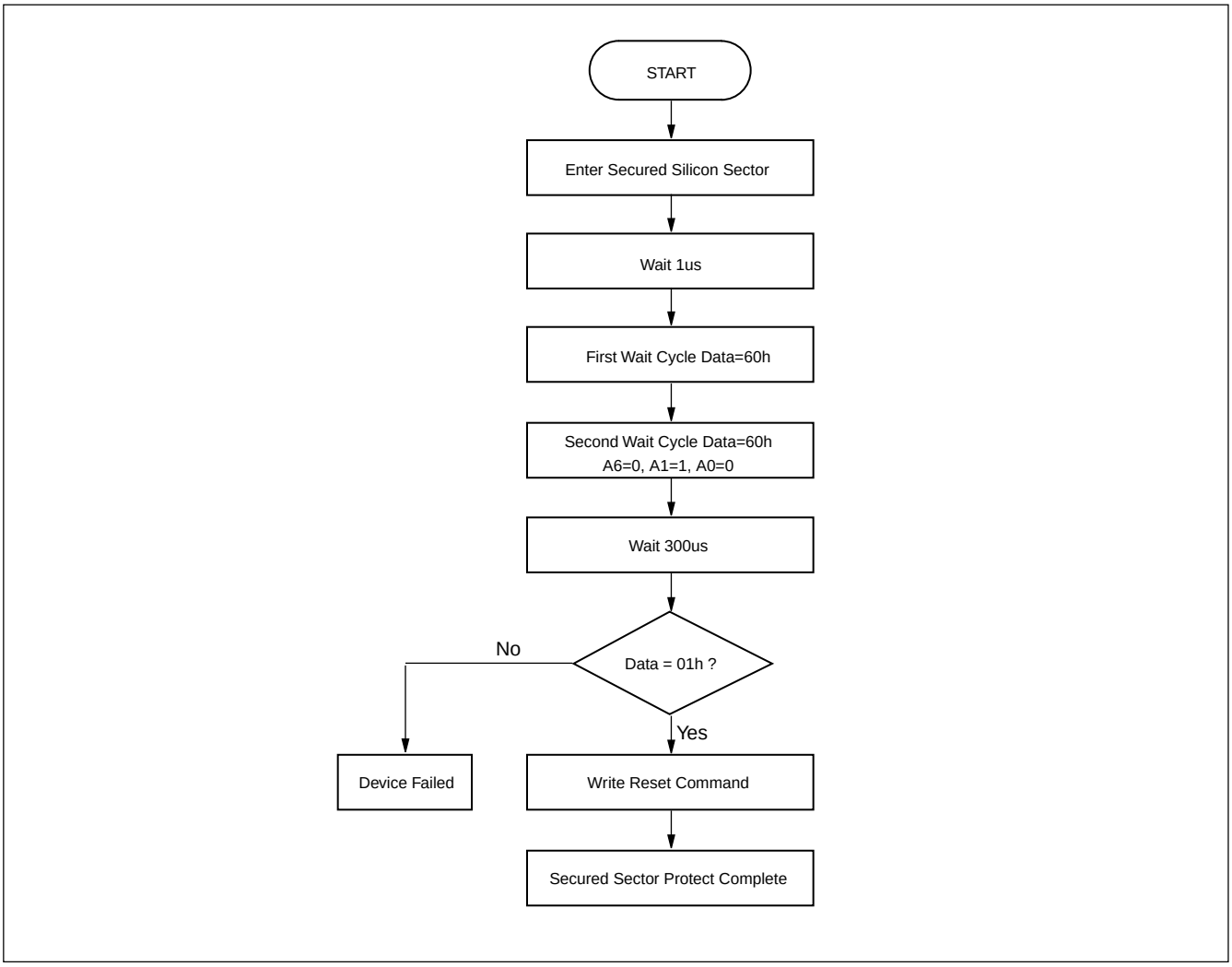

AC CHARACTERISTICS

Erase and Program Operations

Parameter Std.	Description		Speed Options 90	Speed Options 120	Unit
tWC	Write Cycle Time (Note 1)	Min	90	120	ns
tCWC	Command Write Cycle Time (Note 1)	Min	90	120	ns
tAS	Address Setup Time	Min	0		ns
tASO	Address Setup Time to OE# low during toggle bit polling	Min	15		ns
tAH	Address Hold Time	Min	45	50	ns
tAHT	Address Hold Time From CE# or OE# high during toggle bit polling	Min	0		ns
tDS	Data Setup Time	Min	45	50	ns
tDH	Data Hold Time	Min	0		ns
tOEPH	Output Enable High during toggle bit polling	Min	20		ns
tGHWL	Read Recovery Time Before Write (OE# High to WE# Low)	Min	0		ns
tGHEL	Read Recovery Time Before Write	Min	0		ns
tCS	CE# Setup Time	Min	0		ns
tCH	CE# Hold Time	Min	0		ns
tWP	Write Pulse Width	Min	35	50	ns
tWPH	Write Pulse Width High	Min	30		ns
tWHWH1	Word Programming Operation (Note 2)	Typ	11		us
tWHWH2	Sector Erase Operation (Note 2)	Typ	1.6		sec
tVHH	VHH Rise and Fall Time (Note 1)	Min	250		ns
tVCS	VCC Setup Time (Note 1)	Min	50		us
tRB	Write Recovery Time from RY/BY#	Min	0		ns
tBUSY	Program/Erase Valid to RY/BY# Delay	Min	90		ns

Notes:
1. Not 100% tested.
2. See the "Erase And Programming Performance" section for more information.

Figure 9. AUTOMATIC PROGRAM TIMING WAVEFORMS

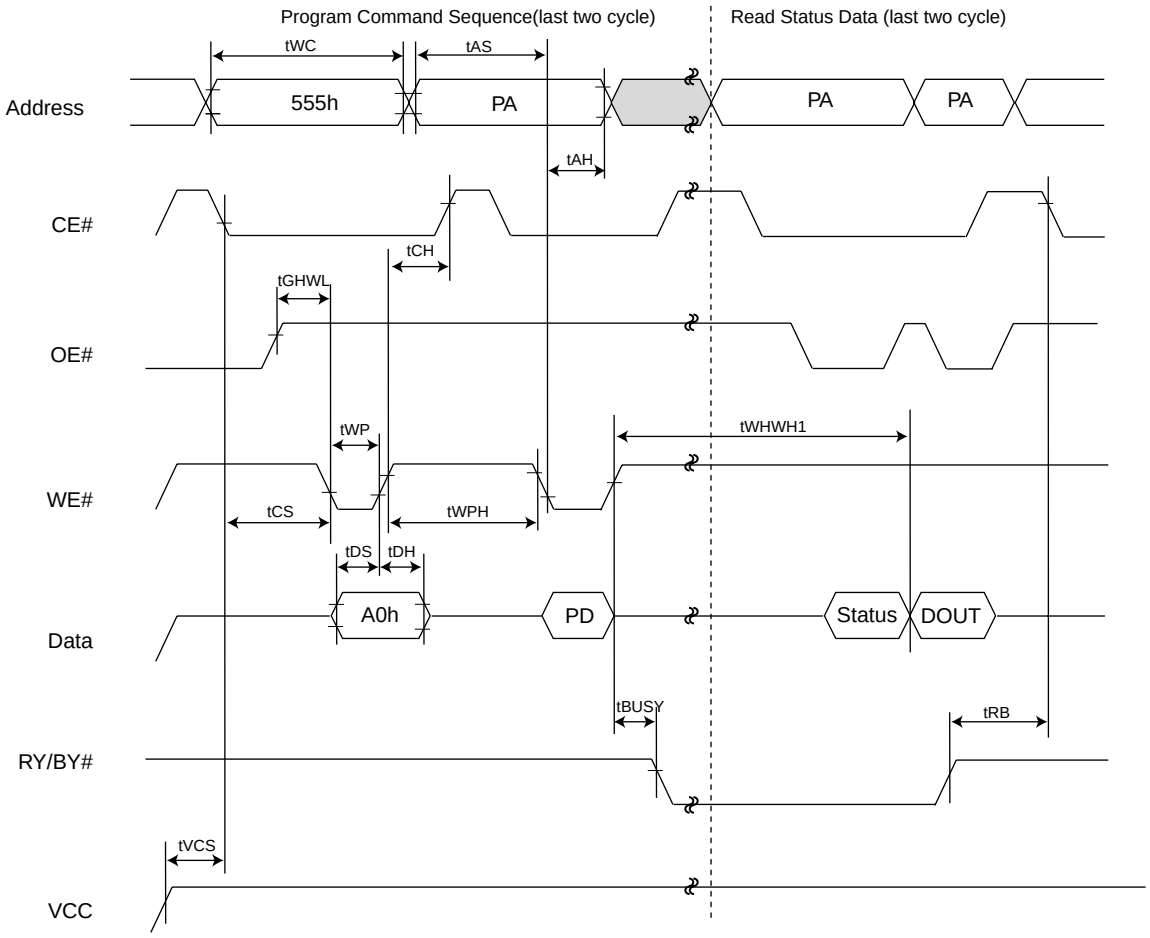

NOTES:
1.PA=Program Address, PD=Program Data, DOUT is the true data the program address

Figure 10. ACCELERATED PROGRAM TIMING DIAGRAM

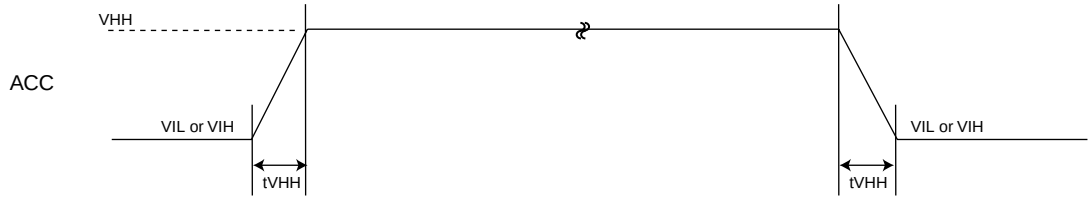

AC CHARACTERISTICS

Alternate CE# Controlled Erase and Program Operations

Parameter Std.	Description		Speed Options 90	Speed Options 120	Unit
tWC	Write Cycle Time (Note 1)	Min	90	120	ns
tAS	Address Setup Time	Min	0		ns
tAH	Address Hold Time	Min	45	50	ns
tDS	Data Setup Time	Min	45	50	ns
tDH	Data Hold Time	Min	0		ns
tGHEL	Read Recovery Time Before Write (OE# High to WE# Low)	Min	0		ns
tWS	WE# Setup Time	Min	0		ns
tWH	WE# Hold Time	Min	0		ns
tCP	CE# Pulse Width	Min	45	50	ns
tCPH	CE# Pulse Width High	Min	30		ns
tWHWH1	Word Programming Operation (Note 2)	Typ	11		us
tWHWH2	Sector Erase Operation (Note 2)	Typ	1.6		sec

Notes:
1. Not 100% tested.
2. See the "Erase And Programming Performance" section for more information.

Figure 11. CE# CONTROLLED PROGRAM TIMING WAVEFORM

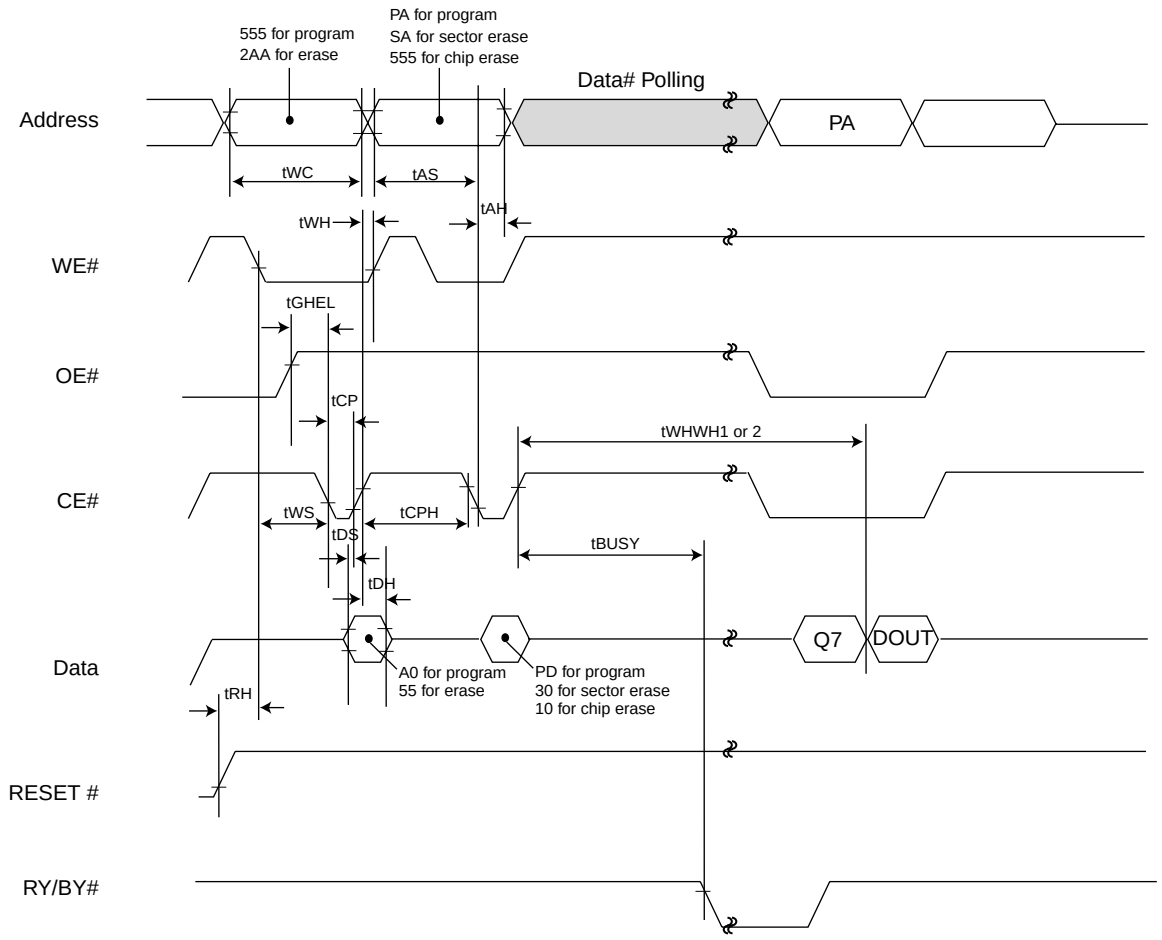

NOTES:

1.PA=Program Address, PD=Program Data, DOUT=Data Out, Q7=complement of data written to device.
2.Figure indicates the last two bus cycles of the command sequence.

Figure 12. AUTOMATIC PROGRAMMING ALGORITHM FLOWCHART

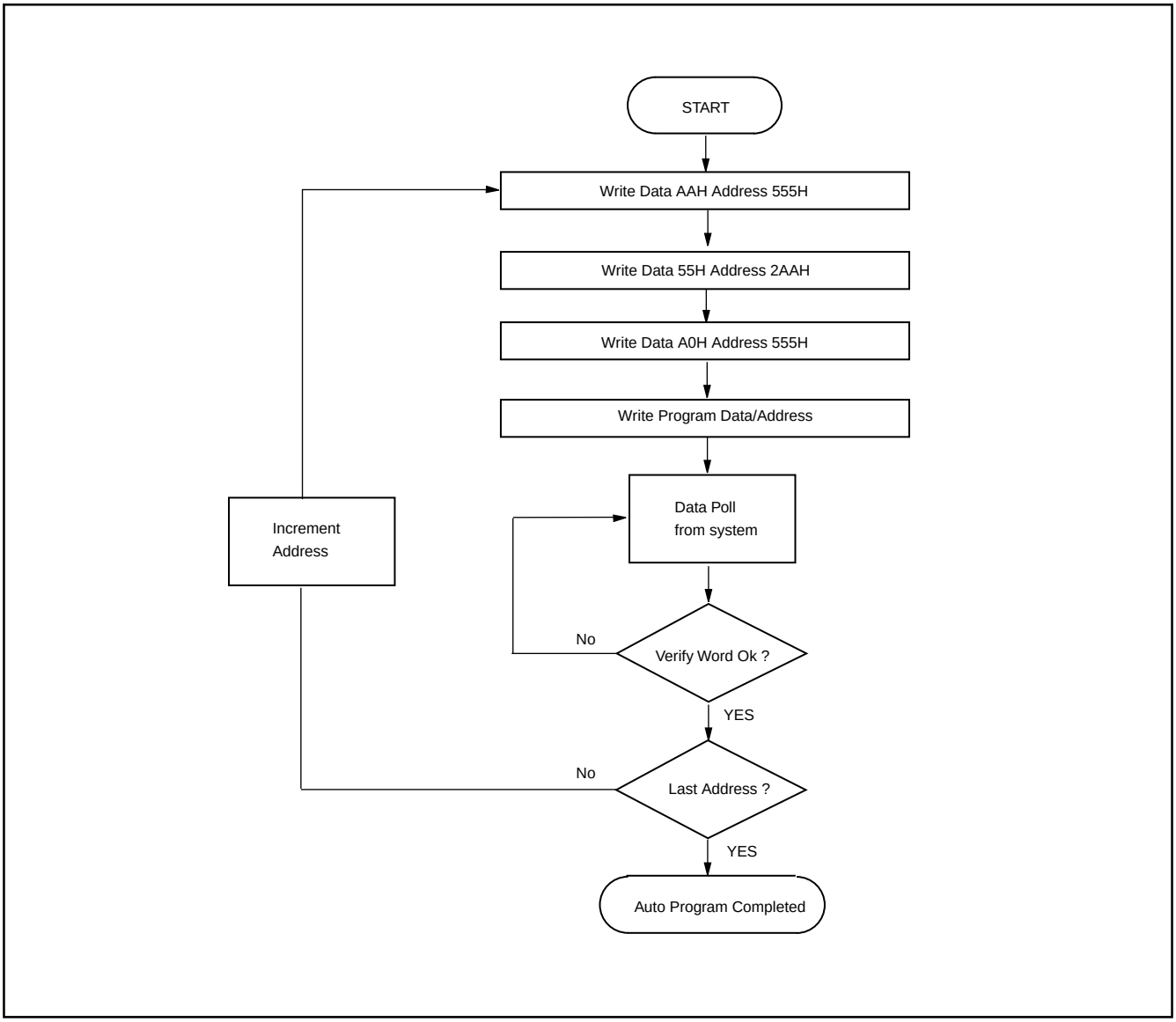

SECTOR GROUP PROTECT/CHIP UNPROTECT

Figure 13. Sector Group Protect / Chip Unprotect Waveform (RESET# Control)

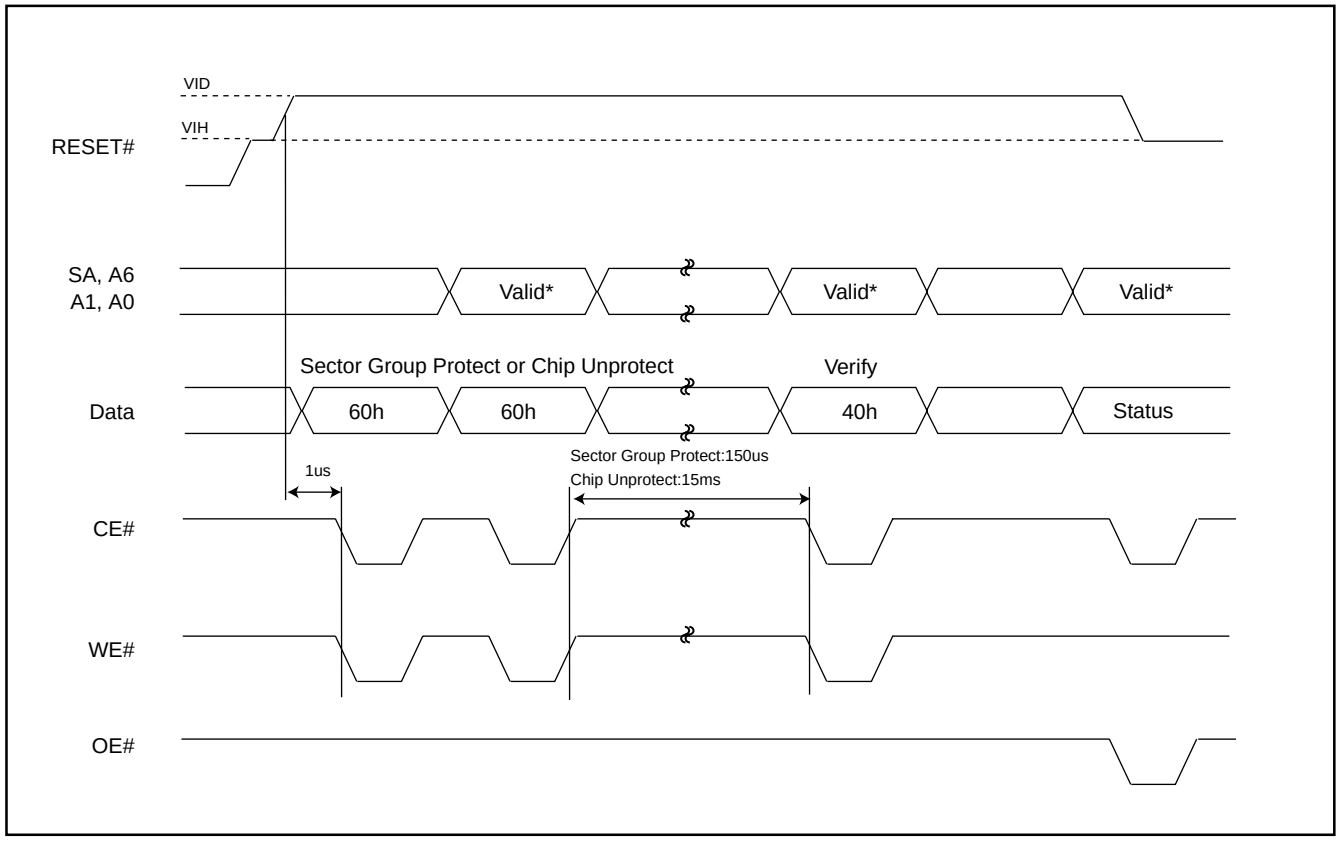

Note: For sector group protect A6=0, A1=1, A0=0. For sector group unprotect A6=1, A1=1, A0=0

Figure 14. IN-SYSTEM SECTOR GROUP PROTECT/CHIP UNPROTECT ALGORITHMS WITH RESET#=VID

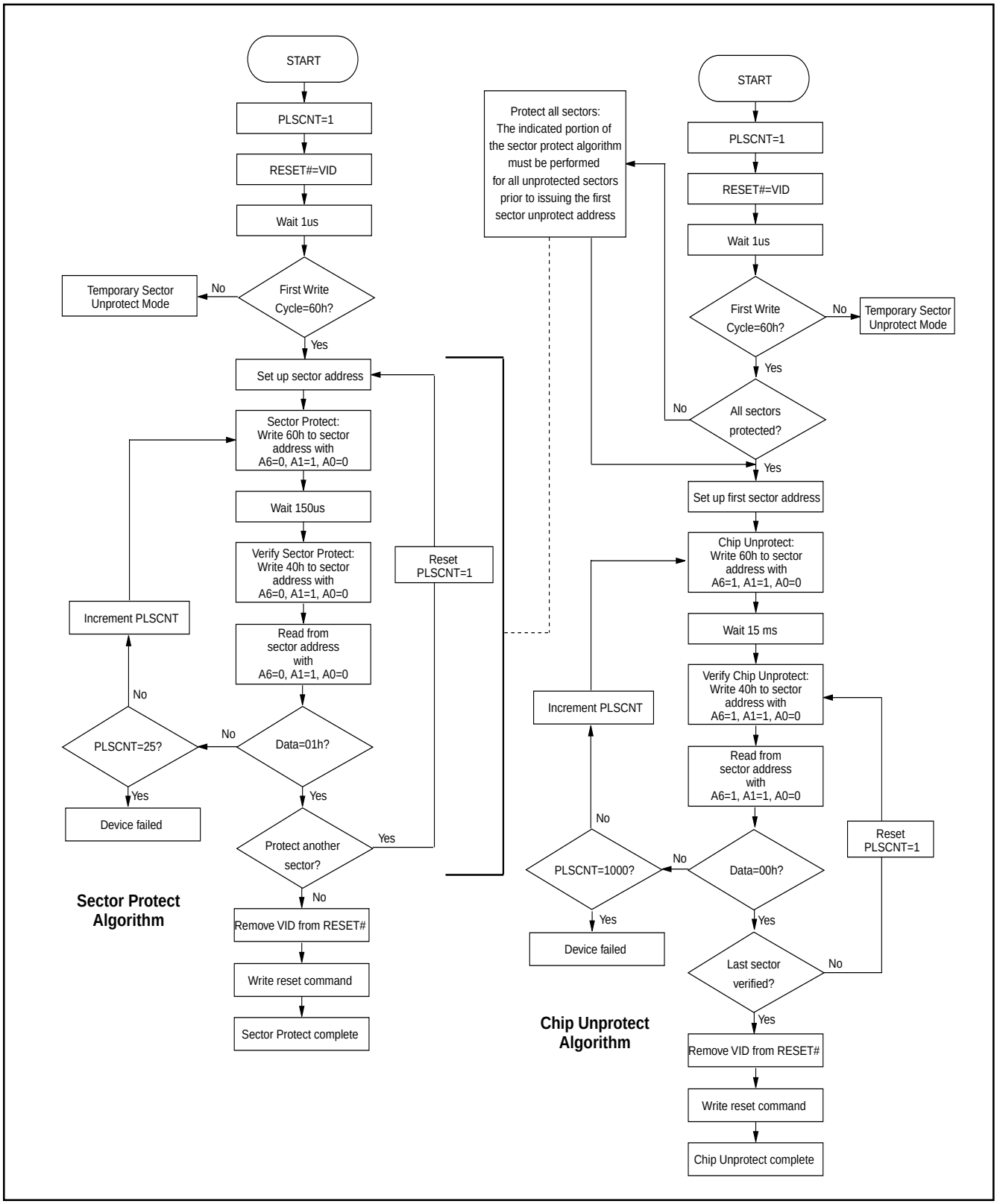

AC CHARACTERISTICS

Parameter	Description	Test Setup	All Speed Options	Unit
tVLHT	Voltage transition time	Min.	4	us
tWPP1	Write pulse width for sector group protect	Min.	100	ns
tWPP2	Write pulse width for chip unprotect	Min.	100	ns
tOESP	OE# setup time to WE# active	Min.	4	us

Figure 15. SECTOR GROUP PROTECT TIMING WAVEFORM (A9, OE# Control)

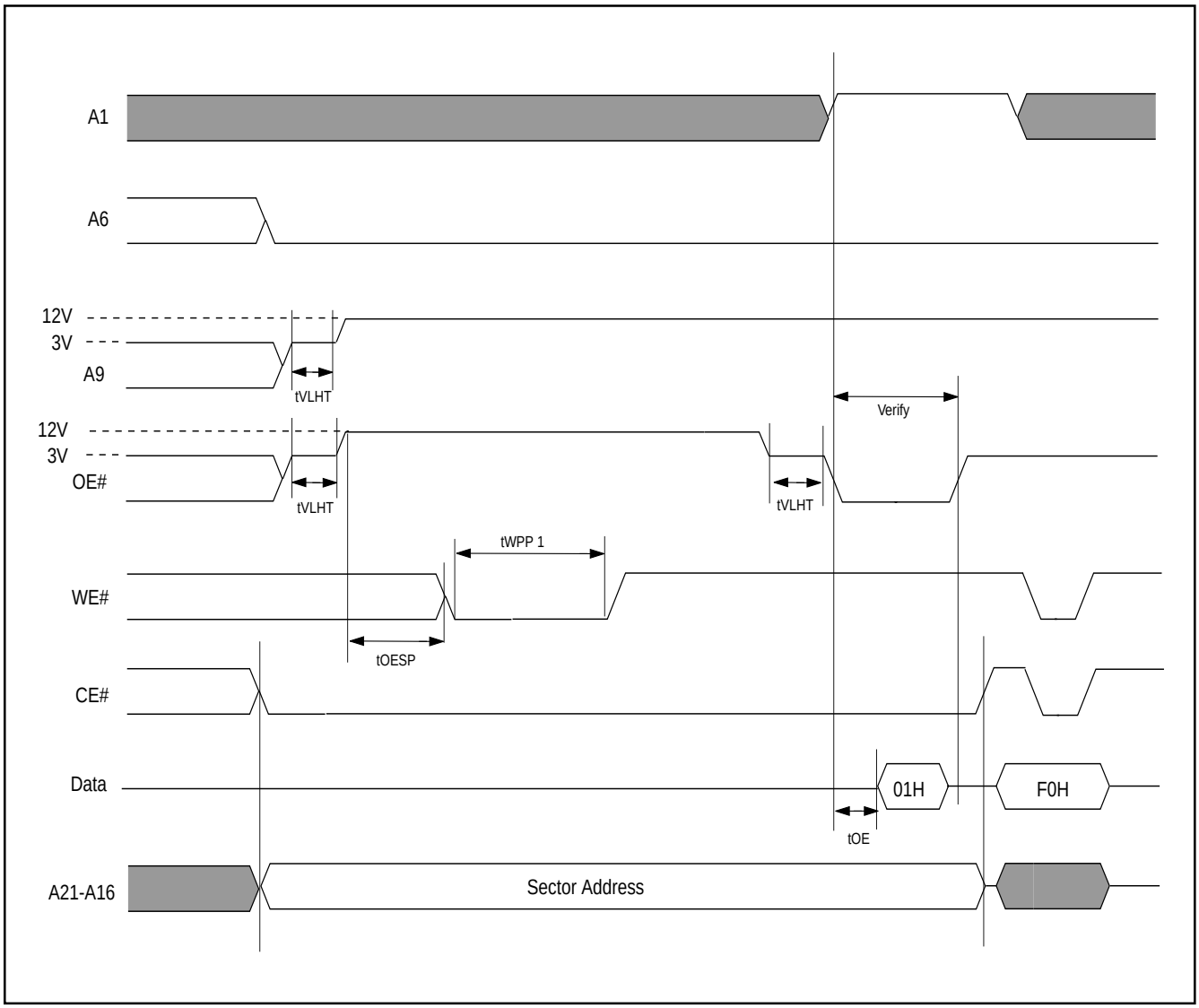

Figure 16. SECTOR GROUP PROTECTION ALGORITHM (A9, OE# Control)

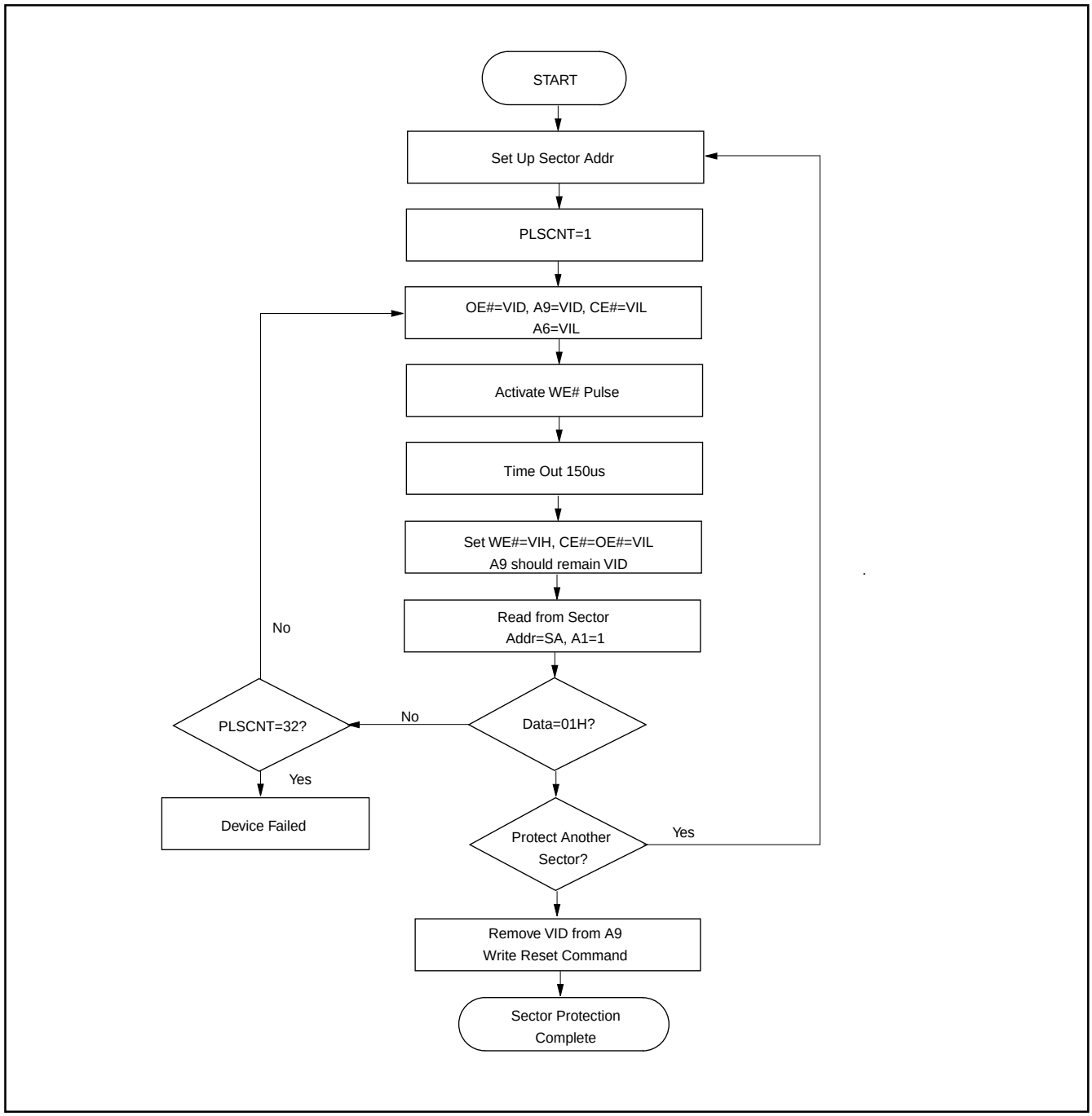

Figure 17. CHIP UNPROTECT TIMING WAVEFORM (A9, OE# Control)

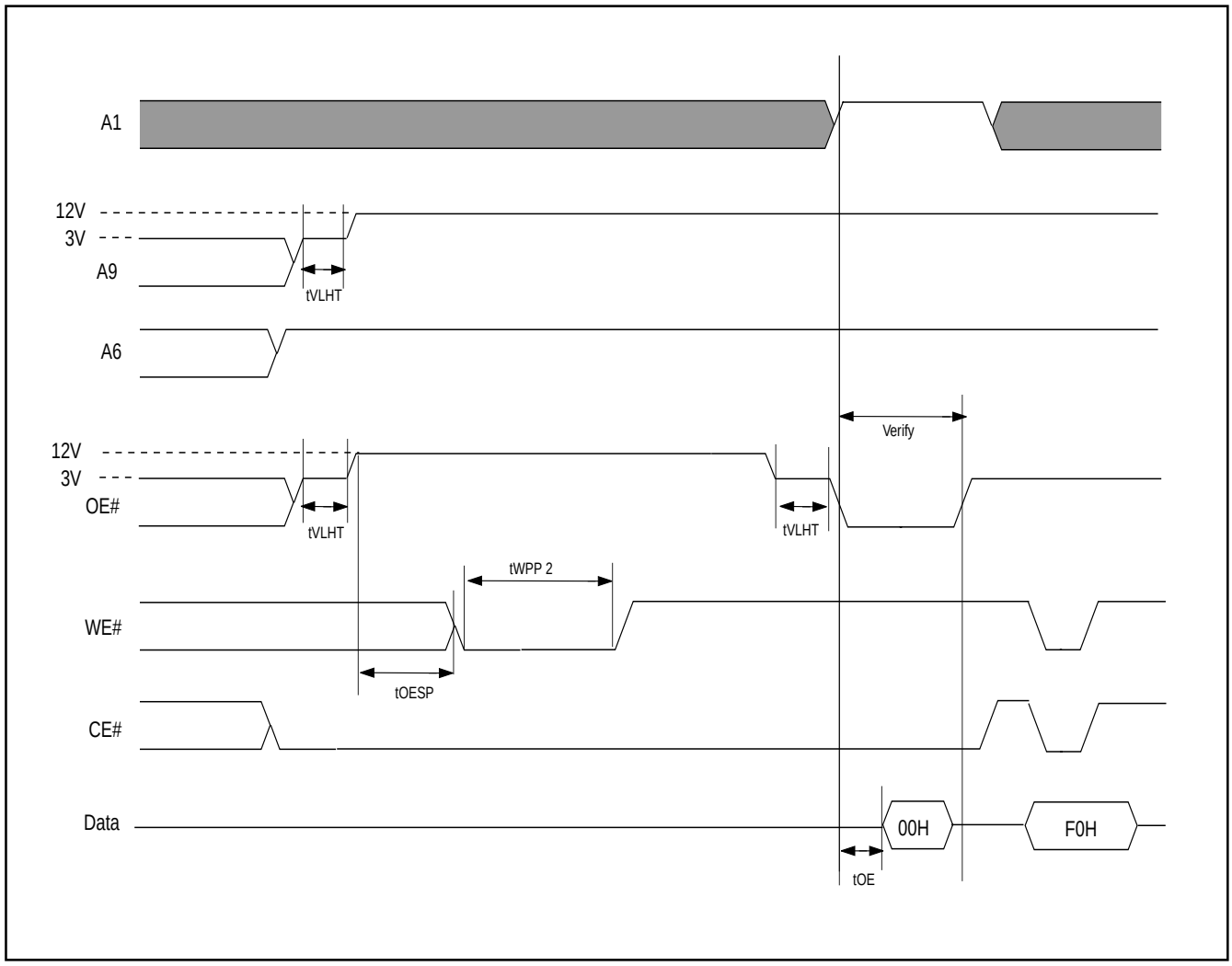

Figure 18. CHIP UNPROTECT FLOWCHART (A9, OE# Control)

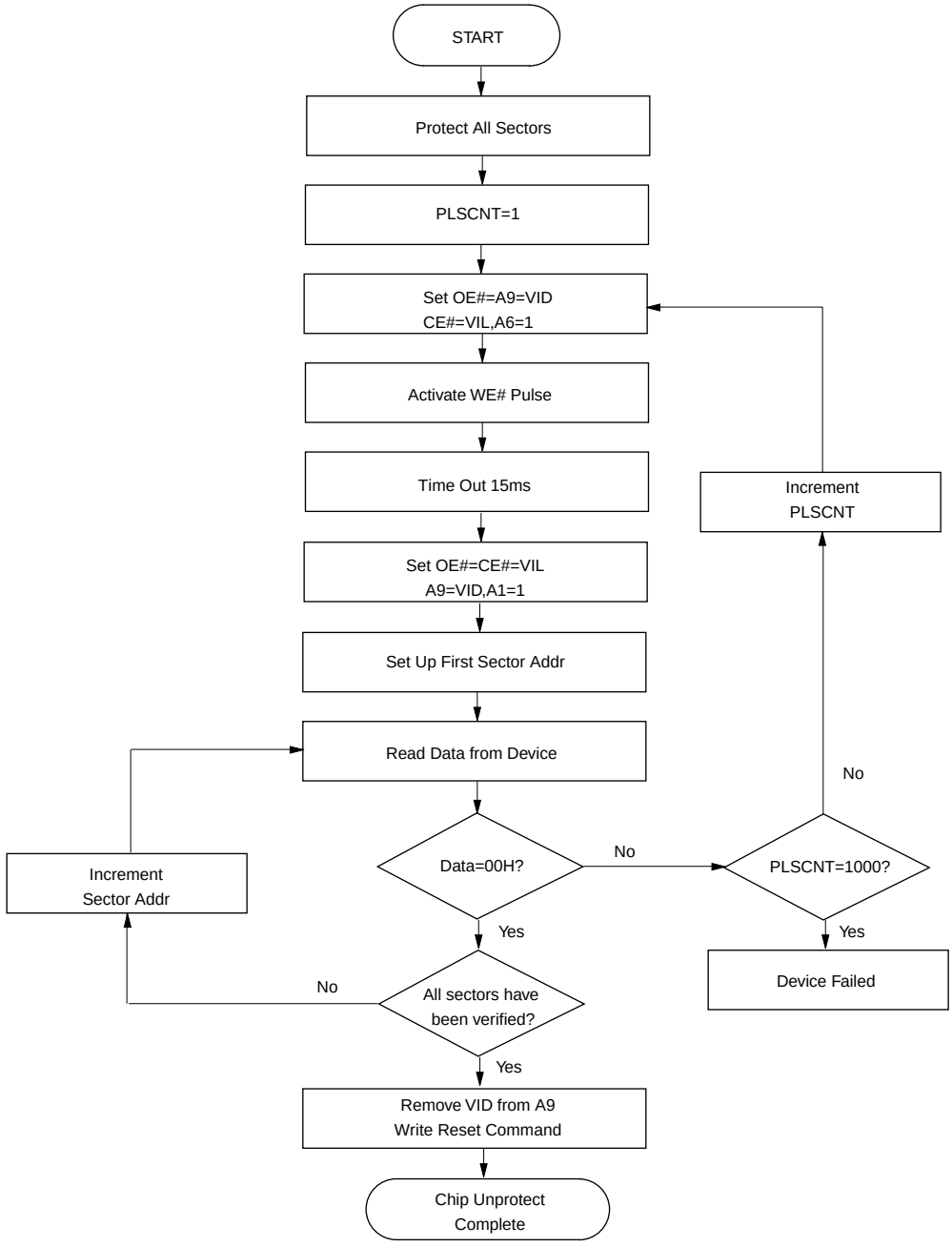

* It is recommended before unprotect whole chip, all sectors should be protected in advance.

AC CHARACTERISTICS

Parameter	Description	Test Setup	All Speed Options	Unit
tVIDR	VID Rise and Fall Time (see Note)	Min	500	ns
tRSP	RESET# Setup Time for Temporary Sector Unprotect	Min	4	us
tRRB	RESET# Hold Time from RY/BY# High for Temporary Sector Group Unprotect	Min	4	us

Figure 19. TEMPORARY SECTOR GROUP UNPROTECTED WAVEFORMS

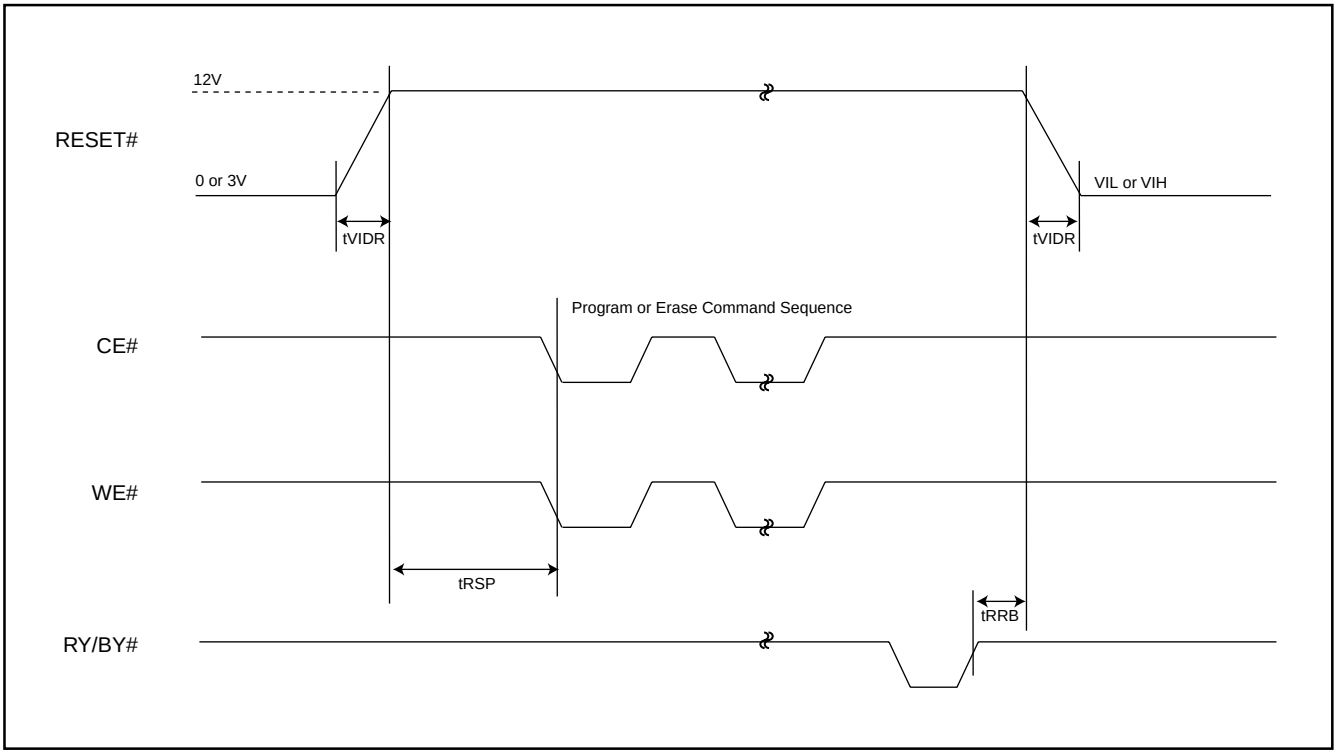

Figure 20. TEMPORARY SECTOR GROUP UNPROTECT FLOWCHART

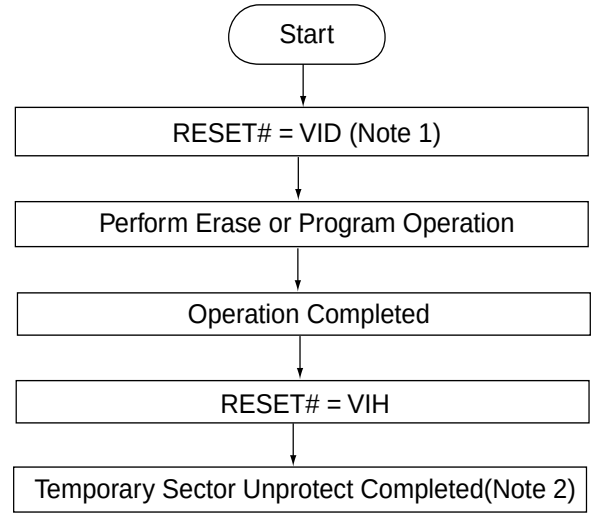

Note : 1. All protected sectors are temporary unprotected.
VID=11.5V~12.5V

2. All previously protected sectors are protected again.

Figure 21. SILICON ID READ TIMING WAVEFORM

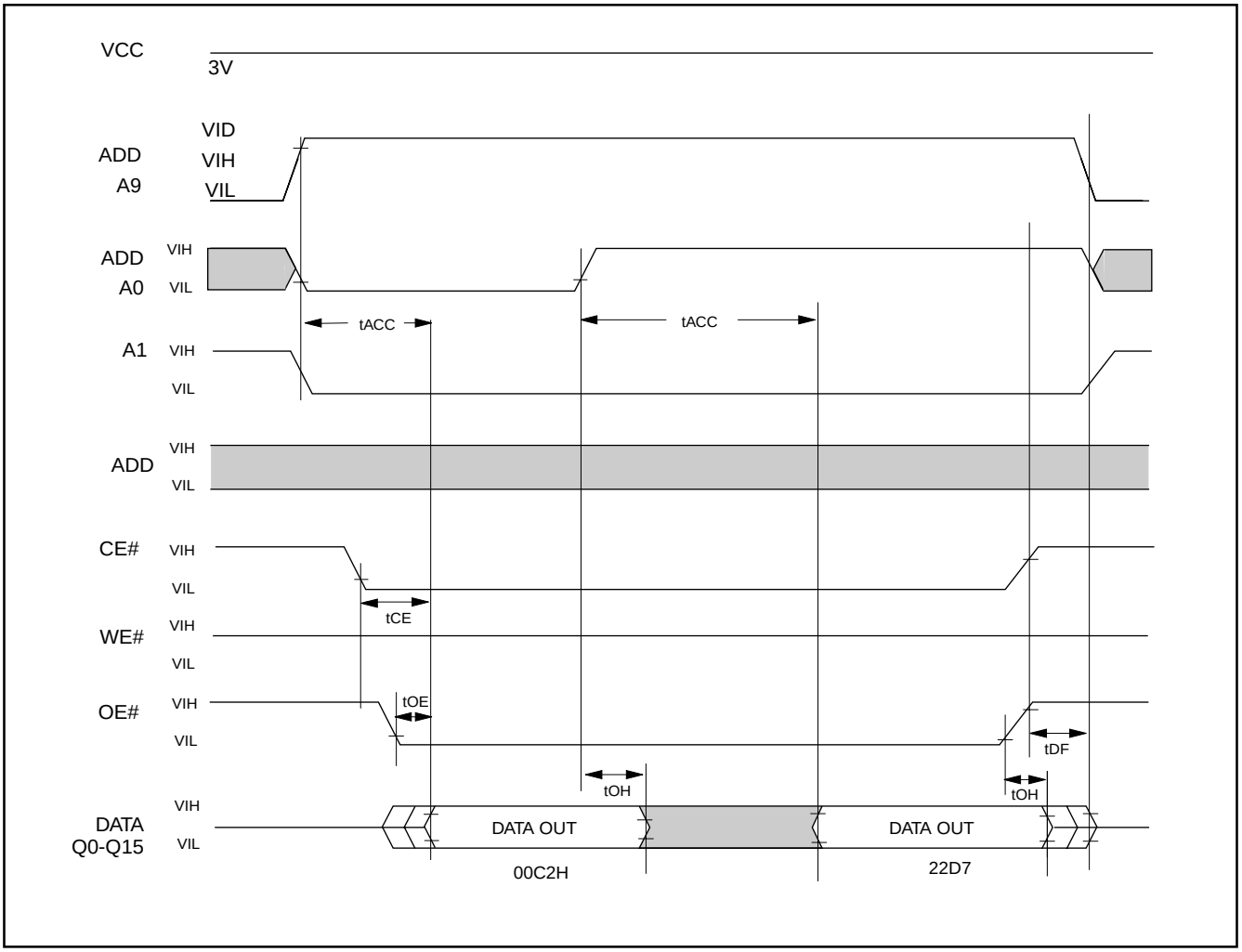

WRITE OPERATION STATUS

Figure 22. DATA# POLLING TIMING WAVEFORMS (DURING AUTOMATIC ALGORITHMS)

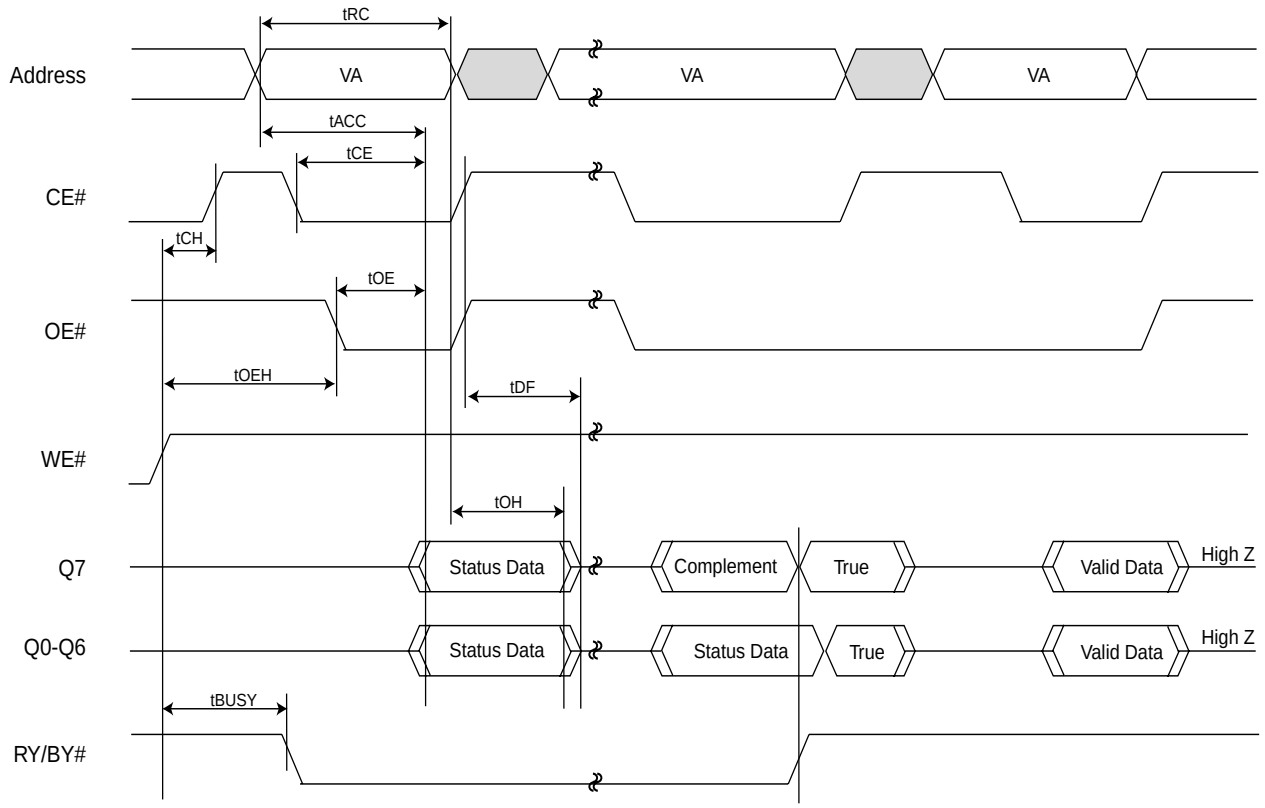

NOTES:

VA=Valid address. Figure shows are first status cycle after command sequence, last status read cycle, and array data raed cycle.

Figure 23. Data# Polling Algorithm

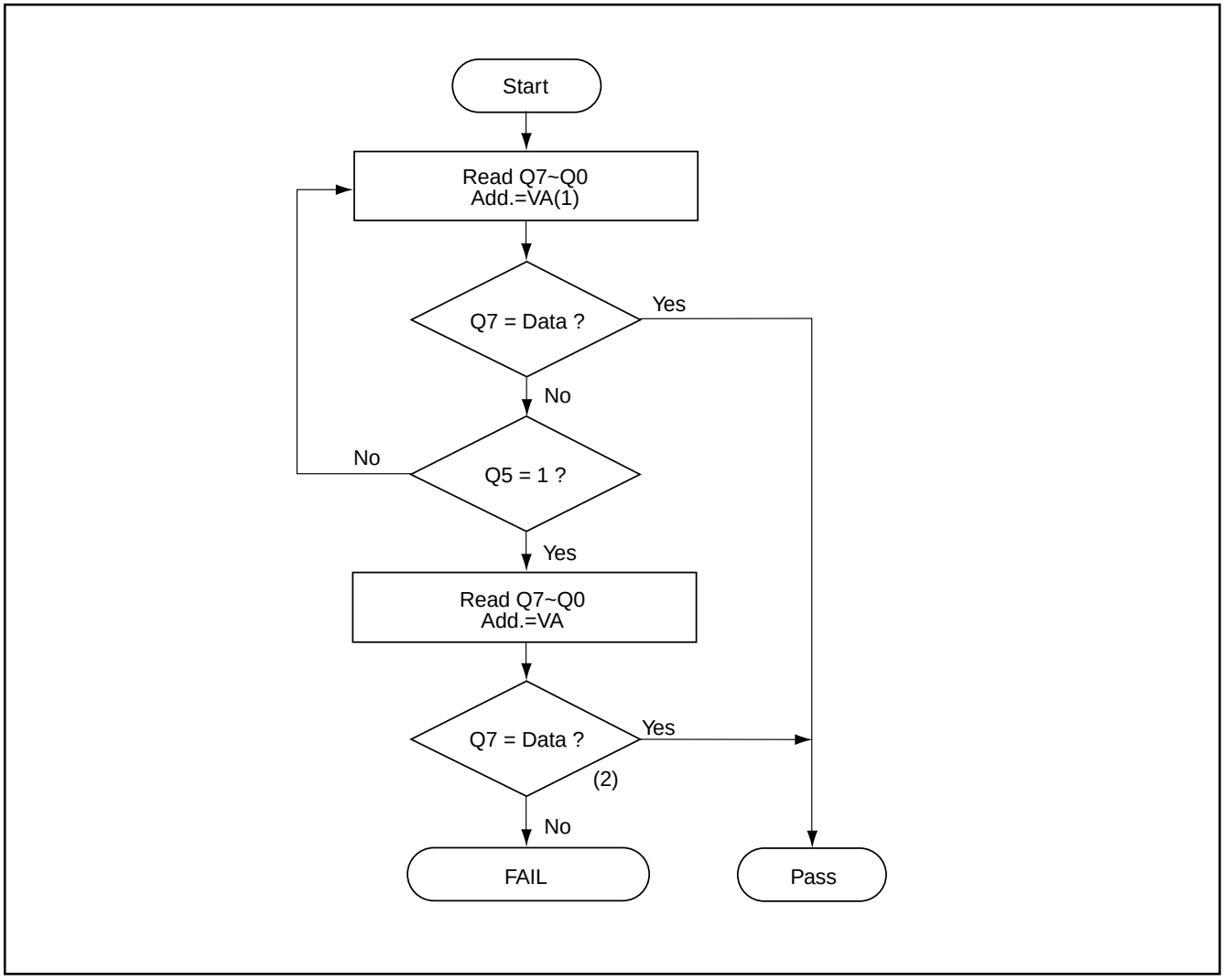

Notes:
1. VA=valid address for programming.
2.Q7 should be rechecked even Q5="1" because Q7 may change simultaneously with Q5.

Figure 24. TOGGLE BIT TIMING WAVEFORMS (DURING AUTOMATIC ALGORITHMS)

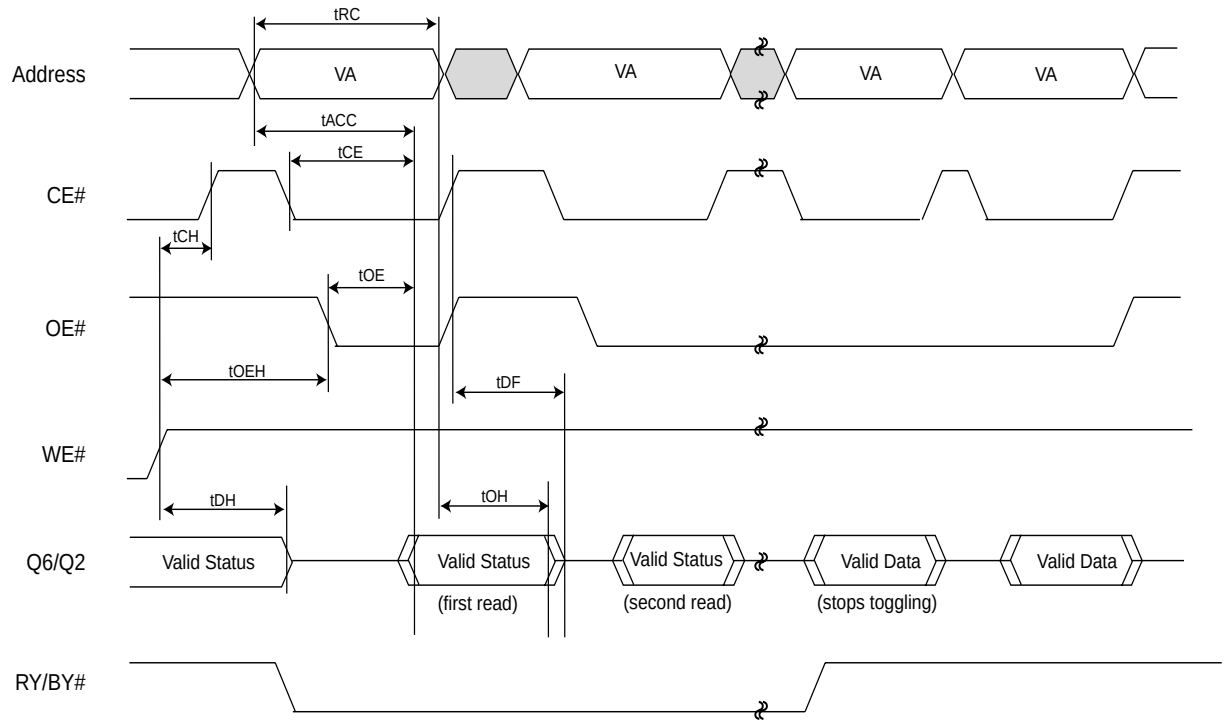

NOTES:

VA=Valid address; not required for Q6. Figure shows first two status cycle after command sequence, last status read cycle, and array data read cycle.

Figure 25. Toggle Bit Algorithm

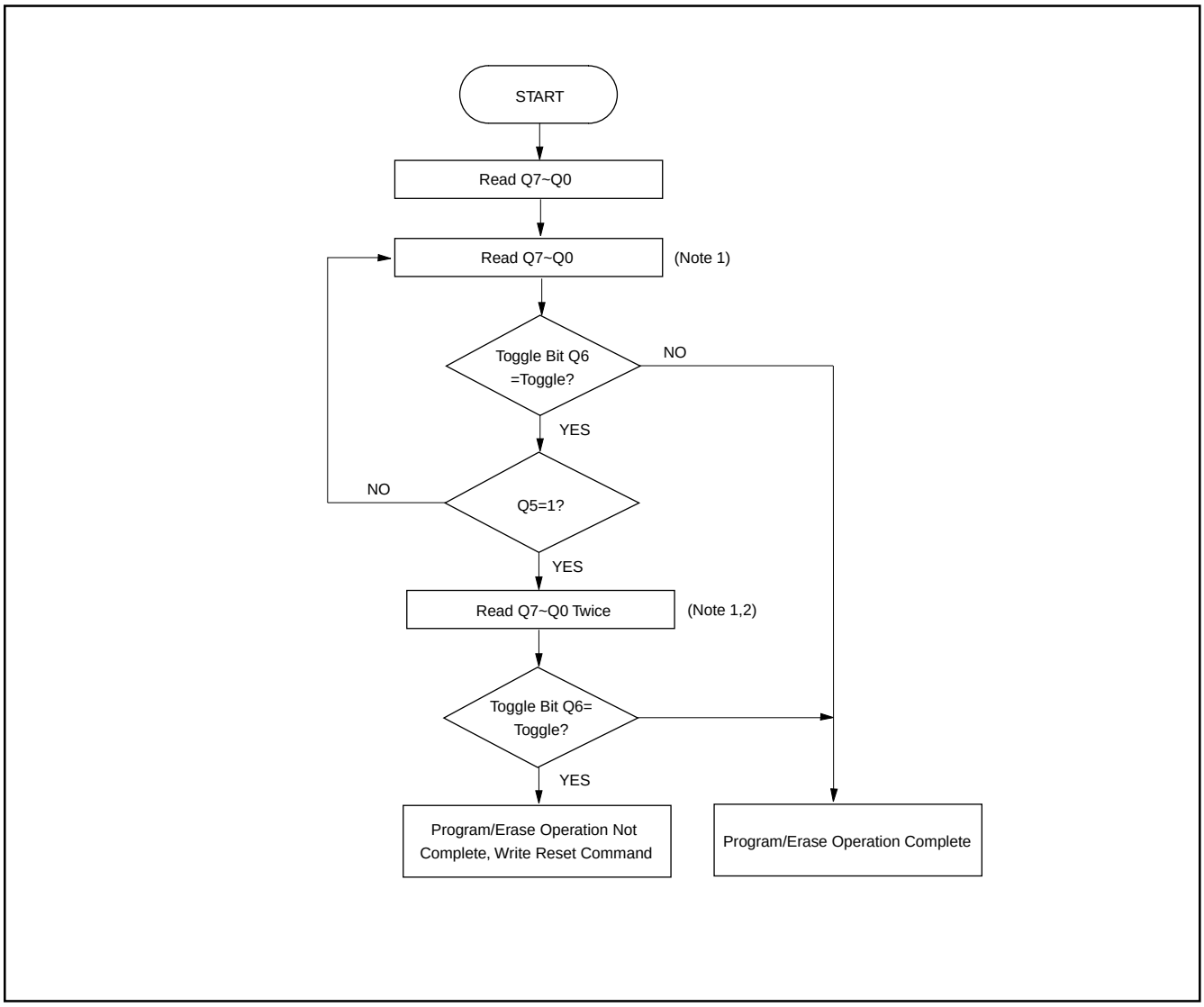

Note:
1. Read toggle bit twice to determine whether or not it is toggling.
2. Recheck toggle bit because it may stop toggling as Q5 changes to "1".

Figure 26. Q6 versus Q2

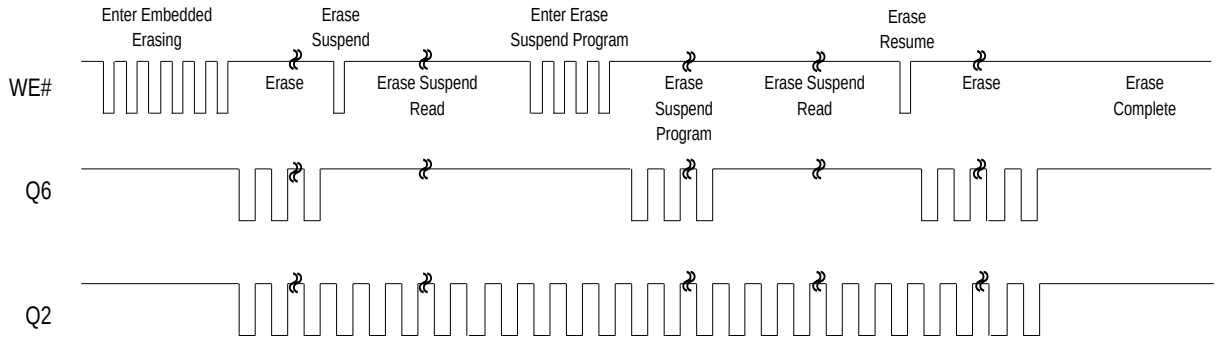

NOTES:

The system can use OE# or CE# to toggle Q2/Q6, Q2 toggles only when read at an address within an erase-suspended

ERASE AND PROGRAMMING PERFORMANCE (1)

PARAMETER	LIMITS			UNITS
	MIN.	TYP.(2)	MAX.	
Sector Erase Time		0.9	15	sec
Chip Erase Time		45	65	sec
Word Programming Time		11	300	us
Accelerated Word Program Time		7	210	us
Chip Programming Time		45	140	sec
Erase/Program Cycles	100,000			Cycles

Note: 1. Not 100% Tested, Excludes external system level over head.
2. Typical program and erase times assume the following condition= 25° C,3.0V VCC. Additionally, programming typicals assume checkerboard pattern.

LATCH-UP CHARACTERISTICS

	MIN.	MAX.
Input Voltage with respect to GND on all pins except I/O pins	-1.0V	13.5V
Input Voltage with respect to GND on all I/O pins	-1.0V	Vcc + 1.0V
Current	-100mA	+100mA
Includes all pins except Vcc. Test conditions: Vcc = 3.0V, one pin at a time.		

TSOP PIN CAPACITANCE

Parameter Symbol	Parameter Description	Test Set	TYP	MAX	UNIT
CIN	Input Capacitance	VIN=0	6	7.5	pF
COUT	Output Capacitance	VOUT=0	8.5	12	pF
CIN2	Control Pin Capacitance	VIN=0	7.5	9	pF

Notes:
1. Sampled, not 100% tested.
2. Test conditions TA=25° C, f=1.0MHz

DATA RETENTION

Parameter	Test Conditions	Min	Unit
Minimum Pattern Data Retention Time	150	10	Years
	125	20	Years

ORDERING INFORMATION

PLASTIC PACKAGE

PART NO.	ACCESS TIME (ns)	Ball Pitch/ Ball size	PACKAGE	Remark
MX29LV640BUTC-90	90		48 Pin TSOP (Normal Type)	Commercial grade
MX29LV640BUTC-12	120		48 Pin TSOP (Normal Type)	Commercial grade
MX29LV640BUTI-90	90		48 Pin TSOP (Normal Type)	Industrial grade
MX29LV640BUTI-12	120		48 Pin TSOP (Normal Type)	Industrial grade
MX29LV640BUXBC-90	90	0.8mm/0.3mm	63 Ball CSP	Commercial grade
MX29LV640BUXBC-12	120	0.8mm/0.3mm	63 Ball CSP	Commercial grade
MX29LV640BUXBI-90	90	0.8mm/0.3mm	63 Ball CSP	Industrial grade
MX29LV640BUXBI-12	120	0.8mm/0.3mm	63 Ball CSP	Industrial grade
MX29LV640BUTC-90G	90		48 Pin TSOP (Normal Type)	Commercial grade Pb-free
MX29LV640BUTC-12G	120		48 Pin TSOP (Normal Type)	Commercial grade Pb-free
MX29LV640BUTI-90G	90		48 Pin TSOP (Normal Type)	Industrial grade Pb-free
MX29LV640BUTI-12G	120		48 Pin TSOP (Normal Type)	Industrial grade Pb-free
MX29LV640BUXBC-90G	90	0.8mm/0.3mm	63 Ball CSP	Commercial grade Pb-free
MX29LV640BUXBC-12G	120	0.8mm/0.3mm	63 Ball CSP	Commercial grade Pb-free
MX29LV640BUXBI-90G	90	0.8mm/0.3mm	63 Ball CSP	Industrial grade Pb-free
MX29LV640BUXBI-12G	120	0.8mm/0.3mm	63 Ball CSP	Industrial grade Pb-free

PACKAGE INFORMATION

Title: Package Outline for TSOP(I) 48L (12X20mm)NORMAL FORM

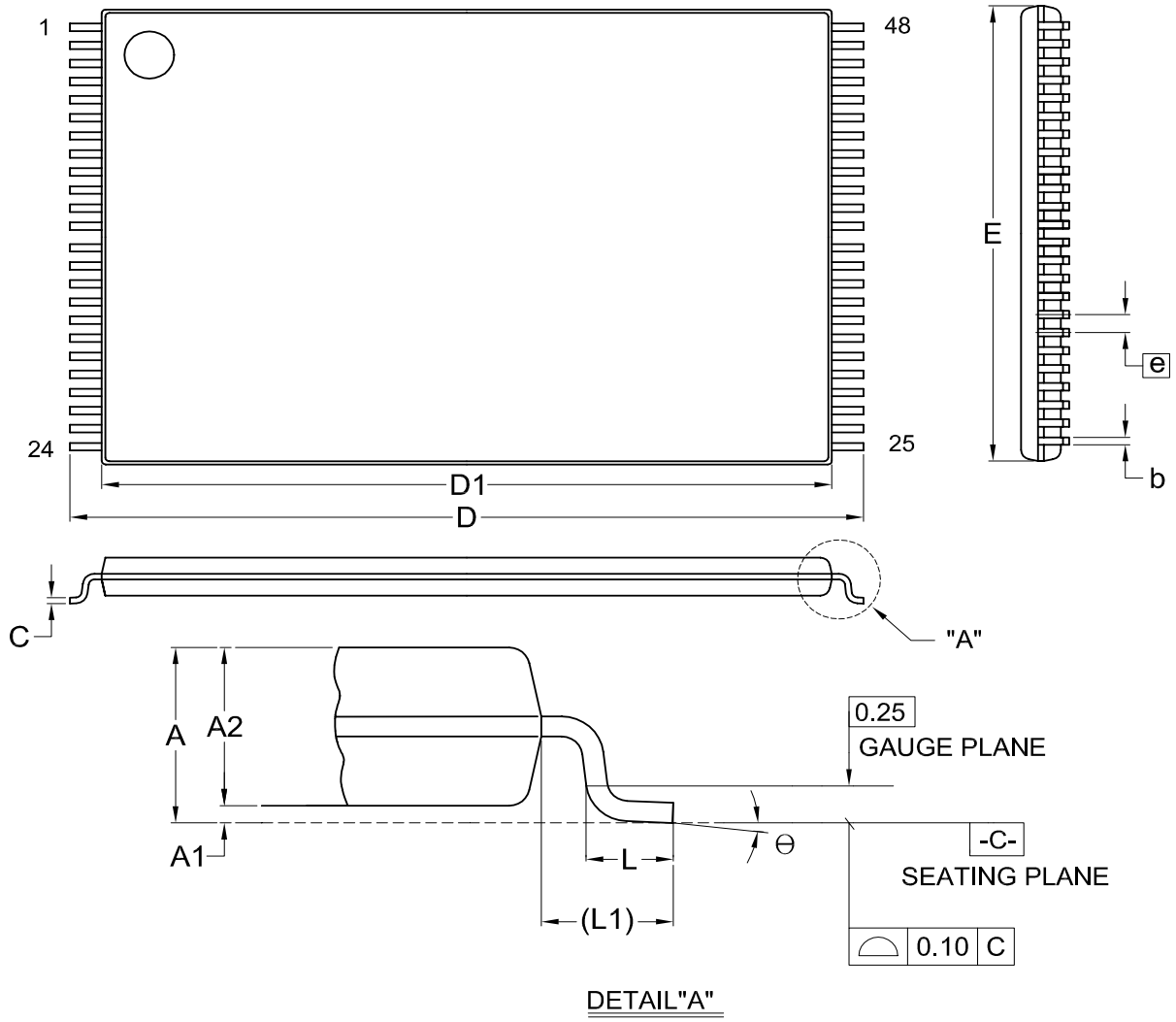

Dimensions (inch dimensions are derived from the original mm dimensions)

SYMBOL / UNIT		A	A1	A2	b	C	D	D1	E	e	L	L1	Θ
mm	Min.	---	0.05	0.95	0.17	0.10	19.80	18.30	11.90		0.50	0.70	0
	Nom.	---	0.10	1.00	0.20	0.13	20.00	18.40	12.00	0.50	0.60	0.80	5
	Max.	1.20	0.15	1.05	0.27	0.21	20.20	18.50	12.10		0.70	0.90	8
Inch	Min.	---	0.002	0.037	0.007	0.004	0.780	0.720	0.469		0.020	0.028	0
	Nom.	---	0.004	0.039	0.008	0.005	0.787	0.724	0.472	0.020	0.024	0.031	5
	Max.	0.047	0.006	0.041	0.011	0.008	0.795	0.728	0.476		0.028	0.035	8

DWG.NO.	REVISION	REFERENCE			ISSUE DATE
		JEDEC	EIAJ		
6110-1607	7	MO-142			12-01-'03

Title: **Package Outline for CSP 63BALL(11X12X1.2MM,BALL PITCH 0.8MM,BALL DIAMETER 0.3MM)**

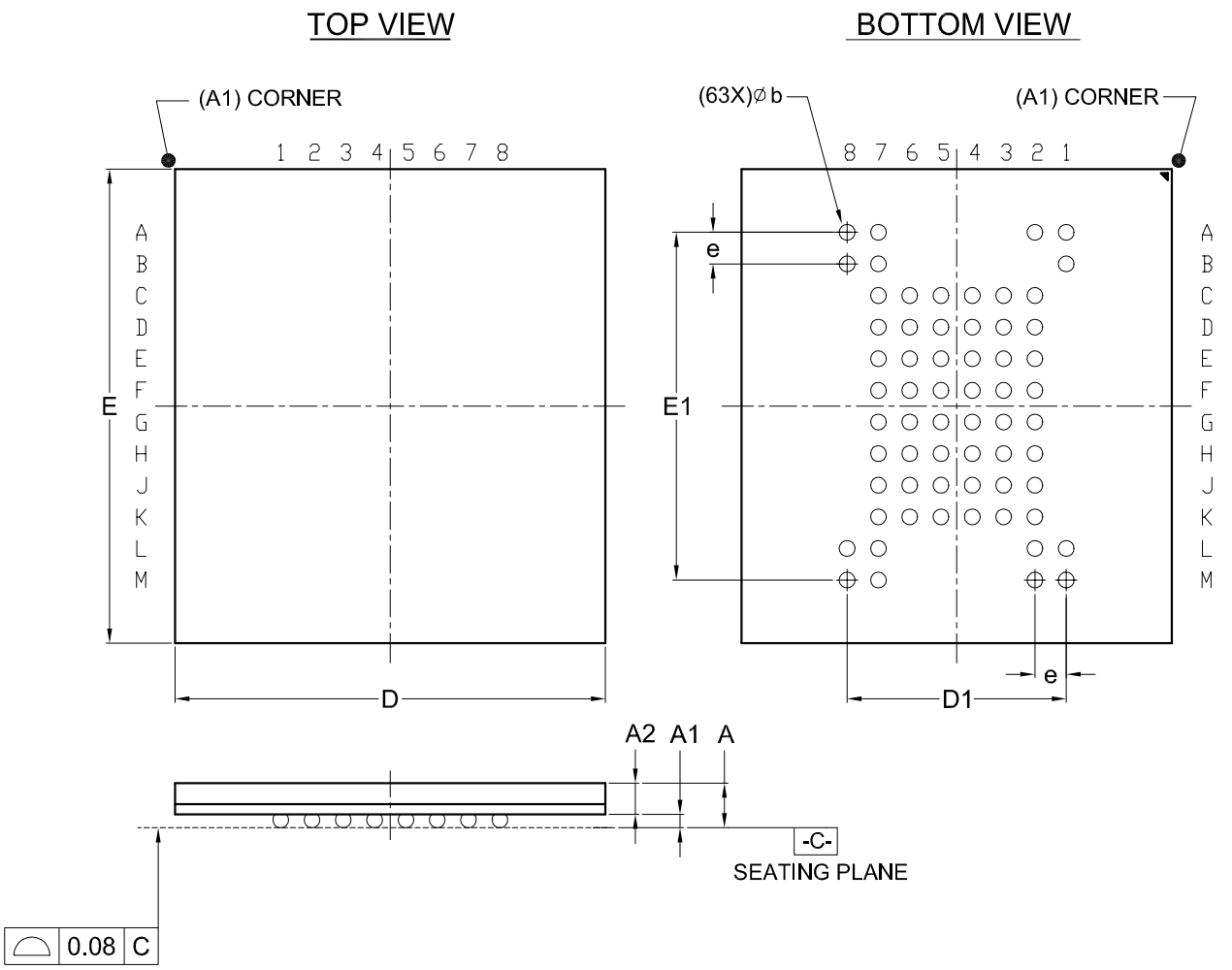

Dimensions (inch dimensions are derived from the original mm dimensions)

SYMBOL / UNIT		A	A1	A2	b	D	D1	E	E1	e
mm	Min.	---	0.18	0.65	0.27	10.90		11.90		
	Nom.	---	0.23	---	0.30	11.00	5.60	12.00	8.80	0.80
	Max.	1.20	0.28	---	0.37	11.10		12.10		
Inch	Min.	---	0.007	0.026	0.011	0.429		0.469		
	Nom.	---	0.009	---	0.012	0.433	0.220	0.472	0.346	0.031
	Max.	0.047	0.011	---	0.015	0.437		0.476		

DWG.NO.	REVISION	REFERENCE			ISSUE DATE
		JEDEC	EIAJ		
6110-4226	4	MO-210			12-16-'03

REVISION HISTORY

Revision No.	Description	Page	Date
1.0	1. Removed "Preliminary"	P1	MAR/08/2005

MACRONIX INTERNATIONAL CO., LTD.

Headquarters:
TEL:+886-3-578-6688
FAX:+886-3-563-2888

Europe Office :
TEL:+32-2-456-8020
FAX:+32-2-456-8021

Hong Kong Office :
TEL:+86-755-834-335-79
FAX:+86-755-834-380-78

Japan Office :
Kawasaki Office :
TEL:+81-44-246-9100
FAX:+81-44-246-9105
Osaka Office :
TEL:+81-6-4807-5460
FAX:+81-6-4807-5461

Singapore Office :
TEL:+65-6346-5505
FAX:+65-6348-8096

Taipei Office :
TEL:+886-2-2509-3300
FAX:+886-2-2509-2200

MACRONIX AMERICA, INC.
TEL:+1-408-262-8887
FAX:+1-408-262-8810

http : //www.macronix.com

MACRONIX INTERNATIONAL CO., LTD. reserves the right to change product and specifications without notice.