# MX29LV160C T/B

## 16M-BIT [2Mx8/1Mx16] CMOS SINGLE VOLTAGE 3V ONLY FLASH MEMORY

## FEATURES

- Extended single - supply voltage range 2.7V to 3.6V
- 2,097,152 x 8/1,048,576 x 16 switchable
- Single power supply operation
  - 3.0V only operation for read, erase and program operation
- **Fully compatible with MX29LV160B device**
- Fast access time: 55R/70/90ns
- Low power consumption
  - 30mA maximum active current
  - 0.2uA typical standby current
- Command register architecture
  - Byte/word Programming (9us/11us typical)
  - Sector Erase (Sector structure 16K-Bytex1, 8K-Bytex2, 32K-Bytex1, and 64K-Byte x31)
- Auto Erase (chip & sector) and Auto Program
  - Automatically erase any combination of sectors with Erase Suspend capability.
  - Automatically program and verify data at specified address
- Erase Suspend/Erase Resume
  - Suspends sector erase operation to read data from, or program data to, any sector that is not being erased, then resumes the erase.
- Status Reply
  - Data# Polling & Toggle bit for detection of program and erase operation completion.
- Ready/Busy# pin (RY/BY#)
  - Provides a hardware method of detecting program or erase operation completion.
- Sector protection
  - Hardware method to disable any combination of sectors from program or erase operations
  - Temporary sector unprotect allows code changes in previously locked sectors.
- CFI (Common Flash Interface) compliant
  - Flash device parameters stored on the device and provide the host system to access
- 100,000 minimum erase/program cycles
- Latch-up protected to 100mA from -1V to VCC+1V
- Boot Sector Architecture
  - T = Top Boot Sector
  - B = Bottom Boot Sector
- Low VCC write inhibit is equal to or less than 1.4V
- Package type:
  - 44-pin SOP
  - 48-pin TSOP
  - 48-ball CSP
  - **All Pb-free devices are RoHS Compliant**
- Compatibility with JEDEC standard
  - Pinout and software compatible with single-power supply Flash
- 10 years data retention

## GENERAL DESCRIPTION

The MX29LV160C T/B is a 16-mega bit Flash memory organized as 2M bytes of 8 bits or 1M words of 16 bits. MXIC's Flash memories offer the most cost-effective and reliable read/write non-volatile random access memory. The MX29LV160C T/B is packaged in 44-pin SOP, 48-pin TSOP and 48-ball CSP. It is designed to be reprogrammed and erased in system or in standard EPROM programmers.

The standard MX29LV160C T/B offers access time as fast as 55ns, allowing operation of high-speed microprocessors without wait states. To eliminate bus contention, the MX29LV160C T/B has separate chip enable (CE#) and output enable (OE#) controls.

MXIC's Flash memories augment EPROM functionality with in-circuit electrical erasure and programming. The MX29LV160C T/B uses a command register to manage this functionality. The command register allows for 100% TTL level control inputs and fixed power supply levels during erase and programming, while maintaining maximum EPROM compatibility.

MXIC Flash technology reliably stores memory contents even after 100,000 erase and program cycles. The MXIC cell is designed to optimize the erase and programming mechanisms. In addition, the combination of advanced tunnel oxide processing and low internal electric fields for erase and program operations produces reliable cycling. The MX29LV160C T/B uses a 2.7V~3.6V VCC supply to perform the High Reliability Erase and auto Program/Erase algorithms.

The highest degree of latch-up protection is achieved with MXIC's proprietary non-epi process. Latch-up protection is proved for stresses up to 100 milliamps on address and data pin from -1V to VCC + 1V.

## PIN CONFIGURATIONS

### 44 SOP(500 mil)

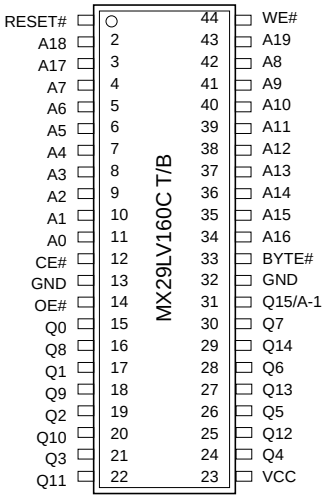


## PIN DESCRIPTION

| SYMBOL | PIN NAME |
|---|---|
| A0~A19 | Address Input |
| Q0~Q14 | Data Input/Output |
| Q15/A-1 | Q15(Word mode)/LSB addr(Byte mode) |
| CE# | Chip Enable Input |
| WE# | Write Enable Input |
| BYTE# | Word/Byte Selection input |
| RESET# | Hardware Reset Pin/Sector Protect Unlock |
| OE# | Output Enable Input |
| RY/BY# | Ready/Busy Output |
| VCC | Power Supply Pin (2.7V~3.6V) |
| GND | Ground Pin |

### 48 TSOP (Standard Type) (12mm x 20mm)

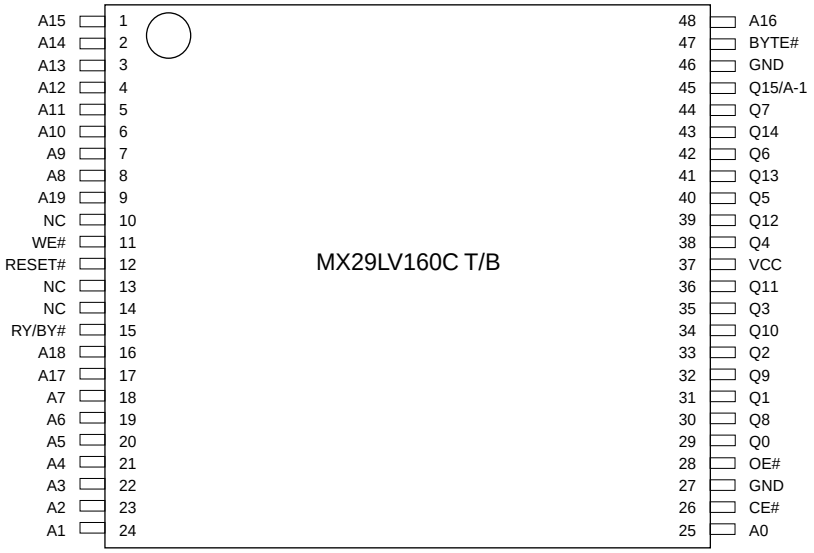


### 48-Ball CSP 6mm x 8mm (Ball Pitch=0.8mm) Top View, Balls Facing Down

| | A | B | C | D | E | F | G | H |
|---|---|---|---|---|---|---|---|---|
| 6 | A13 | A12 | A14 | A15 | A16 | BYTE# | Q15/A-1 | GND |
| 5 | A9 | A8 | A10 | A11 | Q7 | Q14 | Q13 | Q6 |
| 4 | WE# | RESET# | NC | A19 | Q5 | Q12 | VCC | Q4 |
| 3 | RY/BY# | NC | A18 | NC | Q2 | Q10 | Q11 | Q3 |
| 2 | A7 | A17 | A6 | A5 | Q0 | Q8 | Q9 | Q1 |
| 1 | A3 | A4 | A2 | A1 | A0 | CE# | OE# | GND |

## BLOCK STRUCTURE

**Table 1: MX29LV160CT SECTOR ARCHITECTURE**

| Sector | Sector Size | | Address range | | Sector Address | | | | | | | |
|---|---|---|---|---|---|---|---|---|---|---|---|---|
| | Byte Mode | Word Mode | Byte Mode(x8) | Word Mode(x16) | A19 | A18 | A17 | A16 | A15 | A14 | A13 | A12 |
| SA0 | 64Kbytes | 32Kwords | 000000-00FFFF | 00000-07FFF | 0 | 0 | 0 | 0 | 0 | X | X | X |
| SA1 | 64Kbytes | 32Kwords | 010000-01FFFF | 08000-0FFFF | 0 | 0 | 0 | 0 | 1 | X | X | X |
| SA2 | 64Kbytes | 32Kwords | 020000-02FFFF | 10000-17FFF | 0 | 0 | 0 | 1 | 0 | X | X | X |
| SA3 | 64Kbytes | 32Kwords | 030000-03FFFF | 18000-1FFFF | 0 | 0 | 0 | 1 | 1 | X | X | X |
| SA4 | 64Kbytes | 32Kwords | 040000-04FFFF | 20000-27FFF | 0 | 0 | 1 | 0 | 0 | X | X | X |
| SA5 | 64Kbytes | 32Kwords | 050000-05FFFF | 28000-2FFFF | 0 | 0 | 1 | 0 | 1 | X | X | X |
| SA6 | 64Kbytes | 32Kwords | 060000-06FFFF | 30000-37FFF | 0 | 0 | 1 | 1 | 0 | X | X | X |
| SA7 | 64Kbytes | 32Kwords | 070000-07FFFF | 38000-3FFFF | 0 | 0 | 1 | 1 | 1 | X | X | X |
| SA8 | 64Kbytes | 32Kwords | 080000-08FFFF | 40000-47FFF | 0 | 1 | 0 | 0 | 0 | X | X | X |
| SA9 | 64Kbytes | 32Kwords | 090000-09FFFF | 48000-4FFFF | 0 | 1 | 0 | 0 | 1 | X | X | X |
| SA10 | 64Kbytes | 32Kwords | 0A0000-0AFFFF | 50000-57FFF | 0 | 1 | 0 | 1 | 0 | X | X | X |
| SA11 | 64Kbytes | 32Kwords | 0B0000-0BFFFF | 58000-5FFFF | 0 | 1 | 0 | 1 | 1 | X | X | X |
| SA12 | 64Kbytes | 32Kwords | 0C0000-0CFFFF | 60000-67FFF | 0 | 1 | 1 | 0 | 0 | X | X | X |
| SA13 | 64Kbytes | 32Kwords | 0D0000-0DFFFF | 68000-6FFFF | 0 | 1 | 1 | 0 | 1 | X | X | X |
| SA14 | 64Kbytes | 32Kwords | 0E0000-0EFFFF | 70000-77FFF | 0 | 1 | 1 | 1 | 0 | X | X | X |
| SA15 | 64Kbytes | 32Kwords | 0F0000-0FFFFF | 78000-7FFFF | 0 | 1 | 1 | 1 | 1 | X | X | X |
| SA16 | 64Kbytes | 32Kwords | 100000-10FFFF | 80000-87FFF | 1 | 0 | 0 | 0 | 0 | X | X | X |
| SA17 | 64Kbytes | 32Kwords | 110000-11FFFF | 88000-8FFFF | 1 | 0 | 0 | 0 | 1 | X | X | X |
| SA18 | 64Kbytes | 32Kwords | 120000-12FFFF | 90000-97FFF | 1 | 0 | 0 | 1 | 0 | X | X | X |
| SA19 | 64Kbytes | 32Kwords | 130000-13FFFF | 98000-9FFFF | 1 | 0 | 0 | 1 | 1 | X | X | X |
| SA20 | 64Kbytes | 32Kwords | 140000-14FFFF | A0000-A7FFF | 1 | 0 | 1 | 0 | 0 | X | X | X |
| SA21 | 64Kbytes | 32Kwords | 150000-15FFFF | A8000-AFFFF | 1 | 0 | 1 | 0 | 1 | X | X | X |
| SA22 | 64Kbytes | 32Kwords | 160000-16FFFF | B0000-B7FFF | 1 | 0 | 1 | 1 | 0 | X | X | X |
| SA23 | 64Kbytes | 32Kwords | 170000-17FFFF | B8000-BFFFF | 1 | 0 | 1 | 1 | 1 | X | X | X |
| SA24 | 64Kbytes | 32Kwords | 180000-18FFFF | C0000-C7FFF | 1 | 1 | 0 | 0 | 0 | X | X | X |
| SA25 | 64Kbytes | 32Kwords | 190000-19FFFF | C8000-CFFFF | 1 | 1 | 0 | 0 | 1 | X | X | X |
| SA26 | 64Kbytes | 32Kwords | 1A0000-1AFFFF | D0000-D7FFF | 1 | 1 | 0 | 1 | 0 | X | X | X |
| SA27 | 64Kbytes | 32Kwords | 1B0000-1BFFFF | D8000-DFFFF | 1 | 1 | 0 | 1 | 1 | X | X | X |
| SA28 | 64Kbytes | 32Kwords | 1C0000-1CFFFF | E0000-E7FFF | 1 | 1 | 1 | 0 | 0 | X | X | X |
| SA29 | 64Kbytes | 32Kwords | 1D0000-1DFFFF | E8000-EFFFF | 1 | 1 | 1 | 0 | 1 | X | X | X |
| SA30 | 64Kbytes | 32Kwords | 1E0000-1EFFFF | F0000-F7FFF | 1 | 1 | 1 | 1 | 0 | X | X | X |
| SA31 | 32Kbytes | 16Kwords | 1F0000-1F7FFF | F8000-FBFFF | 1 | 1 | 1 | 1 | 1 | 0 | X | X |
| SA32 | 8Kbytes | 4Kwords | 1F8000-1F9FFF | FC000-FCFFF | 1 | 1 | 1 | 1 | 1 | 1 | 0 | 0 |
| SA33 | 8Kbytes | 4Kwords | 1FA000-1FBFFF | FD000-FDFFF | 1 | 1 | 1 | 1 | 1 | 1 | 0 | 1 |
| SA34 | 16Kbytes | 8Kwords | 1FC000-1FFFFF | FE000-FFFFF | 1 | 1 | 1 | 1 | 1 | 1 | 1 | X |

Note: Byte mode: address range A19:A-1, word mode:address range A19:A0.

**Table 2: MX29LV160CB SECTOR ARCHITECTURE**

| Sector | Sector Size | | Address range | | Sector Address | | | | | | | |
|---|---|---|---|---|---|---|---|---|---|---|---|---|
| | Byte Mode | Word Mode | Byte Mode (x8) | Word Mode (x16) | A19 | A18 | A17 | A16 | A15 | A14 | A13 | A12 |
| SA0 | 16Kbytes | 8Kwords | 000000-003FFF | 00000-01FFF | 0 | 0 | 0 | 0 | 0 | 0 | 0 | X |
| SA1 | 8Kbytes | 4Kwords | 004000-005FFF | 02000-02FFF | 0 | 0 | 0 | 0 | 0 | 0 | 1 | 0 |
| SA2 | 8Kbytes | 4Kwords | 006000-007FFF | 03000-03FFF | 0 | 0 | 0 | 0 | 0 | 0 | 1 | 1 |
| SA3 | 32Kbytes | 16Kwords | 008000-00FFFF | 04000-07FFF | 0 | 0 | 0 | 0 | 0 | 1 | X | X |
| SA4 | 64Kbytes | 32Kwords | 010000-01FFFF | 08000-0FFFF | 0 | 0 | 0 | 0 | 1 | X | X | X |
| SA5 | 64Kbytes | 32Kwords | 020000-02FFFF | 10000-17FFF | 0 | 0 | 0 | 1 | 0 | X | X | X |
| SA6 | 64Kbytes | 32Kwords | 030000-03FFFF | 18000-1FFFF | 0 | 0 | 0 | 1 | 1 | X | X | X |
| SA7 | 64Kbytes | 32Kwords | 040000-04FFFF | 20000-27FFF | 0 | 0 | 1 | 0 | 0 | X | X | X |
| SA8 | 64Kbytes | 32Kwords | 050000-05FFFF | 28000-2FFFF | 0 | 0 | 1 | 0 | 1 | X | X | X |
| SA9 | 64Kbytes | 32Kwords | 060000-06FFFF | 30000-37FFF | 0 | 0 | 1 | 1 | 0 | X | X | X |
| SA10 | 64Kbytes | 32Kwords | 070000-07FFFF | 38000-3FFFF | 0 | 0 | 1 | 1 | 1 | X | X | X |
| SA11 | 64Kbytes | 32Kwords | 080000-08FFFF | 40000-47FFF | 0 | 1 | 0 | 0 | 0 | X | X | X |
| SA12 | 64Kbytes | 32Kwords | 090000-09FFFF | 48000-4FFFF | 0 | 1 | 0 | 0 | 1 | X | X | X |
| SA13 | 64Kbytes | 32Kwords | 0A0000-0AFFFF | 50000-57FFF | 0 | 1 | 0 | 1 | 0 | X | X | X |
| SA14 | 64Kbytes | 32Kwords | 0B0000-0BFFFF | 58000-5FFFF | 0 | 1 | 0 | 1 | 1 | X | X | X |
| SA15 | 64Kbytes | 32Kwords | 0C0000-0CFFFF | 60000-67FFF | 0 | 1 | 1 | 0 | 0 | X | X | X |
| SA16 | 64Kbytes | 32Kwords | 0D0000-0DFFFF | 68000-6FFFF | 0 | 1 | 1 | 0 | 1 | X | X | X |
| SA17 | 64Kbytes | 32Kwords | 0E0000-0EFFFF | 70000-77FFF | 0 | 1 | 1 | 1 | 0 | X | X | X |
| SA18 | 64Kbytes | 32Kwords | 0F0000-0FFFFF | 78000-7FFFF | 0 | 1 | 1 | 1 | 1 | X | X | X |
| SA19 | 64Kbytes | 32Kwords | 100000-10FFFF | 80000-87FFF | 1 | 0 | 0 | 0 | 0 | X | X | X |
| SA20 | 64Kbytes | 32Kwords | 110000-11FFFF | 88000-8FFFF | 1 | 0 | 0 | 0 | 1 | X | X | X |
| SA21 | 64Kbytes | 32Kwords | 120000-12FFFF | 90000-97FFF | 1 | 0 | 0 | 1 | 0 | X | X | X |
| SA22 | 64Kbytes | 32Kwords | 130000-13FFFF | 98000-9FFFF | 1 | 0 | 0 | 1 | 1 | X | X | X |
| SA23 | 64Kbytes | 32Kwords | 140000-14FFFF | A0000-A7FFF | 1 | 0 | 1 | 0 | 0 | X | X | X |
| SA24 | 64Kbytes | 32Kwords | 150000-15FFFF | A8000-AFFFF | 1 | 0 | 1 | 0 | 1 | X | X | X |
| SA25 | 64Kbytes | 32Kwords | 160000-16FFFF | B0000-B7FFF | 1 | 0 | 1 | 1 | 0 | X | X | X |
| SA26 | 64Kbytes | 32Kwords | 170000-17FFFF | B8000-BFFFF | 1 | 0 | 1 | 1 | 1 | X | X | X |
| SA27 | 64Kbytes | 32Kwords | 180000-18FFFF | C0000-C7FFF | 1 | 1 | 0 | 0 | 0 | X | X | X |
| SA28 | 64Kbytes | 32Kwords | 190000-19FFFF | C8000-CFFFF | 1 | 1 | 0 | 0 | 1 | X | X | X |
| SA29 | 64Kbytes | 32Kwords | 1A0000-1AFFFF | D0000-D7FFF | 1 | 1 | 0 | 1 | 0 | X | X | X |
| SA30 | 64Kbytes | 32Kwords | 1B0000-1BFFFF | D8000-DFFFF | 1 | 1 | 0 | 1 | 1 | X | X | X |
| SA31 | 64Kbytes | 32Kwords | 1C0000-1CFFFF | E0000-E7FFF | 1 | 1 | 1 | 0 | 0 | X | X | X |
| SA32 | 64Kbytes | 32Kwords | 1D0000-1DFFFF | E8000-EFFFF | 1 | 1 | 1 | 0 | 1 | X | X | X |
| SA33 | 64Kbytes | 32Kwords | 1E0000-1EFFFF | F0000-FFFFF | 1 | 1 | 1 | 1 | 0 | X | X | X |
| SA34 | 64Kbytes | 32Kwords | 1F0000-1FFFFF | F8000-FFFFF | 1 | 1 | 1 | 1 | 1 | X | X | X |

Note: Byte mode:address range A19:A-1, word mode:address range A19:A0.

## BLOCK DIAGRAM

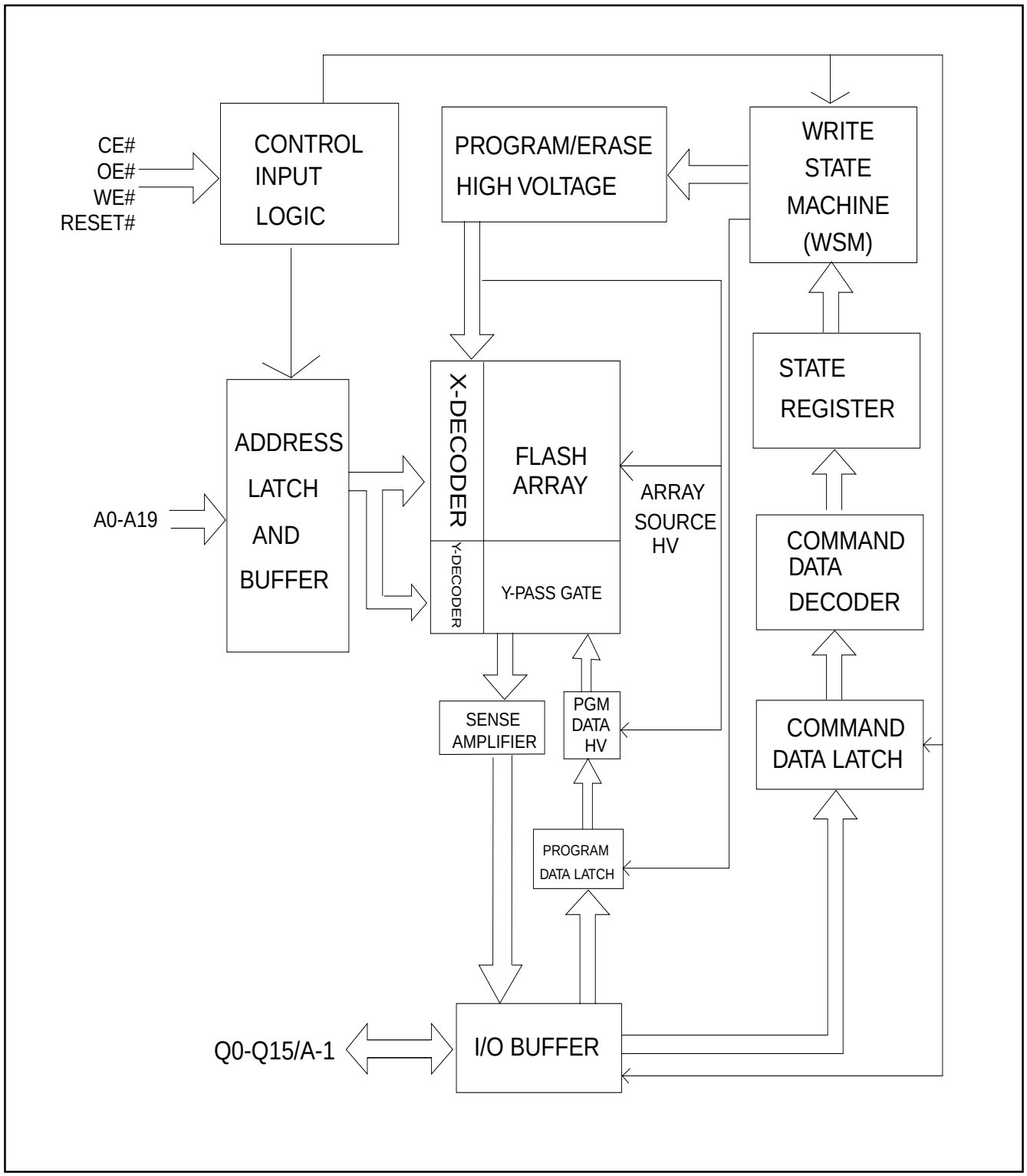

## AUTOMATIC PROGRAMMING

The MX29LV160C T/B is byte/word programmable using the Automatic Programming algorithm. The Automatic Programming algorithm makes the external system do not need to have time out sequence nor to verify the data programmed. The typical chip programming time at room temperature of the MX29LV160C T/B is less than 18 sec (byte)/12 sec (word).

## AUTOMATIC PROGRAMMING ALGORITHM

MXIC's Automatic Programming algorithm requires the user to only write program set-up commands (including 2 unlock write cycle and A0H) and a program command (program data and address). The device automatically times the programming pulse width, provides the program verification, and counts the number of sequences. A status bit similar to Data# Polling and a status bit toggling between consecutive read cycles, provide feedback to the user as to the status of the programming operation. Refer to write operation status, table 7, for more information on these status bits.

## AUTOMATIC CHIP ERASE

The entire chip is bulk erased using 10 ms erase pulses according to MXIC's Automatic Chip Erase algorithm. Typical erasure at room temperature is accomplished in less than 25 second. The Automatic Erase algorithm automatically programs the entire array prior to electrical erase. The timing and verification of electrical erase are controlled internally within the device.

## AUTOMATIC SECTOR ERASE

The MX29LV160C T/B is sector(s) erasable using MXIC's Auto Sector Erase algorithm. The Automatic Sector Erase algorithm automatically programs the specified sector(s) prior to electrical erase. The timing and verification of electrical erase are controlled internally within the device. An erase operation can erase one sector, multiple sectors, or the entire device.

## AUTOMATIC ERASE ALGORITHM

MXIC's Automatic Erase algorithm requires the user to write commands to the command register using standard microprocessor write timings. The device will automatically pre-program and verify the entire array. Then the device automatically times the erase pulse width, provides the erase verification, and counts the number of sequences. A status bit toggling between consecutive read cycles provides feedback to the user as to the status of the erasing operation.

Register contents serve as inputs to an internal state-machine which controls the erase and programming circuitry. During write cycles, the command register internally latches address and data needed for the programming and erase operations. During a system write cycle, addresses are latched on the falling edge, and data are latched on the rising edge of WE# or CE#, whichever happens first.

MXIC's Flash technology combines years of EPROM experience to produce the highest levels of quality, reliability, and cost effectiveness. The MX29LV160C T/B electrically erases all bits simultaneously using Fowler-Nordheim tunneling. The bytes are programmed by using the EPROM programming mechanism of hot electron injection.

During a program cycle, the state-machine will control the program sequences and command register will not respond to any command set. During a Sector Erase cycle, the command register will only respond to Erase Suspend command. After Erase Suspend is completed, the device stays in read mode. After the state machine has completed its task, it will allow the command register to respond to its full command set.

## AUTOMATIC SELECT

The automatic select mode provides manufacturer and device identification, and sector protection verification, through identifier codes output on Q7~Q0. This mode is mainly adapted for programming equipment on the device to be programmed with its programming algorithm. When programming by high voltage method, automatic select mode requires VID (11.5V to 12.5V) on address pin A9. Other address pin A6, A1 and A0 as referring to Table 3. In addition, to access the automatic select codes in-system, the host can issue the automatic select command through the command register without requiring VID, as shown in table 5.

To verify whether or not sector being protected, the sector address must appear on the appropriate highest order

address bit (see Table 1 and Table 2). The rest of address bits, as shown in Table 3, are don't care. Once all necessary bits have been set as required, the programming equipment may read the corresponding identifier code on Q7~Q0.

**TABLE 3. MX29LV160C T/B AUTO SELECT MODE BUS OPERATION (A9=VID)**

| Description | Mode | CE# | OE# | WE# | RESET# | A19 \| A12 | A11 \| A10 | A9 | A8 \| A7 | A6 | A5 \| A2 | A1 | A0 | Q15~Q0 |
|---|---|---|---|---|---|---|---|---|---|---|---|---|---|---|
| Read Silicon ID Manufacture Code | | L | L | H | H | X | X | VID | X | L | X | L | L | C2H |
| Device ID (Top Boot Block) | Word | L | L | H | H | X | X | VID | X | L | X | L | H | 22C4H |
| | Byte | L | L | H | H | X | X | VID | X | L | X | L | H | XXC4H |
| Device ID (Bottom Boot Block) | Word | L | L | H | H | X | X | VID | X | L | X | L | H | 2249H |
| | Byte | L | L | H | H | X | X | VID | X | L | X | L | H | XX49H |
| Sector Protection Verification | | L | L | H | H | SA | X | VID | X | L | X | H | L | XX01H (protected) |
| | | | | | | | | | | | | | | XX00H (unprotected) |

NOTE: SA=Sector Address, X=Don't Care, L=Logic Low, H=Logic High

## QUERY COMMAND AND COMMON FLASH INTERFACE (CFI) MODE

MX29LV160C T/B is capable of operating in the CFI mode. This mode all the host system to determine the manufacturer of the device such as operating parameters and configuration. Two commands are required in CFI mode. Query command of CFI mode is placed first, then the Reset command exits CFI mode. These are described in Table 4.

The single cycle Query command is valid only when the device is in the Read mode, including Erase Suspend, Standby mode, and Automatic Select mode; however, it is ignored otherwise.

The Reset command exits from the CFI mode to the Read mode, or Erase Suspend mode, or Automatic Select mode. The command is valid only when the device is in the CFI mode.

**Table 4-1. CFI mode: Identification Data Values**
(All values in these tables are in hexadecimal)

| Description | Address (Byte Mode) | Address (Word Mode) | Data |
|---|---|---|---|
| Query-unique ASCII string "QRY" | 20 | 10 | 0051 |
| | 22 | 11 | 0052 |
| | 24 | 12 | 0059 |
| Primary vendor command set and control interface ID code | 26 | 13 | 0002 |
| | 28 | 14 | 0000 |
| Address for primary algorithm extended query table | 2A | 15 | 0040 |
| | 2C | 16 | 0000 |
| Alternate vendor command set and control interface ID code (none) | 2E | 17 | 0000 |
| | 30 | 18 | 0000 |
| Address for secondary algorithm extended query table (none) | 32 | 19 | 0000 |
| | 34 | 1A | 0000 |

**Table 4-2. CFI Mode: System Interface Data Values**
(All values in these tables are in hexadecimal)

| Description | Address (Byte Mode) | Address (Word Mode) | Data |
|---|---|---|---|
| VCC supply, minimum (2.7V) | 36 | 1B | 0027 |
| VCC supply, maximum (3.6V) | 38 | 1C | 0036 |
| VPP supply, minimum (none) | 3A | 1D | 0000 |
| VPP supply, maximum (none) | 3C | 1E | 0000 |
| Typical timeout for single word/byte write ($2^N$ us) | 3E | 1F | 0004 |
| Typical timeout for Minimum size buffer write ($2^N$ us) (not supported) | 40 | 20 | 0000 |
| Typical timeout for individual sector erase ($2^N$ ms) | 42 | 21 | 000A |
| Typical timeout for full chip erase ($2^N$ ms) | 44 | 22 | 0000 |
| Maximum timeout for single word/byte write times ($2^N$ X Typ) | 46 | 23 | 0005 |
| Maximum timeout for buffer write times ($2^N$ X Typ) | 48 | 24 | 0000 |
| Maximum timeout for individual sector erase times ($2^N$ X Typ) | 4A | 25 | 0004 |
| Maximum timeout for full chip erase times (not supported) | 4C | 26 | 0000 |

**Table 4-3. CFI Mode: Device Geometry Data Values**
(All values in these tables are in hexadecimal)

| Description | Address (Byte Mode) | Address (Word Mode) | Data |
|---|---|---|---|
| Device size ($2^N$ bytes) | 4E | 27 | 0015 |
| Flash device interface code (x8/x16 async.) | 50 | 28 | 0002 |
| | 52 | 29 | 0000 |
| Maximum number of bytes in multi-byte write (not supported) | 54 | 2A | 0000 |
| | 56 | 2B | 0000 |
| Number of erase sector regions | 58 | 2C | 0004 |
| Erase sector region 1 information (refer to the CFI publication 100) | 5A | 2D | 0000 |
| | 5C | 2E | 0000 |
| | 5E | 2F | 0040 |
| | 60 | 30 | 0000 |
| Erase sector region 2 information | 62 | 31 | 0001 |
| | 64 | 32 | 0000 |
| | 66 | 33 | 0020 |
| | 68 | 34 | 0000 |
| Erase sector region 3 information | 6A | 35 | 0000 |
| | 6C | 36 | 0000 |
| | 6E | 37 | 0080 |
| | 70 | 38 | 0000 |
| Erase sector region 4 information | 72 | 39 | 001E |
| | 74 | 3A | 0000 |
| | 76 | 3B | 0000 |
| | 78 | 3C | 0001 |

**Table 4-4. CFI Mode: Primary Vendor-Specific Extended Query Data Values**
(All values in these tables are in hexadecimal)

| Description | Address (Byte Mode) | Address (Word Mode) | Data |
|---|---|---|---|
| Query-unique ASCII string "PRI" | 80 | 40 | 0050 |
| | 82 | 41 | 0052 |
| | 84 | 42 | 0049 |
| Major version number, ASCII | 86 | 43 | 0031 |
| Minor version number, ASCII | 88 | 44 | 0030 |
| Address sensitive unlock (0=required, 1= not required) | 8A | 45 | 0000 |
| Erase suspend (2= to read and write) | 8C | 46 | 0002 |
| Sector protect (N= # of sectors/group) | 8E | 47 | 0001 |
| Temporary sector unprotect (1=supported) | 90 | 48 | 0001 |
| Sector protect/chip unprotect scheme | 92 | 49 | 0004 |
| Simultaneous R/W operation (0=not supported) | 94 | 4A | 0000 |
| Burst mode type (0=not supported) | 96 | 4B | 0000 |
| Page mode type (0=not supported) | 98 | 4C | 0000 |

## COMMAND DEFINITIONS

Device operations are selected by writing specific address and data sequences into the command register. Writing incorrect address and data values or writing them in the improper sequence will reset the device to the read mode. Table 5 defines the valid register command sequences. Note that the Erase Suspend (B0H) and Erase Resume (30H) commands are valid only while the Sector Erase operation is in progress.

**TABLE 5. MX29LV160CT/B COMMAND DEFINITIONS**

| Command | | Bus | First Bus Cycle | | Second Bus Cycle | | Third Bus Cycle | | Fourth Bus Cycle | | Fifth Bus Cycle | | Sixth Bus Cycle | |
|---|---|---|---|---|---|---|---|---|---|---|---|---|---|---|
| | | Cycle | Addr | Data | Addr | Data | Addr | Data | Addr | Data | Addr | Data | Addr | Data |
| Reset | | 1 | XXXH | F0H | | | | | | | | | | |
| Read | | 1 | RA | RD | | | | | | | | | | |
| Read Silicon ID | Word | 4 | 555H | AAH | 2AAH | 55H | 555H | 90H | ADI | DDI | | | | |
| | Byte | 4 | AAAH | AAH | 555H | 55H | AAAH | 90H | ADI | DDI | | | | |
| Sector Protect Verify | Word | 4 | 555H | AAH | 2AAH | 55H | 555H | 90H | (SA) | XX00H | | | | |
| | | | | | | | | | x02H | XX01H | | | | |
| | Byte | 4 | AAAH | AAH | 555H | 55H | AAAH | 90H | (SA) | 00H | | | | |
| | | | | | | | | | x04H | 01H | | | | |
| Program | Word | 4 | 555H | AAH | 2AAH | 55H | 555H | A0H | PA | PD | | | | |
| | Byte | 4 | AAAH | AAH | 555H | 55H | AAAH | A0H | PA | PD | | | | |
| Chip Erase | Word | 6 | 555H | AAH | 2AAH | 55H | 555H | 80H | 555H | AAH | 2AAH | 55H | 555H | 10H |
| | Byte | 6 | AAAH | AAH | 555H | 55H | AAAH | 80H | AAAH | AAH | 555H | 55H | AAAH | 10H |
| Sector Erase | Word | 6 | 555H | AAH | 2AAH | 55H | 555H | 80H | 555H | AAH | 2AAH | 55H | SA | 30H |
| | Byte | 6 | AAAH | AAH | 555H | 55H | AAAH | 80H | AAAH | AAH | 555H | 55H | SA | 30H |
| Sector Erase Suspend | | 1 | XXXH | B0H | | | | | | | | | | |
| Sector Erase Resume | | 1 | XXXH | 30H | | | | | | | | | | |
| CFI Query | Word | 1 | 55H | 98 | | | | | | | | | | |
| | Byte | | AAH | | | | | | | | | | | |

Note:
1. ADI = Address of Device identifier; A1=0, A0 = 0 for manufacturer code,A1=0, A0 = 1 for device code. A2-A19=do not care. (Refer to table 3)
   DDI = Data of Device identifier : C2H for manufacture code, C4H/49H (x8) and 22C4H/2249H (x16) for device code.
   X = X can be VIL or VIH
   RA=Address of memory location to be read. RD=Data to be read at location RA.
2. PA = Address of memory location to be programmed. PD = Data to be programmed at location PA.
   SA = Address of the sector to be erased.
3. The system should generate the following address patterns: 555H or 2AAH to Address A10~A0 in word mode/AAAH or 555H to Address A10~A-1 in byte mode.
   Address bit A11~A19=X=Don't care for all address commands except for Program Address (PA) and Sector Address (SA). Write Sequence may be initiated with A11~A19 in either state.
4. For Sector Protect Verify operation: If read out data is 01H, it means the sector has been protected. If read out data is 00H, it means the sector is still not being protected.
5. Any number of CFI data read cycles are permitted.

**TABLE 6. MX29LV160C T/B BUS OPERATION**

| DESCRIPTION | CE# | OE# | WE# | RESET# | ADDRESS | | | | | | | | Q0~Q7 | Q8~Q15 | |
|---|---|---|---|---|---|---|---|---|---|---|---|---|---|---|---|
| | | | | | A19 | A11 | A9 | A8 | A6 | A5 | A1 | A0 | | BYTE | BYTE |
| | | | | | A12 | A10 | | A7 | | A2 | | | | =VIH | =VIL |
| Read | L | L | H | H | AIN | | | | | | | | Dout | Dout | Q8~Q14 =High Z Q15=A-1 |
| Write | L | H | L | H | AIN | | | | | | | | DIN(3) | DIN | |
| Reset | X | X | X | L | X | | | | | | | | High Z | High Z | High Z |
| Temporary sector unlock | X | X | X | VID | AIN | | | | | | | | DIN | DIN | High Z |
| Output Disable | L | H | H | H | X | | | | | | | | High Z | High Z | High Z |
| Standby | Vcc± 0.3V | X | X | Vcc± 0.3V | X | | | | | | | | High Z | High Z | High Z |
| Sector Protect | L | H | L | VID | SA | X | X | X | L | X | H | L | DIN | X | X |
| Chip Unprotect | L | H | L | VID | X | X | X | X | H | X | H | L | DIN | X | X |
| Sector Protection Verify | L | L | H | H | SA | X | VID | X | L | X | H | L | CODE(5) | X | X |

**NOTES:**

1. Manufacturer and device codes may also be accessed via a command register write sequence. Refer to Table 4.
2. VID is the high voltage, 11.5V to 12.5V.
3. Refer to Table 5 for valid Data-In during a write operation.
4. X can be VIL or VIH.
5. Code=00H/XX00H means unprotected.
   Code=01H/XX01H means protected.
6. A19~A12=Sector address for sector protect.
7. The sector protect and chip unprotect functions may also be implemented via programming equipment.

**REQUIREMENTS FOR READING ARRAY DATA**

To read array data from the outputs, the system must drive the CE# and OE# pins to VIL. CE# is the power control and selects the device. OE# is the output control and gates array data to the output pins. WE# should remain at VIH.

The internal state machine is set for reading array data upon device power-up, or after a hardware reset. This ensures that no spurious alteration of the memory content occurs during the power transition. No command is necessary in this mode to obtain array data. Standard microprocessor read cycles that assert valid address on the device address inputs produce valid data on the device data outputs. The device remains enabled for read access until the command register contents are altered.

**WRITE COMMANDS/COMMAND SEQUENCES**

To program data to the device or erase sectors of memory, the system must drive WE# and CE# to VIL, and OE# to VIH.

An erase operation can erase one sector, multiple sectors, or the entire device. Table 1 and Table 2 indicate the address space that each sector occupies. A "sector address" consists of the address bits required to uniquely select a sector. The Writing specific address and data commands or sequences into the command register initiates device operations. Table 5 defines the valid register command sequences. Writing incorrect address and data values or writing them in the improper sequence resets the device to reading array data. Section has details on erasing a sector or the entire chip, or suspending/resuming the erase operation.

After the system writes the "read silicon-ID" and "sector protect verify" command sequence, the device enters the "read silicon-ID" and "sector protect verify" mode. The system can then read "read silicon-ID" and "sector protect verify" codes from the internal register (which is separate from the memory array) on Q7-Q0. Standard read cycle timings apply in this mode. Refer to the "read silicon-ID" and "sector protect verify" Mode and "read silicon-ID" and "sector protect verify" Command Sequence section for more information.

ICC2 in the DC Characteristics table represents the active current specification for the write mode. The "AC Characteristics" section contains timing specification table and timing diagrams for write operations.

**STANDBY MODE**

When using both pins of CE# and RESET#, the device enter CMOS Standby with both pins held at Vcc ±0.3V. If CE# and RESET# are held at VIH, but not within the range of VCC ±0.3V, the device will still be in the standby mode, but the standby current will be larger. During Auto Algorithm operation, Vcc active current (ICC2) is required even CE# = "H" until the operation is completed. The device can be read with standard access time (tCE) from either of these standby modes, before it is ready to read data.

**OUTPUT DISABLE**

With the OE# input at a logic high level (VIH), output from the devices are disabled. This will cause the output pins to be in a high impedance state.

**RESET# OPERATION**

The RESET# pin provides a hardware method of resetting the device to reading array data. When the RESET# pin is driven low for at least a period of tRP, the device immediately terminates any operation in progress, tristates all output pins, and ignores all read/write commands for the duration of the RESET# pulse. The device also resets the internal state machine to reading array data. The operation that was interrupted should be reinitiated once the device is ready to accept another command sequence, to ensure data integrity.

Current is reduced for the duration of the RESET# pulse. When RESET# is held at VSS±0.3V, the device draws CMOS standby current (ICC4). If RESET# is held at VIL but not within VSS±0.3V, the standby current will be greater.

The RESET# pin may be tied to system reset circuitry. A system reset would that also reset the Flash memory, enabling the system to read the boot-up firmware from the Flash memory.

If RESET# is asserted during a program or erase operation, the RY/BY# pin remains a "0" (busy) until the inter-

nal reset operation is complete, which requires a time of tREADY (during Embedded Algorithms). The system can thus monitor RY/BY# to determine whether the reset operation is complete. If RESET# is asserted when a program or erase operation is completed within a time of tREADY (not during Embedded Algorithms). The system can read data tRH after the RESET# pin returns to VIH.

Refer to the AC Characteristics tables for RESET# parameters and to Figure 22 for the timing diagram.

**READ/RESET COMMAND**

The read or reset operation is initiated by writing the read/reset command sequence into the command register. Microprocessor read cycles retrieve array data. The device remains enabled for reads until the command register contents are altered.

If program-fail or erase-fail happen, the write of F0H will reset the device to abort the operation. A valid command must then be written to place the device in the desired state.

**SILICON-ID READ COMMAND**

Flash memories are intended for use in applications where the local CPU alters memory contents. As such, manufacturer and device codes must be accessible while the device resides in the target system. PROM programmers typically access signature codes by raising A9 to a high voltage (VID). However, multiplexing high voltage onto address lines is not generally desired system design practice.

The MX29LV160C T/B contains a Silicon-ID-Read operation to supple traditional PROM programming methodology. The operation is initiated by writing the read silicon ID command sequence into the command register. Following the command write, a read cycle with A1=VIL, A0=VIL retrieves the manufacturer code of C2H/00C2H. A read cycle with A1=VIL, A0=VIH returns the device code of C4H/22C4H for MX29LV160CT, 49H/2249H for MX29LV160CB.

The system must write the reset command to exit the "Silicon-ID Read Command" code.

**AUTOMATIC CHIP ERASE COMMANDS**

Chip erase is a six-bus cycle operation. There are two "unlock" write cycles. These are followed by writing the "set-up" command 80H. Two more "unlock" write cycles are then followed by the chip erase command 10H.

The device does not require the system to entirely preprogram prior to executing the Automatic Chip Erase. Upon executing the Automatic Chip Erase, the device will automatically program and verify the entire memory for an all-zero data pattern. When the device is automatically verified to contain an all-zero pattern, a self-timed chip erase and verify begin. The erase and verify operations are completed when the data on Q7 is "1" at which time the device returns to the Read mode. The system is not required to provide any control or timing during these operations.

When using the Automatic Chip Erase algorithm, note that the erase automatically terminates when adequate erase margin has been achieved for the memory array (no erase verification command is required).

If the Erase operation was unsuccessful, the data on Q5 is "1" (see Table 8), indicating the erase operation exceed internal timing limit.

The automatic erase begins on the rising edge of the last WE# or CE# pulse, whichever happens first in the command sequence and terminates when either the data on Q7 is "1" at which time the device returns to the Read mode or the data on Q6 stops toggling for two consecutive read cycles at which time the device returns to the Read mode.

**TABLE 7. SILICON ID CODE**

| Pins | | A0 | A1 | Q15~Q8 | Q7 | Q6 | Q5 | Q4 | Q3 | Q2 | Q1 | Q0 | Code(Hex) |
|---|---|---|---|---|---|---|---|---|---|---|---|---|---|
| Manufacturer code | Word | VIL | VIL | 00H | 1 | 1 | 0 | 0 | 0 | 0 | 1 | 0 | 00C2H |
| | Byte | VIL | VIL | X | 1 | 1 | 0 | 0 | 0 | 0 | 1 | 0 | C2H |
| Device code | Word | VIH | VIL | 22H | 1 | 1 | 0 | 0 | 0 | 1 | 0 | 0 | 22C4H |
| for MX29LV160CT | Byte | VIH | VIL | X | 1 | 1 | 0 | 0 | 0 | 1 | 0 | 0 | C4H |
| Device code | Word | VIH | VIL | 22H | 0 | 1 | 0 | 0 | 1 | 0 | 0 | 1 | 2249H |
| for MX29LV160CB | Byte | VIH | VIL | X | 0 | 1 | 0 | 0 | 1 | 0 | 0 | 1 | 49H |
| Sector Protection | Word | X | VIH | X | 0 | 0 | 0 | 0 | 0 | 0 | 0 | 1 | 01H (Protected) |
| Verification | Byte | X | VIH | X | 0 | 0 | 0 | 0 | 0 | 0 | 0 | 0 | 00H (Unprotected) |

**READING ARRAY DATA**

The device is automatically set to reading array data after device power-up. No commands are required to retrieve data. The device is also ready to read array data after completing an Automatic Program or Automatic Erase algorithm.

After the device accepts an Erase Suspend command, the device enters the Erase Suspend mode. The system can read array data using the standard read timings, except that if it reads at an address within erase-suspended sectors, the device outputs status data. After completing a programming operation in the Erase Suspend mode, the system may once again read array data with the same exception. See "Erase Suspend/Erase Resume Commands" for more information on this mode. The system must issue the reset command to re-enable the device for reading array data if Q5 goes high, or while in the "read silicon-ID" and "sector protect verify" mode. See the "Reset Command" section, next.

**RESET COMMAND**

Writing the reset command to the device resets the device to reading array data. Address bits are don't care for this command.

The reset command may be written between the sequence cycles in an erase command sequence before erasing begins. This resets the device to reading array data. Once erasure begins, however, the device ignores reset commands until the operation is complete.

The reset command may be written between the sequence cycles in a program command sequence before programming begins. This resets the device to reading array data (also applies to programming in Erase Suspend mode). Once programming begins, however, the device ignores reset commands until the operation is complete.

The reset command may be written between the sequence cycles in an Automatic Select command sequence. Once in the Automatic Select mode, the reset command must be written to return to reading array data (also applies to Automatic Select during Erase Suspend).

If Q5 goes high during a program or erase operation, writing the reset command returns the device to reading array data (also applies during Erase Suspend).

**SECTOR ERASE COMMANDS**

The device does not require the system to entirely pre-program prior to executing the Automatic Sector Erase Set-up command and Automatic Sector Erase command. Upon executing the Automatic Sector Erase command, the device will automatically program and verify the sector(s) memory for an all-zero data pattern. The system is not required to provide any control or timing during these operations.

When the sector(s) is automatically verified to contain an all-zero pattern, a self-timed sector erase and verify begin. The erase and verify operations are complete when either the data on Q7 is "1" at which time the device returns to the Read mode or the data on Q6 stops toggling for two consecutive read cycles at which time the device returns to the Read mode. The system is not required to provide any control or timing during these operations.

When using the Automatic Sector Erase algorithm, note that the erase automatically terminates when adequate erase margin has been achieved for the memory array (no erase verification command is required). Sector erase is a six-bus cycle operation. There are two "unlock" write cycles. These are followed by writing the set-up command 80H. Two more "unlock" write cycles are then followed by the sector erase command 30H. The sector address is latched on the falling edge of WE# or CE#, whichever happens later, while the command (data) is latched on the rising edge of WE# or CE#, whichever happens first. Sector addresses selected are loaded into internal register on the sixth falling edge of WE# or CE#, whichever happens later. Each successive sector load cycle started by the falling edge of WE# or CE#, whichever happens later must begin within 50us from the rising edge of the preceding WE# or CE#, whichever happens first. Otherwise, the loading period ends and internal auto sector erase cycle starts. (Monitor Q3 to determine if the sector erase timer window is still open, see section Q3, Sector Erase Timer.) Any command other than Sector Erase (30H) or Erase Suspend (B0H) during the time-out period resets the device to read mode.

**ERASE SUSPEND**

This command only has meaning while the state machine is executing Automatic Sector Erase operation, and therefore will only be responded during Automatic Sector Erase operation. When the Erase Suspend Command is issued during the sector erase operation, the device requires a maximum 20us to suspend the sector erase operation. However, when the Erase Suspend command is written during the sector erase time-out, the device immediately terminates the time-out period and suspends the erase operation. After this command has been executed, the command register will initiate erase suspend mode. The state machine will return to read mode automatically after suspend is ready. At this time, state machine only allows the command register to respond to Erase Resume, program data to , or read data from any sector not selected for erasure. The system can use Q7 or Q6 and Q2 together, to determine if a sector is actively erasing or is erase-suspend.

The system can determine the status of the program operation using the Q7 or Q6 status bits, just as in the standard program operation. After an erase-suspend program operation is complete, the system can once again read array data within non-suspended sectors.

**ERASE RESUME**

This command will cause the command register to clear the suspend state and return back to Sector Erase mode but only if an Erase Suspend command was previously issued. Erase Resume will not have any effect in all other conditions. Another Erase Suspend command can be written after the chip has resumed erasing. The minimum time from Erase Resume to next Erase Suspend is 400us. Repeatedly suspending the device more often may have undetermined effects.

**WORD/BYTE PROGRAM COMMAND SEQUENCE**

The device programs one byte of data for each program operation. The command sequence requires four bus cycles, and is initiated by writing two unlock write cycles, followed by the program set-up command. The program address and data are written next, which in turn initiate the Embedded Program algorithm. The system is not required to provide further controls or timings. The device automatically generates the program pulses and verifies the programmed cell margin. Table 5 shows the address and data requirements for the byte program command sequence.

When the Embedded Program algorithm is complete, the

device then returns to reading array data and addresses are no longer latched. The system can determine the status of the program operation by using
Q7, Q6, or RY/BY#. See "Write Operation Status" for information on these status bits.

Any commands written to the device during the Embedded Program Algorithm are ignored. Note that a hardware reset immediately terminates the programming operation. The Byte/Word Program command sequence should be reinitiated once the device has reset to reading array data, to ensure data integrity.

Programming is allowed in any sequence and across sector boundaries. A bit cannot be programmed from a "0" back to a "1". Attempting to do so may cause the device to set Q5 to "1", or cause the Data# Polling algorithm to indicate the operation was successful. However, a succeeding read will show that the data is still "0". Only erase operations can convert a "0" to a "1".

**WRITE OPERATION STATUS**

The device provides several bits to determine the status of a write operation: Q2, Q3, Q5, Q6, Q7, and RY/BY#. Table 8 and the following subsections describe the functions of these bits. Q7, RY/BY#, and Q6 each offer a method for determining whether a program or erase operation is complete or in progress. These three bits are discussed first.

**Q7: Data# Polling**

The Data# Polling bit, Q7, indicates to the host system whether an Automatic Algorithm is in progress or completed, or whether the device is in Erase Suspend. Data# Polling is valid after the rising edge of the final WE# pulse in the program or erase command sequence.

During the Automatic Program algorithm, the device outputs on Q7 the complement of the datum programmed to Q7. This Q7 status also applies to programming during Erase Suspend. When the Automatic Program algorithm is complete, the device outputs the datum programmed to Q7. The system must provide the program address to read valid status information on Q7. If a program address falls within a protected sector, Data# Polling on Q7 is active for approximately 1 us, then the device returns to reading array data.

During the Automatic Erase algorithm, Data# Polling produces a "0" on Q7. When the Automatic Erase algorithm is complete, or if the device enters the Erase Suspend mode, Data# Polling produces a "1" on Q7. This is analogous to the complement/true datum output described for the Automatic Program algorithm: the erase function changes all the bits in a sector to "1" prior to this, the device outputs the "complement," or "0"." The system must provide an address within any of the sectors selected for erasure to read valid status information on Q7.

After an erase command sequence is written, if all sectors selected for erasing are protected, Data# Polling on Q7 is active for approximately 100 us, then the device returns to reading array data. If not all selected sectors are protected, the Automatic Erase algorithm erases the unprotected sectors, and ignores the selected sectors that are protected.

When the system detects Q7 has changed from the complement to true data, it can read valid data at Q7-Q0 on the following read cycles. This is because Q7 may change asynchronously with Q0-Q6 while Output Enable (OE#) is asserted low.

**RY/BY# : Ready/Busy**

The RY/BY# is a dedicated, open-drain output pin that indicates whether an Automatic Erase/Program algorithm is in progress or complete. The RY/BY# status is valid after the rising edge of the final WE# or CE#, whichever happens first, in the command sequence. Since RY/BY# is an open-drain output, several RY/BY# pins can be tied together in parallel with a pull-up resistor to Vcc.

If the output is low (Busy), the device is actively erasing or programming. (This includes programming in the Erase Suspend mode.) If the output is high (Ready), the device is ready to read array data (including during the Erase Suspend mode), or is in the standby mode.

Table 8 shows the outputs for RY/BY# during write operation.

**Q6:Toggle BIT I**

Toggle Bit I on Q6 indicates whether an Automatic Program or Erase algorithm is in progress or complete, or whether the device has entered the Erase Suspend mode.

Toggle Bit I may be read at any address, and is valid after the rising edge of the final WE# or CE#, whichever happens first, in the command sequence (prior to the program or erase operation), and during the sector time-out.

During an Automatic Program or Erase algorithm operation, successive read cycles to any address cause Q6 to toggle. The system may use either OE# or CE# to control the read cycles. When the operation is complete, Q6 stops toggling.

After an erase command sequence is written, if all sectors selected for erasing are protected, Q6 toggles and returns to reading array data. If not all selected sectors are protected, the Automatic Erase algorithm erases the unprotected sectors, and ignores the selected sectors that are protected.

The system can use Q6 and Q2 together to determine whether a sector is actively erasing or is erase suspended. When the device is actively erasing (that is, the Automatic Erase algorithm is in progress), Q6 toggling. When the device enters the Erase Suspend mode, Q6 stops toggling. However, the system must also use Q2 to determine which sectors are erasing or erase-suspended. Alternatively, the system can use Q7.

If a program address falls within a protected sector, Q6 toggles for approximately 2 us after the program command sequence is written, then returns to reading array data.

Q6 also toggles during the erase-suspend-program mode, and stops toggling once the Automatic Program algorithm is complete.

Table 8 shows the outputs for Toggle Bit I on Q6.

**Q2:Toggle Bit II**

The "Toggle Bit II" on Q2, when used with Q6, indicates whether a particular sector is actively erasing (that is, the Automatic Erase algorithm is in process), or whether that sector is erase-suspended. Toggle Bit II is valid after the rising edge of the final WE# or CE#, whichever happens first, in the command sequence.

Q2 toggles when the system reads at addresses within those sectors that have been selected for erasure. (The system may use either OE# or CE# to control the read cycles.) But Q2 cannot distinguish whether the sector is actively erasing or is erase-suspended. Q6, by comparison, indicates whether the device is actively erasing, or is in Erase Suspend, but cannot distinguish which sectors are selected for erasure. Thus, both status bits are required for sectors and mode information. Refer to Table 7 to compare outputs for Q2 and Q6.

**Reading Toggle Bits Q6/ Q2**

Whenever the system initially begins reading toggle bit status, it must read Q7-Q0 at least twice in a row to determine whether a toggle bit is toggling. Typically, the system would note and store the value of the toggle bit after the first read. After the second read, the system would compare the new value of the toggle bit with the first. If the toggle bit is not toggling, the device has completed the program or erase operation. The system can read array data on Q7-Q0 on the following read cycle.

However, if after the initial two read cycles, the system determines that the toggle bit is still toggling, the system also should note whether the value of Q5 is high (see the section on Q5). If it is, the system should then determine again whether the toggle bit is toggling, since the toggle bit may have stopped toggling just as Q5 went high. If the toggle bit is no longer toggling, the device has successfully completed the program or erase operation. If it is still toggling, the device did not complete the operation successfully, and the system must write the reset command to return to reading array data.

The remaining scenario is that system initially determines that the toggle bit is toggling and Q5 has not gone high. The system may continue to monitor the toggle bit and Q5 through successive read cycles, determining the status as described in the previous paragraph. Alternatively, it may choose to perform other system tasks. In this case, the system must start at the beginning of the algorithm when it returns to determine the status of the operation.

**Q5 : Exceeded Timing Limits**

Q5 will indicate if the program or erase time has exceeded the specified limits (internal pulse count). Under these conditions Q5 will produce a "1". This time-out condition indicates that the program or erase cycle was not suc-

cessfully completed. Data# Polling and Toggle Bit are the only operating functions of the device under this condition.

If this time-out condition occurs during sector erase operation, it specifies that a particular sector is bad and it may not be reused. However, other sectors are still functional and may be used for the program or erase operation. The device must be reset to use other sectors. Write the Reset command sequence to the device, and then execute program or erase command sequence. This allows the system to continue to use the other active sectors in the device.

If this time-out condition occurs during the chip erase operation, it specifies that the entire chip is bad or combination of sectors are bad.

If this time-out condition occurs during the byte/word programming operation, it specifies that the entire sector containing that byte/word is bad and this sector may not be reused, (other sectors are still functional and can be reused).

The time-out condition will not appear if a user tries to program a non blank location without erasing. Please note that this is not a device failure condition since the device was incorrectly used.

**Table 8. WRITE OPERATION STATUS**

| | **Status** | | **Q7 (Note1)** | **Q6** | **Q5 (Note2)** | **Q3** | **Q2** | **RY/BY#** |
|---|---|---|---|---|---|---|---|---|
| In Progress | Byte/Word Program in Auto Program Algorithm | | Q7# | Toggle | 0 | N/A | No Toggle | 0 |
| | Auto Erase Algorithm | | 0 | Toggle | 0 | 1 | Toggle | 0 |
| | Erase Suspended Mode | Erase Suspend Read (Erase Suspended Sector) | 1 | No Toggle | 0 | N/A | Toggle | 1 |
| | | Erase Suspend Read (Non-Erase Suspended Sector) | Data | Data | Data | Data | Data | 1 |
| | | Erase Suspend Program | Q7# | Toggle | 0 | N/A | N/A | 0 |
| Exceeded Time Limits | Byte/Word Program in Auto Program Algorithm | | Q7# | Toggle | 1 | N/A | No Toggle | 0 |
| | Auto Erase Algorithm | | 0 | Toggle | 1 | 1 | Toggle | 0 |
| | Erase Suspend Program | | Q7# | Toggle | 1 | N/A | N/A | 0 |

Notes:
1. Q7 and Q2 require a valid address when reading status information. Refer to the appropriate subsection for further details.
2. Q5 switches to '1' when an Auto Program or Auto Erase operation has exceeded the maximum timing limits. See "Q5: Exceeded Timing Limits " for more information.

**Q3**
**Sector Erase Timer**

After the completion of the initial sector erase command sequence, the sector erase time-out will begin. Q3 will remain low until the time-out is complete. Data# Polling and Toggle Bit are valid after the initial sector erase command sequence.

If Data# Polling or the Toggle Bit indicates the device has been written with a valid erase command, Q3 may be used to determine if the sector erase timer window is still open. If Q3 is high ("1") the internally controlled erase cycle has begun; attempts to write subsequent commands to the device will be ignored until the erase operation is completed as indicated by Data# Polling or Toggle Bit. If Q3 is low ("0"), the device will accept additional sector erase commands. To insure the command has been accepted, the system software should check the status of Q3 prior to and following each subsequent sector erase command. If Q3 were high on the second status check, the command may not have been accepted.

## DATA PROTECTION

The MX29LV160C T/B is designed to offer protection against accidental erasure or programming caused by spurious system level signals that may exist during power transition. During power up the device automatically resets the state machine in the Read mode. In addition, with its control register architecture, alteration of the memory contents only occurs after successful completion of specific command sequences. The device also incorporates several features to prevent inadvertent write cycles resulting from VCC power-up and power-down transition or system noise.

## WRITE PULSE "GLITCH" PROTECTION

Noise pulses of less than 5ns (typical) on OE#, CE# or WE# will not initiate a write cycle.

## LOGICAL INHIBIT

Writing is inhibited by holding any one of OE# = VIL, CE# = VIH or WE# = VIH. To initiate a write cycle CE# and WE# must be a logical zero while OE# is a logical one.

## POWER SUPPLY DECOUPLING

In order to reduce power switching effect, each device should have a 0.1uF ceramic capacitor connected between its VCC and GND.

## POWER-UP SEQUENCE

The MX29LV160C T/B powers up in the Read only mode. In addition, the memory contents may only be altered after successful completion of the predefined command sequences.

## TEMPORARY SECTOR UNPROTECT

This feature allows temporary unprotection of previously protected sector to change data in-system. The Temporary Sector Unprotect mode is activated by setting the RESET# pin to VID (11.5V-12.5V). During this mode, formerly protected sectors can be programmed or erased as un-protected sector. Once VID is remove from the RESET# pin. All the previously protected sectors are protected again.

## SECTOR PROTECTION

The MX29LV160C T/B features hardware sector protection. This feature will disable both program and erase operations for these sectors protected. To activate this mode, the programming equipment must force VID on address pin A9 and OE# (suggest VID = 12V). Programming of the protection circuitry begins on the falling edge of the WE# pulse and is terminated on the rising edge. Please refer to sector protect algorithm and waveform.

To verify programming of the protection circuitry, the programming equipment must force VID on address pin A9 ( with CE# and OE# at VIL and WE# at VIH). When A1=VIH, A0=VIL, A6=VIL, it will produce a logical "1" code at device output Q0 for a protected sector. Otherwise the device will produce 00H for the unprotected sector. In this mode, the addresses, except for A1, are don't care. Address locations with A1 = VIL are reserved to read manufacturer and device codes. (Read Silicon ID)

It is also possible to determine if the sector is protected in the system by writing a Read Silicon ID command. Performing a read operation with A1=VIH, it will produce

a logical "1" at Q0 for the protected sector.

The system must write the reset command to exit the "Silicon-ID Read Command" code.

**CHIP UNPROTECT**

The MX29LV160C T/B also features the chip unprotect mode, so that all sectors are unprotected after chip unprotect is completed to incorporate any changes in the code. It is recommended to protect all sectors before activating chip unprotect mode.

To activate this mode, the programming equipment must force VID on control pin OE# and address pin A9. The CE# pins must be set at VIL. Pins A6 must be set to VIH. Refer to chip unprotect algorithm and waveform for the chip unprotect algorithm. The unprotection mechanism begins on the falling edge of the WE# pulse and is terminated on the rising edge.

It is also possible to determine if the chip is unprotected in the system by writing the Read Silicon ID command. Performing a read operation with A1=VIH, it will produce 00H at data outputs(Q0-Q7) for an unprotected sector.

It is noted that all sectors are unprotected after the chip unprotect algorithm is completed.

## ABSOLUTE MAXIMUM RATINGS

Storage Temperature
Plastic Packages . . . . . ..... -65°C to +150°C
Ambient Temperature
with Power Applied. . . . . .... -65°C to +125°C
Voltage with Respect to Ground
VCC (Note 1) . . . . . -0.5 V to +4.0 V
A9, OE#, and
RESET# (Note 2) . . . . . ....-0.5 V to +12.5 V
All other pins (Note 1) . . . . . -0.5 V to VCC +0.5 V
Output Short Circuit Current (Note 3) . . . . . 200 mA

Notes:
1. Minimum DC voltage on input or I/O pins is -0.5 V. During voltage transitions, input or I/O pins may overshoot VSS to -2.0 V for periods of up to 20 ns. Maximum DC voltage on input or I/O pins is VCC +0.5 V. During voltage transitions, input or I/O pins may overshoot to VCC +2.0 V for periods up to 20 ns.
2. Minimum DC input voltage on pins A9, OE#, and RESET# is -0.5 V. During voltage transitions, A9, OE#, and RESET# may overshoot VSS to -2.0 V for periods of up to 20 ns. Maximum DC input voltage on pin A9 is +12.5 V which may overshoot to 14.0 V for periods up to 20 ns.
3. No more than one output may be shorted to ground at a time. Duration of the short circuit should not be greater than one second.

Stresses above those listed under "Absolute Maximum Ratings" may cause permanent damage to the device. This is a stress rating only; functional operation of the device at these or any other conditions above those indicated in the operational sections of this data sheet is not implied. Exposure of the device to absolute maximum rating conditions for extended periods may affect device reliability.

## OPERATING RATINGS

**Commercial (C) Devices**
Ambient Temperature ($T_A$). . . . . 0° C to +70° C
**Industrial (I) Devices**
Ambient Temperature ($T_A$). . . . . -40° C to +85° C
**$V_{CC}$ Supply Voltages**
$V_{CC}$ for full voltage range. . . . . +2.7 V to 3.6 V

Operating ranges define those limits between which the functionality of the device is guaranteed.

**CAPACITANCE TA = 25°C, f = 1.0 MHz**

| SYMBOL | PARAMETER | MIN. | TYP | MAX. | UNIT | CONDITIONS |
|---|---|---|---|---|---|---|
| CIN1 | Input Capacitance | | 6 | 7.5 | pF | VIN = 0V |
| CIN2 | Control Pin Capacitance | | 7.5 | 9 | pF | VIN = 0V |
| COUT | Output Capacitance | | 8.5 | 12 | pF | VOUT = 0V |

**Table 9. DC CHARACTERISTICS TA = -40°C TO 85°C, VCC = 2.7V~3.6V**

| Symbol | PARAMETER | MIN. | TYP | MAX. | UNIT | CONDITIONS | |
|---|---|---|---|---|---|---|---|
| ILI | Input Leakage Current | | | ± 1 | uA | VIN = VSS to VCC, VCC=VCC max | |
| ILIT | A9 Input Leakage Current | | | 35 | uA | VCC=VCC max; A9=12.5V | |
| ILO | Output Leakage Current | | | ± 1 | uA | VOUT = VSS to VCC, VCC=VCC max | |
| ICC1 | VCC Active Read Current | | 9 | 16 | mA | CE#=VIL, OE#=VIH | @5MHz |
| | | | 2 | 4 | mA | (Byte Mode) | @1MHz |
| | | | 9 | 16 | mA | CE#=VIL, OE#=VIH | @5MHz |
| | | | 2 | 4 | mA | (Word Mode) | @1MHz |
| ICC2 | VCC Active write Current | | 20 | 30 | mA | CE#=VIL, OE#=VIH, WE#=VIL | |
| ICC3 | VCC Standby Current | | 0.2 | 5 | uA | CE#; RESET#=VCC ±0.3V | |
| ICC4 | VCC Standby Current During Reset (See Conditions) | | 0.2 | 5 | uA | RESET#=VSS ±0.3V | |
| ICC5 | Automatic sleep mode | | 0.2 | 5 | uA | VIH=VCC ±0.3V;VIL=VSS ±0.3V | |
| VIL | Input Low Voltage (Note 1) | -0.5 | | 0.8 | V | | |
| VIH | Input High Voltage | 0.7xVCC | | VCC+ 0.3 | V | | |
| VID | Voltage for Automatic Select and Temporary Sector Unprotect | 11.5 | | 12.5 | V | VCC=3.3V | |
| VOL | Output Low Voltage | | | 0.45 | V | IOL = 4.0mA, VCC= VCC min | |
| VOH1 | Output High Voltage (TTL) | 0.85xVCC | | | | IOH = -2mA, VCC=VCC min | |
| VOH2 | Output High Voltage (CMOS) | VCC-0.4 | | | | IOH = -100uA, VCC min | |
| VLKO | Low VCC Lock-out Voltage | 1.4 | | 2.1 | V | | |

NOTES:
1. VIL min. = -1.0V for pulse width is equal to or less than 50 ns.
   VIL min. = -2.0V for pulse width is equal to or less than 20 ns.
2. VIH max. = VCC + 1.5V for pulse width is equal to or less than 20 ns
   If VIH is over the specified maximum value, read operation cannot be guaranteed.
3. Automatic sleep mode enable the low power mode when addresses remain stable for tACC +30ns.

**AC CHARACTERISTICS TA = -40°C to 85°C, VCC = 2.7V~3.6V**

**Table 10. READ OPERATIONS**

| | | | 29LV160C-55R | | 29LV160C-70 | | 29LV160C-90 | | | |
|---|---|---|---|---|---|---|---|---|---|---|
| **SYMBOL** | **PARAMETER** | | **MIN.** | **MAX.** | **MIN.** | **MAX.** | **MIN.** | **MAX.** | **UNIT** | **CONDITIONS** |
| tRC | Read Cycle Time (Note 1) | | 55 | | 70 | | 90 | | ns | |
| tACC | Address to Output Delay | | | 55 | | 70 | | 90 | ns | CE#=OE#=VIL |
| tCE | CE# to Output Delay | | | 55 | | 70 | | 90 | ns | OE#=VIL |
| tOE | OE# to Output Delay | | | 30 | | 30 | | 30 | ns | CE#=VIL |
| tDF | OE# High to Output Float (Note 2) | | 0 | 25 | 0 | 25 | 0 | 25 | ns | CE#=VIL |
| tOEH | Output Enable | Read | 0 | | 0 | | 0 | | ns | |
| | Hold Time | Toggle and Data# Polling | 10 | | 10 | | 10 | | ns | |
| tOH | Address to Output hold | | 0 | | 0 | | 0 | | ns | CE#=OE#=VIL |

**TEST CONDITIONS:**

- Input pulse levels: 0V/3.0V.
- Input rise and fall times is equal to or less than 5ns.
- Output load: 1 TTL gate + 100pF (Including scope and jig) for 29LV160C T/B-90, 1 TTL gate + 30pF (Including scope and jig) for 29LV160C T/B-70.
- Reference levels for measuring timing: 1.5V.

**NOTES:**

1. Not 100% tested.
2. tDF is defined as the time at which the output achieves the open circuit condition and data is no longer driven.

## SWITCHING TEST CIRCUITS

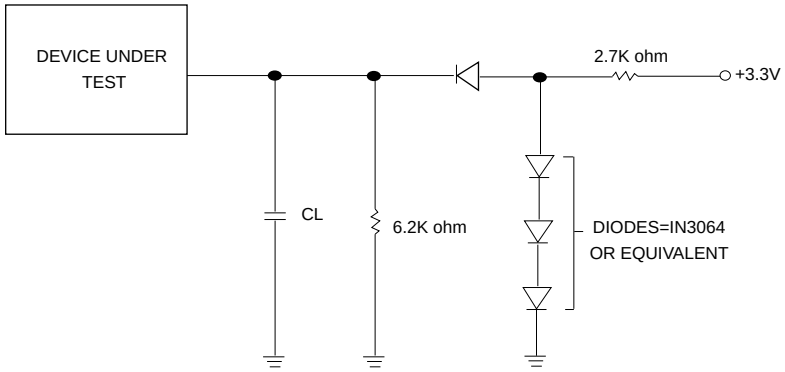


CL=100pF Including jig capacitance for MX29LV160C T/B-90

CL=30pF Including jig capacitance for MX29LV160C T/B-70

## SWITCHING TEST WAVEFORMS

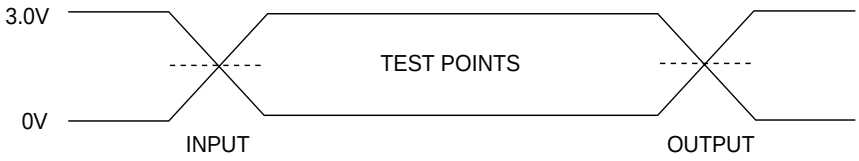


AC TESTING: Inputs are driven at 3.0V for a logic "1" and 0V for a logic "0".
Input pulse rise and fall times are < 5ns.

**Figure 1. READ TIMING WAVEFORMS**

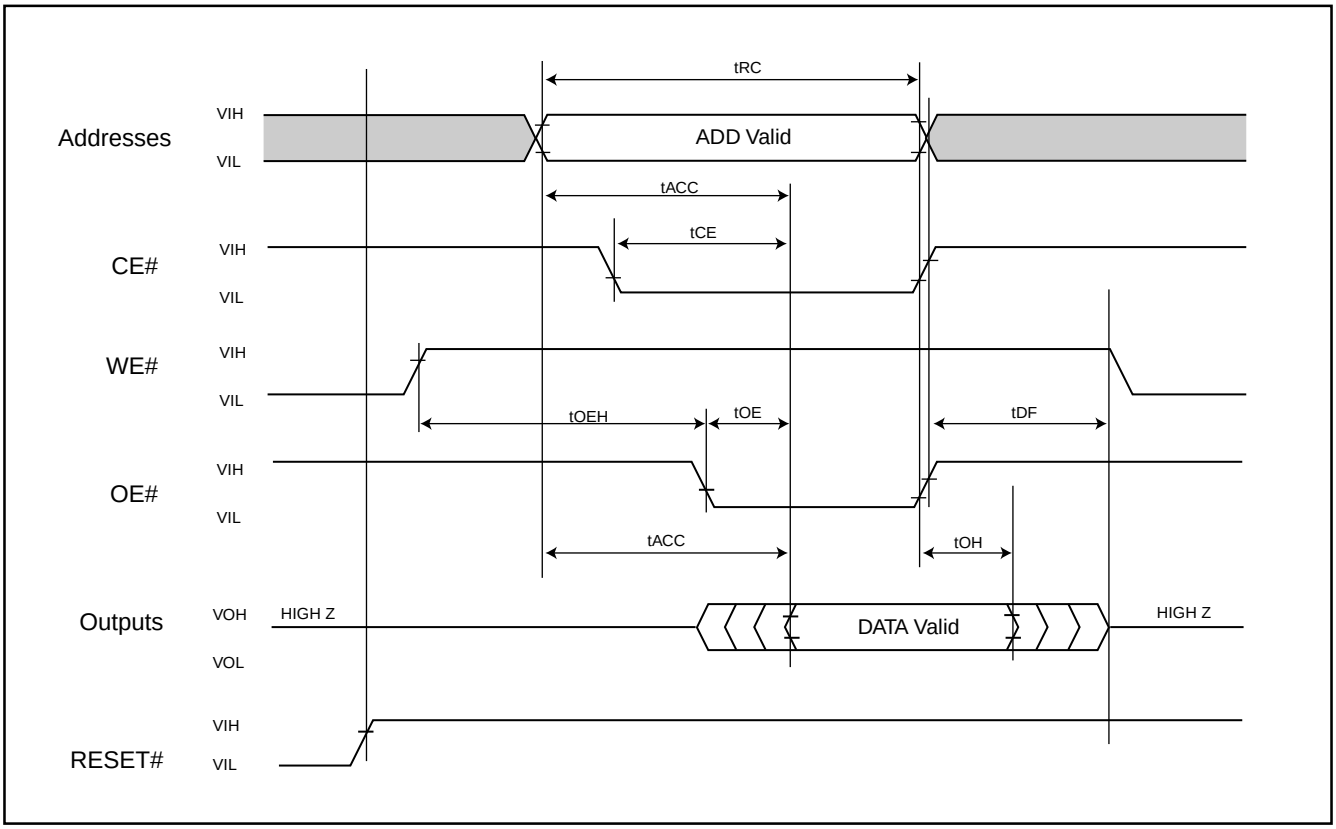

**AC CHARACTERISTICS TA = -40°C to 85°C, VCC = 2.7V~3.6V**

**Table 11. Erase/Program Operations**

| | | 29LV160C-55R | | 29LV160C-70 | | 29LV160C-90 | | |
|---|---|---|---|---|---|---|---|---|
| **SYMBOL** | **PARAMETER** | **MIN.** | **MAX.** | **MIN.** | **MAX.** | **MIN.** | **MAX.** | **UNIT** |
| tWC | Write Cycle Time (Note 1) | 55 | | 70 | | 90 | | ns |
| tAS | Address Setup Time | 0 | | 0 | | 0 | | ns |
| tAH | Address Hold Time | 45 | | 45 | | 45 | | ns |
| tDS | Data Setup Time | 35 | | 35 | | 45 | | ns |
| tDH | Data Hold Time | 0 | | 0 | | 0 | | ns |
| tOES | Output Enable Setup Time | 0 | | 0 | | 0 | | ns |
| tGHWL | Read Recovery Time Before Write (OE# High to WE# Low) | 0 | | 0 | | 0 | | ns |
| tCS | CE# Setup Time | 0 | | 0 | | 0 | | ns |
| tCH | CE# Hold Time | 0 | | 0 | | 0 | | ns |
| tWP | Write Pulse Width | 35 | | 35 | | 35 | | ns |
| tWPH | Write Pulse Width High | 30 | | 30 | | 30 | | ns |
| tWHWH1 | Programming Operation (Note 2) (Byte/Word program time) | 9/11(typ.) | | 9/11(typ.) | | 9/11(typ.) | | us |
| tWHWH2 | Sector Erase Operation (Note 2) | 0.7(typ.) | | 0.7(typ.) | | 0.7(typ.) | | sec |
| tVCS | VCC Setup Time (Note 1) | 50 | | 50 | | 50 | | us |
| tRB | Recovery Time from RY/BY# | 0 | | 0 | | 0 | | ns |
| tBUSY | Sector Erase Valid to RY/BY# Delay | | 90 | | 90 | | 90 | ns |
| | Chip Erase Valid to RY/BY# Delay | | 90 | | 90 | | 90 | ns |
| | Program Valid to RY/BY# Delay | | 90 | | 90 | | 90 | ns |
| tWPP1 | Write pulse width for sector protect (A9, OE# Control) | 100ns | 10us (typ.) | 100ns | 10us (typ.) | 100ns | 10us (typ.) | |
| tWPP2 | Write pulse width for sector unprotect (A9, OE# Control) | 100ns | 12ms (typ.) | 100ns | 12ms (typ.) | 100ns | 12ms (typ.) | |
| tVLHT | Voltage transition time | 4 | | 4 | | 4 | | us |
| tOESP | OE# setup time to WE# active | 4 | | 4 | | 4 | | us |

**NOTES:**

1. Not 100% tested.
2. See the "Erase and Programming Performance" section for more information.

**AC CHARACTERISTICS TA = -40°C to 85°C, VCC = 2.7V~3.6V**

**Table 12. Alternate CE# Controlled Erase/Program Operations**

| | | | 29LV160C-55R | | 29LV160C-70 | | 29LV160C-90 | | |
|---|---|---|---|---|---|---|---|---|---|
| **SYMBOL** | **PARAMETER** | | **MIN.** | **MAX.** | **MIN.** | **MAX.** | **MIN.** | **MAX.** | **UNIT** |
| tWC | Write Cycle Time (Note 1) | | 55 | | 70 | | 90 | | ns |
| tAS | Address Setup Time | | 0 | | 0 | | 0 | | ns |
| tAH | Address Hold Time | | 45 | | 45 | | 45 | | ns |
| tDS | Data Setup Time | | 35 | | 35 | | 45 | | ns |
| tDH | Data Hold Time | | 0 | | 0 | | 0 | | ns |
| tOES | Output Enable Setup Time | | 0 | | 0 | | 0 | | ns |
| tGHEL | Read Recovery Time Before Write | | 0 | | 0 | | 0 | | ns |
| tWS | WE# Setup Time | | 0 | | 0 | | 0 | | ns |
| tWH | WE# Hold Time | | 0 | | 0 | | 0 | | ns |
| tCP | CE# Pulse Width | | 35 | | 35 | | 35 | | ns |
| tCPH | CE# Pulse Width High | | 30 | | 30 | | 30 | | ns |
| tWHWH1 | Programming | Byte | 9(Typ.) | | 9(Typ.) | | 9(Typ.) | | us |
| | Operation(note2) | Word | 11(Typ.) | | 11(Typ.) | | 11(Typ.) | | us |
| tWHWH2 | Sector Erase Operation (note2) | | 0.7(Typ.) | | 0.7(Typ.) | | 0.7(Typ.) | | sec |

**Notes:**
1. Not 100% tested.
2. See the "Erase and Programming Performance" section for more information.

**Figure 2. COMMAND WRITE TIMING WAVEFORM**

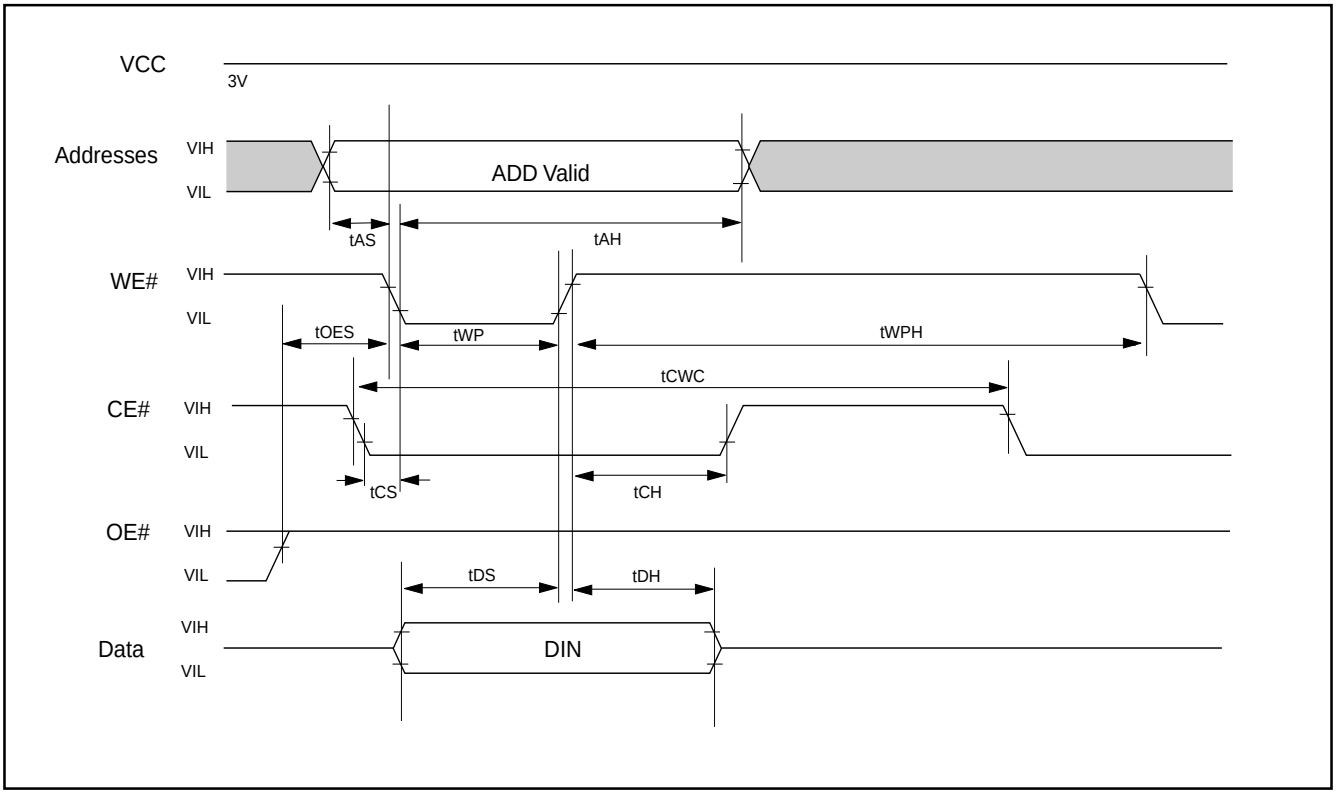

## AUTOMATIC PROGRAMMING TIMING WAVEFORM

One byte data is programmed. Verify in fast algorithm and additional verification by external control are not required because these operations are executed automatically by internal control circuit. Programming completion can be verified by Data# Polling or toggle bit checking after automatic programming starts. Device outputs DATA# during programming and DATA# after programming on Q7.(Q6 is for toggle bit; see toggle bit, Data# Polling, timing waveform)

**Figure 3. AUTOMATIC PROGRAMMING TIMING WAVEFORM**

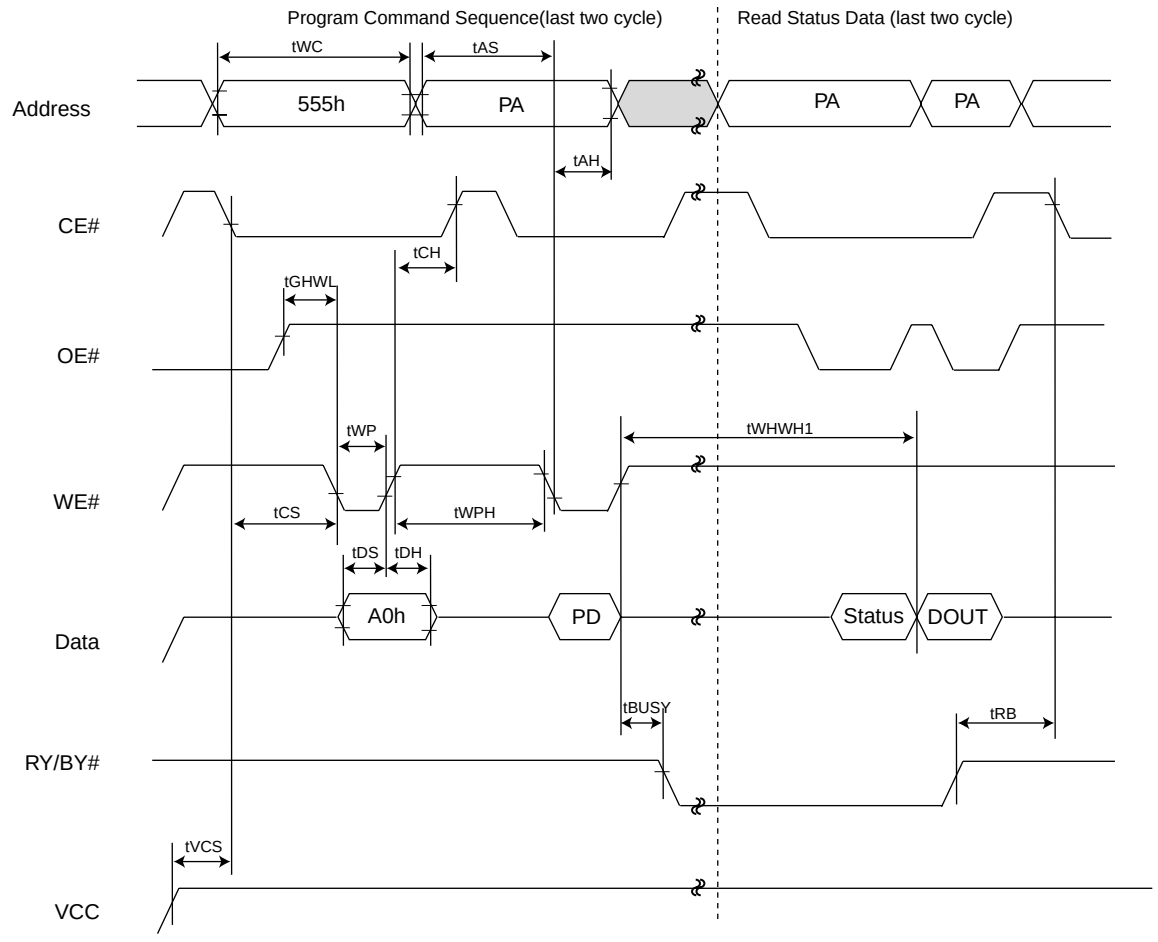


Note :

1.PA=Program Address, PD=Program Data, DOUT is the true data the program address

**Figure 4. AUTOMATIC PROGRAMMING ALGORITHM FLOWCHART**

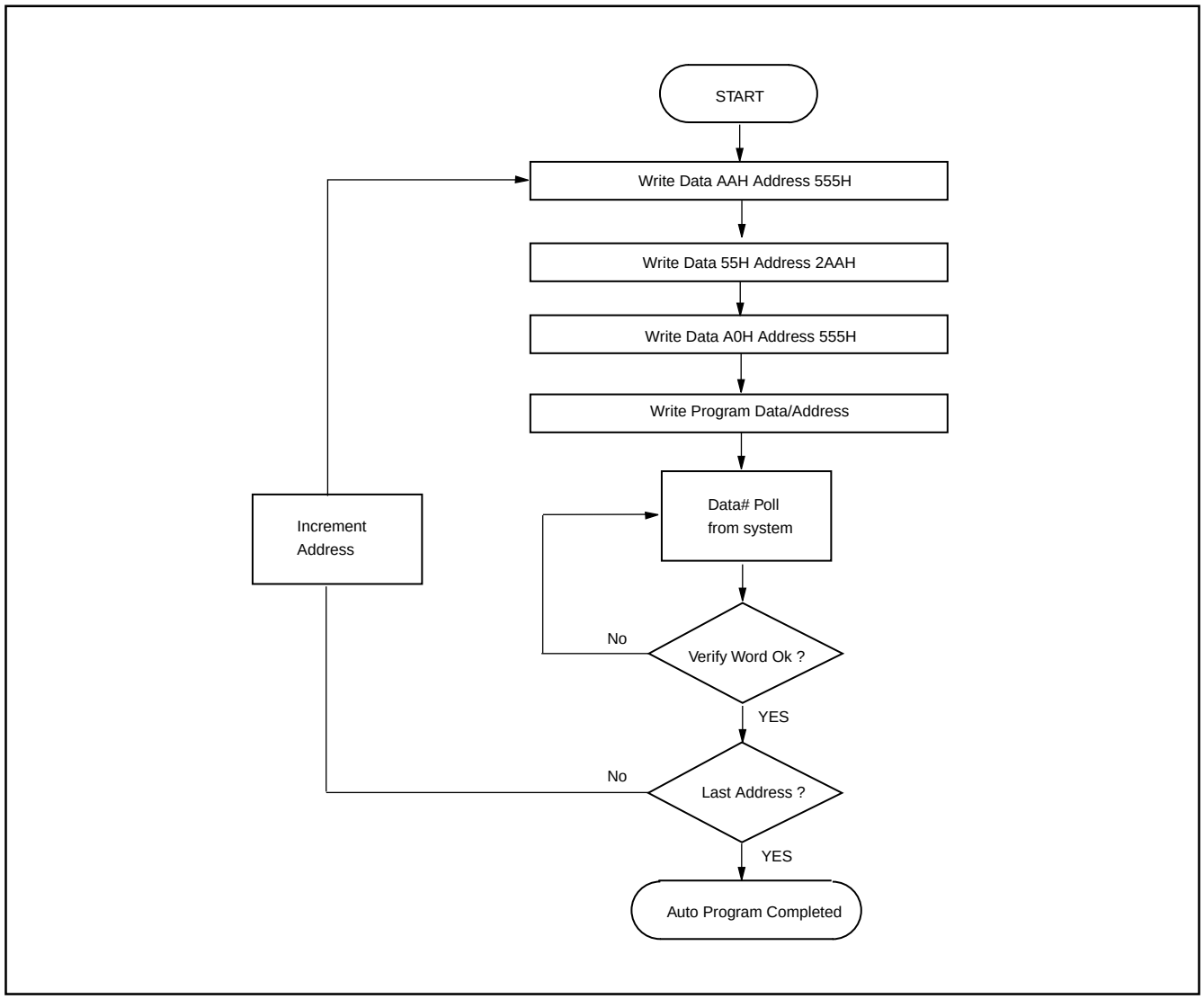

**Figure 5. CE# CONTROLLED WRITE TIMING WAVEFORM**

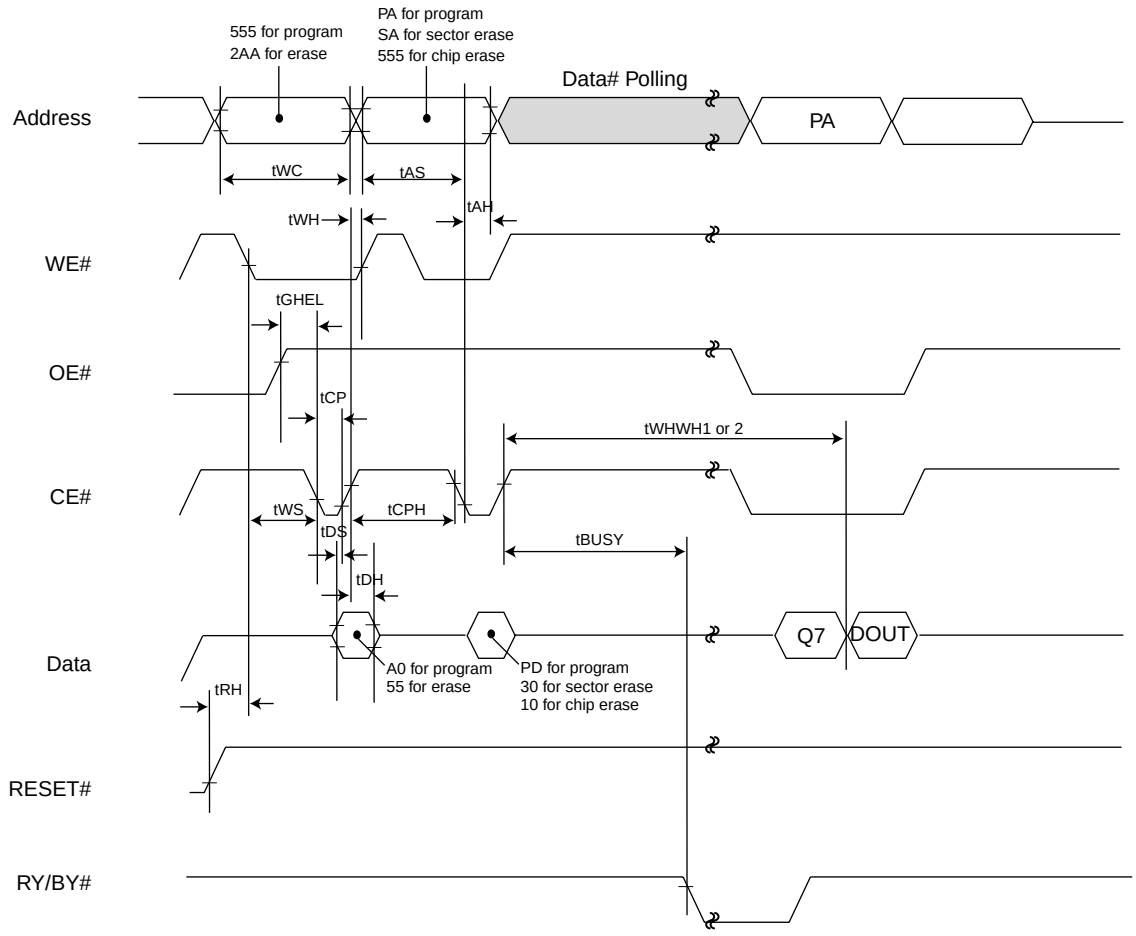


Notes:

1.PA=Program Address, PD=Program Data, DOUT=Data Out, Q7=complement of data written to device.
2.Figure indicates the last two bus cycles of the command sequence.

## AUTOMATIC CHIP ERASE TIMING WAVEFORM

All data in chip are erased. External erase verification is not required because data is verified automatically by internal control circuit. Erasure completion can be verified by Data# Polling or toggle bit checking after automatic erase starts. Device outputs 0 during erasure and 1 after erasure on Q7. (Q6 is for toggle bit; see toggle bit, Data# Polling, timing waveform)

**Figure 6. AUTOMATIC CHIP ERASE TIMING WAVEFORM**

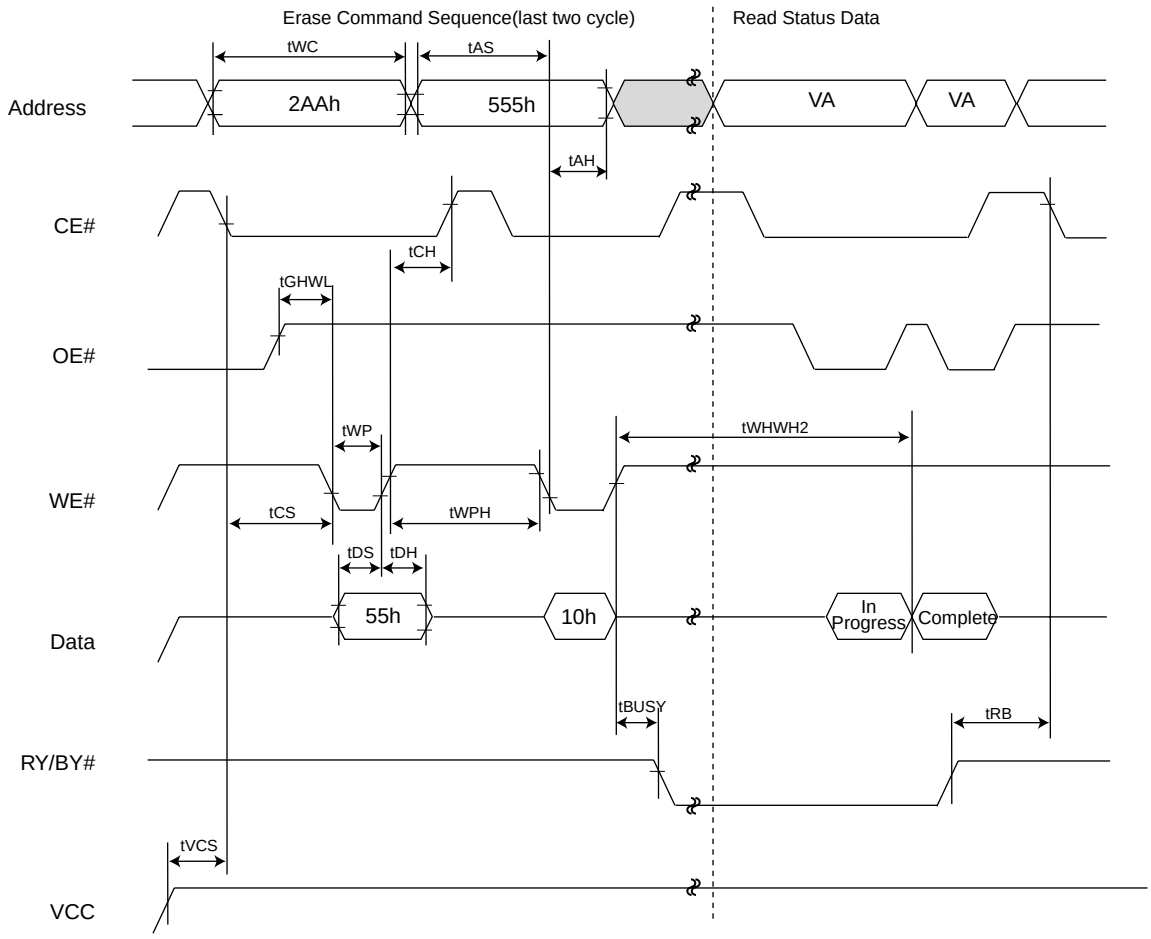


Note :
VA=Valid Address for reading status data(see "Write Operation Status").

**Figure 7. AUTOMATIC CHIP ERASE ALGORITHM FLOWCHART**

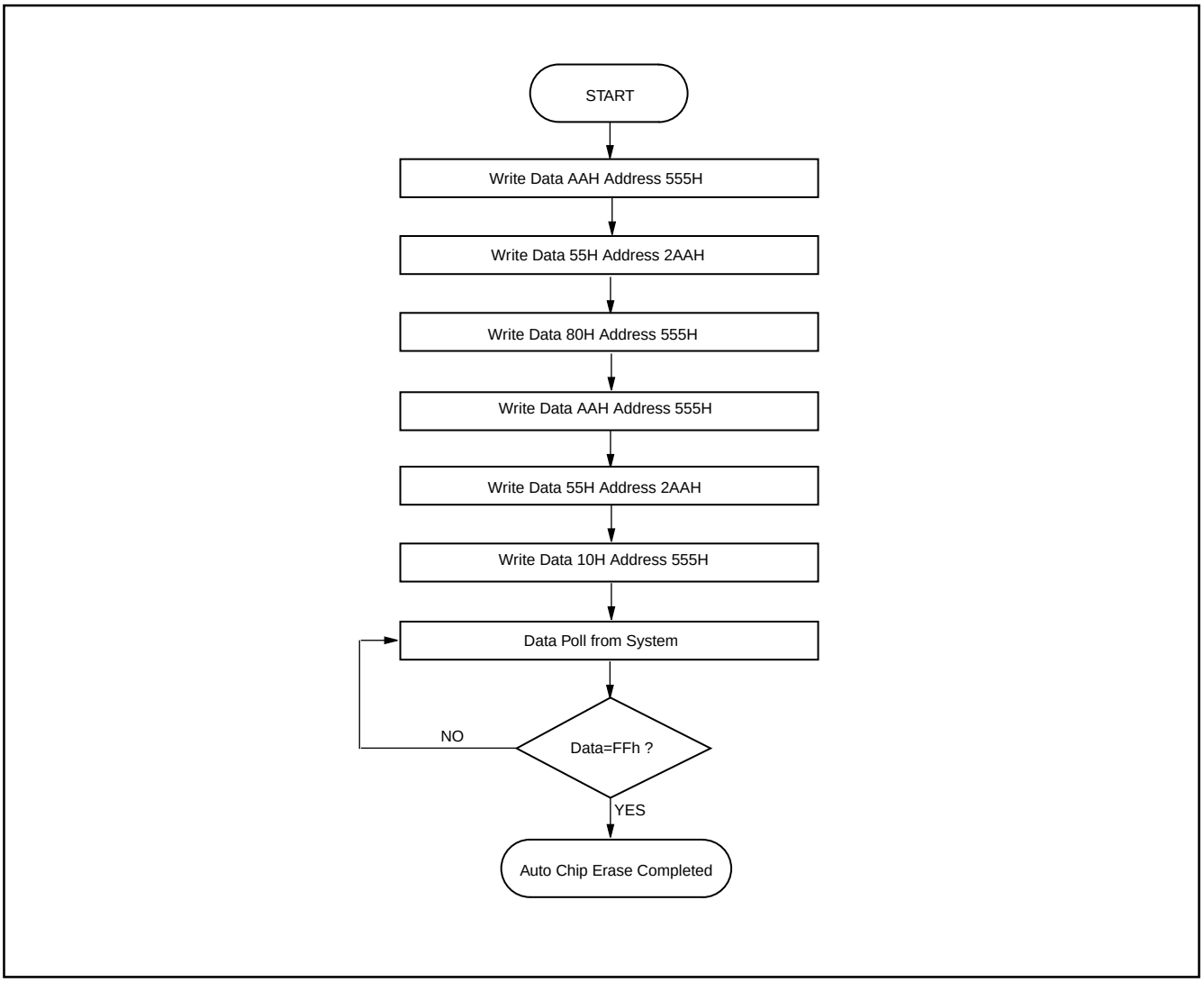

## AUTOMATIC SECTOR ERASE TIMING WAVEFORM

Sector indicated by A12 to A19 are erased. External erase verify is not required because data are verified automatically by internal control circuit. Erasure completion can be verified by Data# Polling or toggle bit checking after automatic erase starts. Device outputs 0 during erasure and 1 after erasure on Q7. (Q6 is for toggle bit; see toggle bit, Data# Polling, timing waveform)

**Figure 8. AUTOMATIC SECTOR ERASE TIMING WAVEFORM**

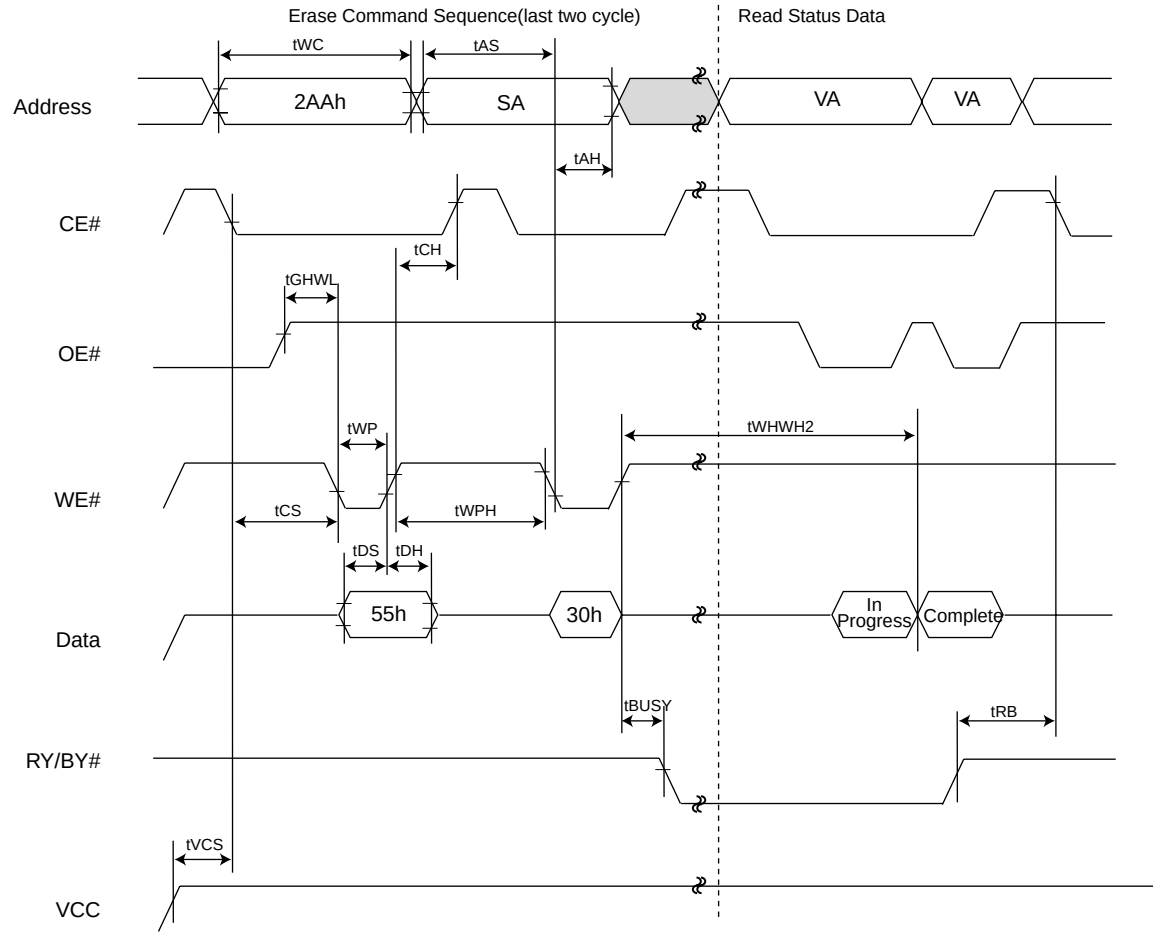


Note :
SA=sector address(for Sector Erase), VA=Valid Address for reading status data(see "Write Operation Status").

**Figure 9. AUTOMATIC SECTOR ERASE ALGORITHM FLOWCHART**

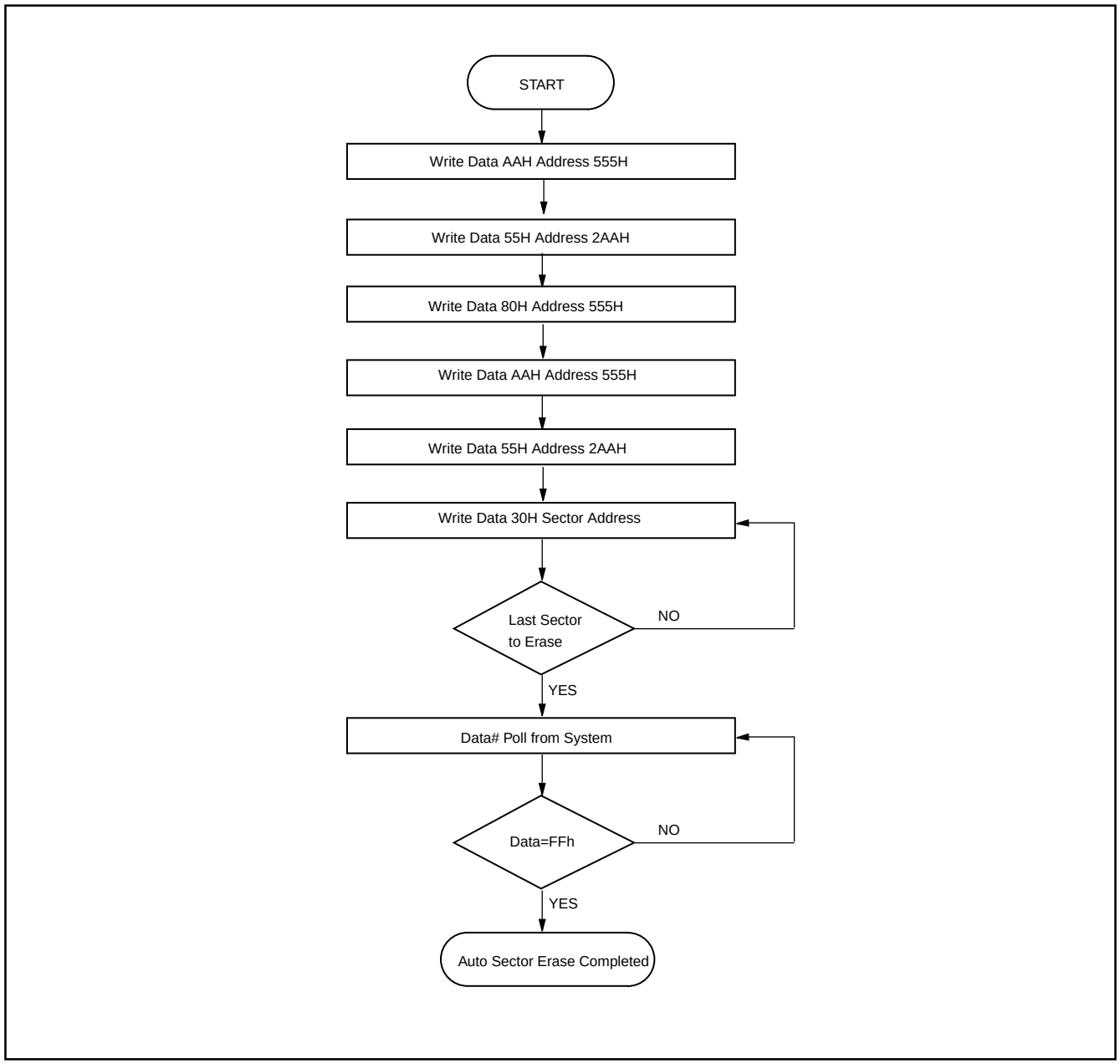

**Figure 10. ERASE SUSPEND/ERASE RESUME FLOWCHART**

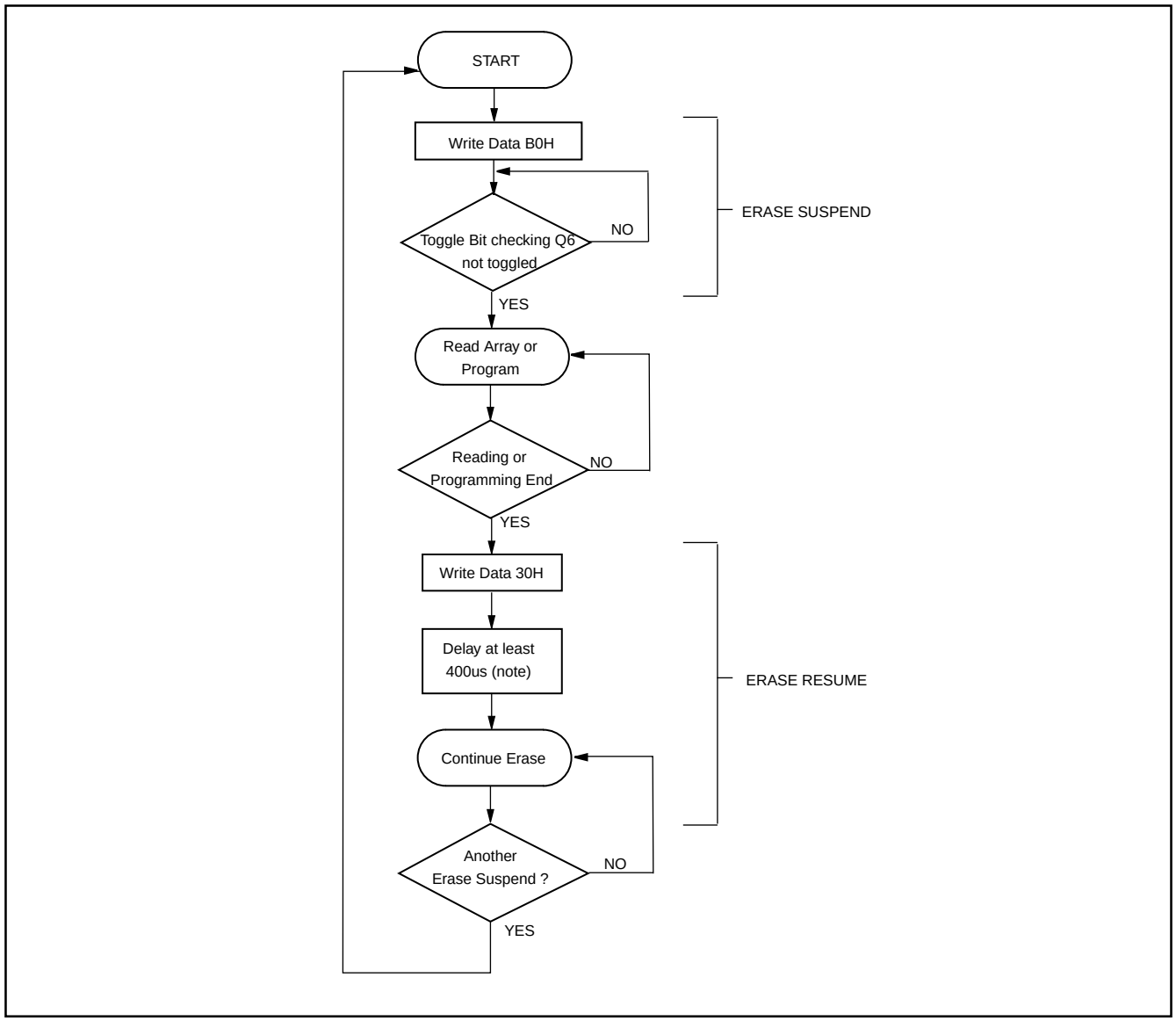


Note: Repeatedly suspending the device more often may have undetermined effects.

**Figure 11. IN-SYSTEM SECTOR PROTECT/CHIP UNPROTECT TIMING WAVEFORM (RESET# Control)**

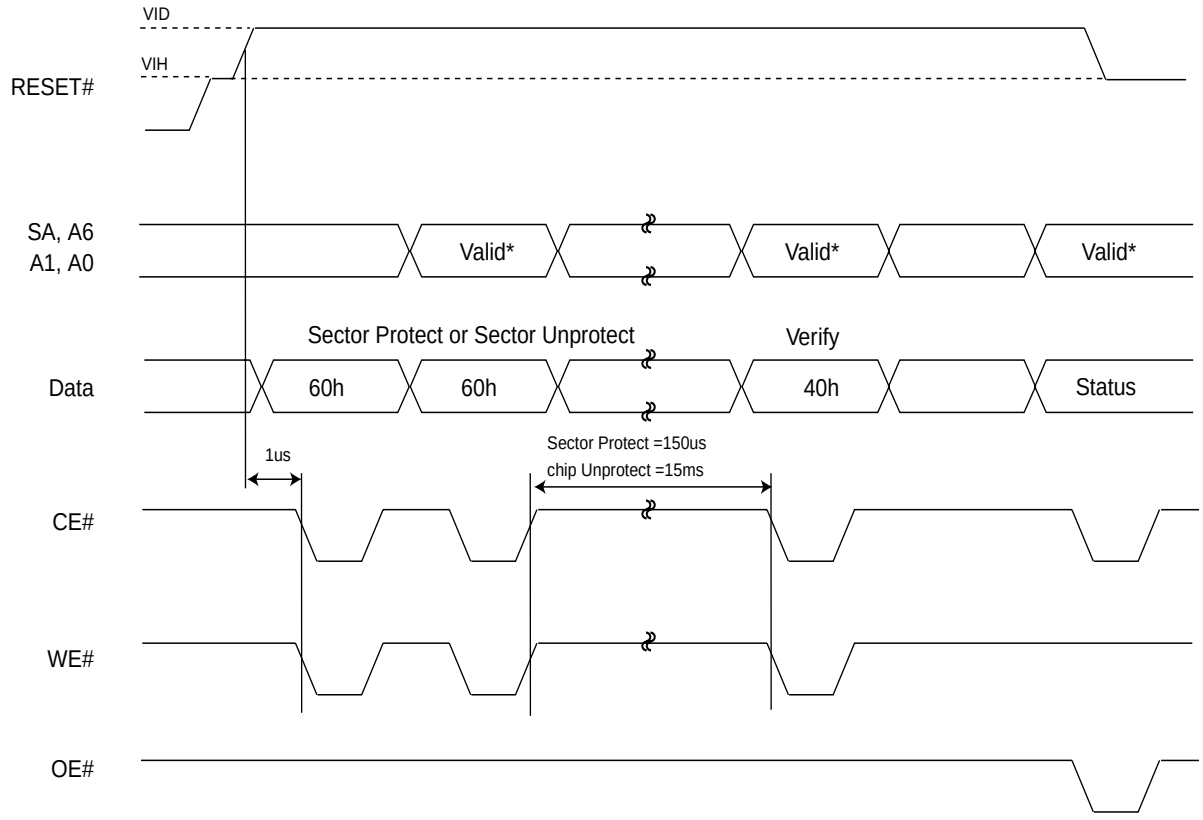


Note: When sector protect, A6=0, A1=1, A0=0. When chip unprotect, A6=1, A1=1, A0=0.

**Figure 12. SECTOR PROTECT TIMING WAVEFORM (A9, OE# Control)**

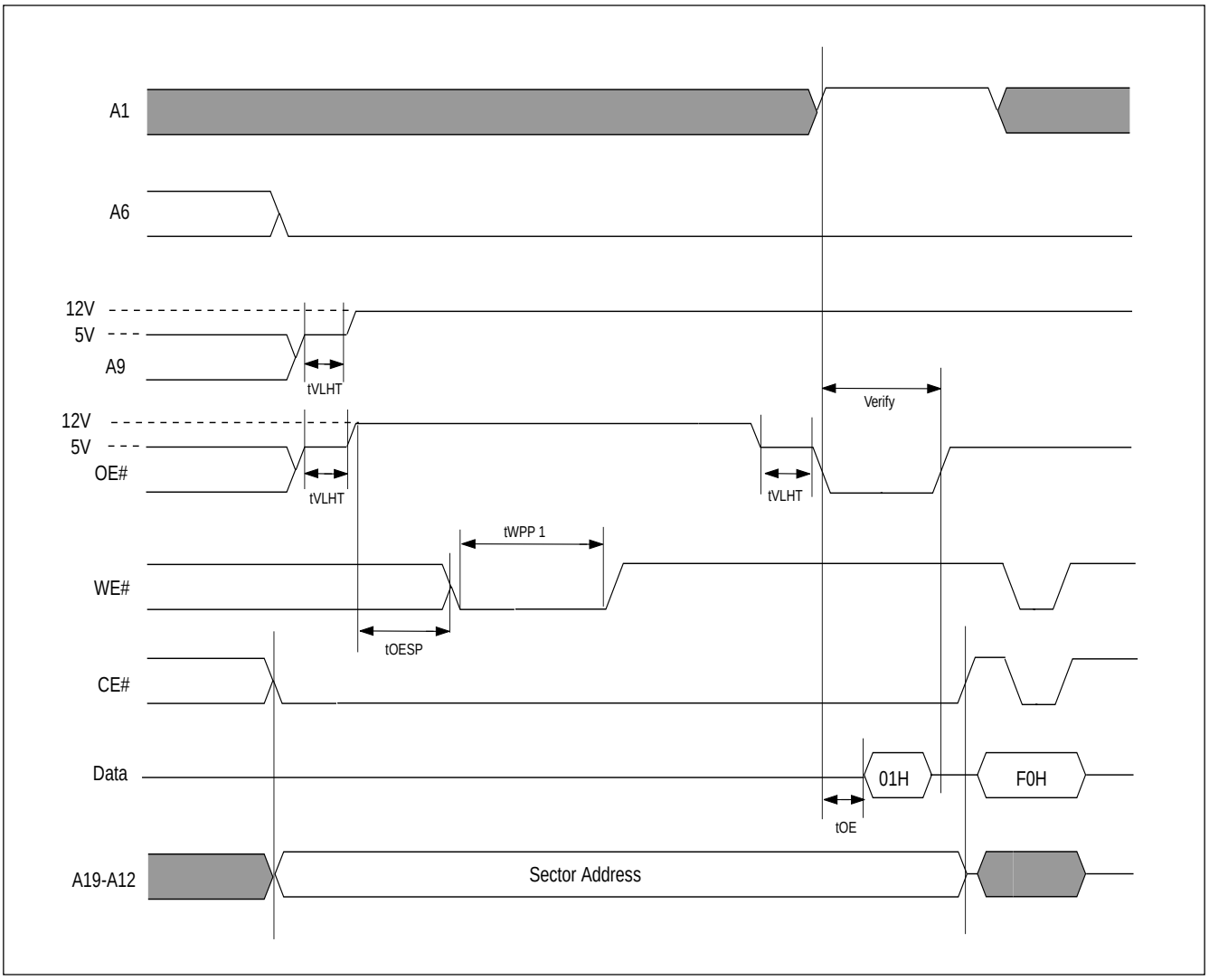


Notes: tVLHT (Voltage transition time)=4us min.
tOESP (OE# setup time to WE# active)=4us min.

**Figure 13. SECTOR PROTECTION ALGORITHM (A9, OE# Control)**

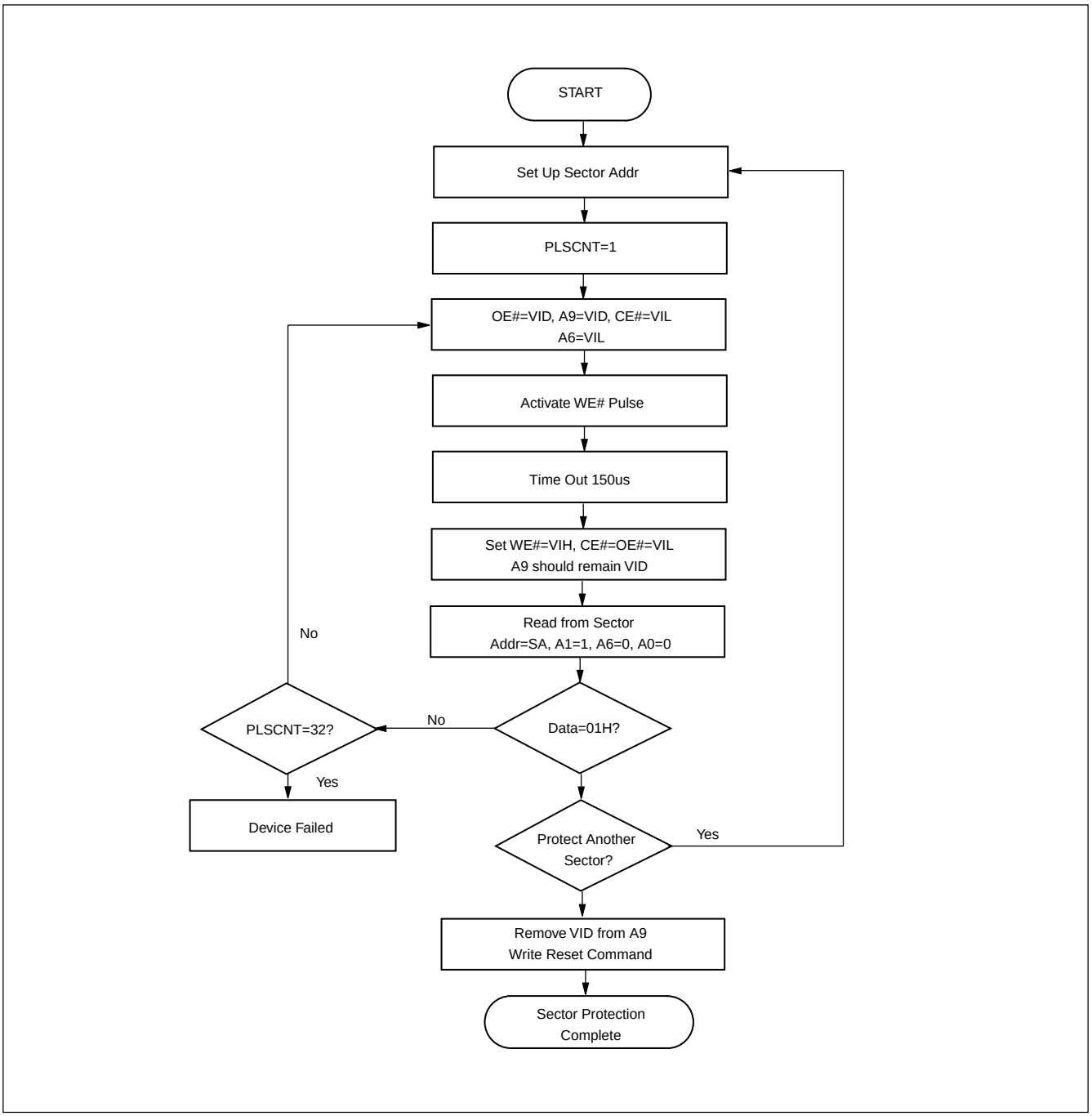

**Figure 14. IN-SYSTEM SECTOR PROTECTION ALGORITHM WITH RESET#=VID**

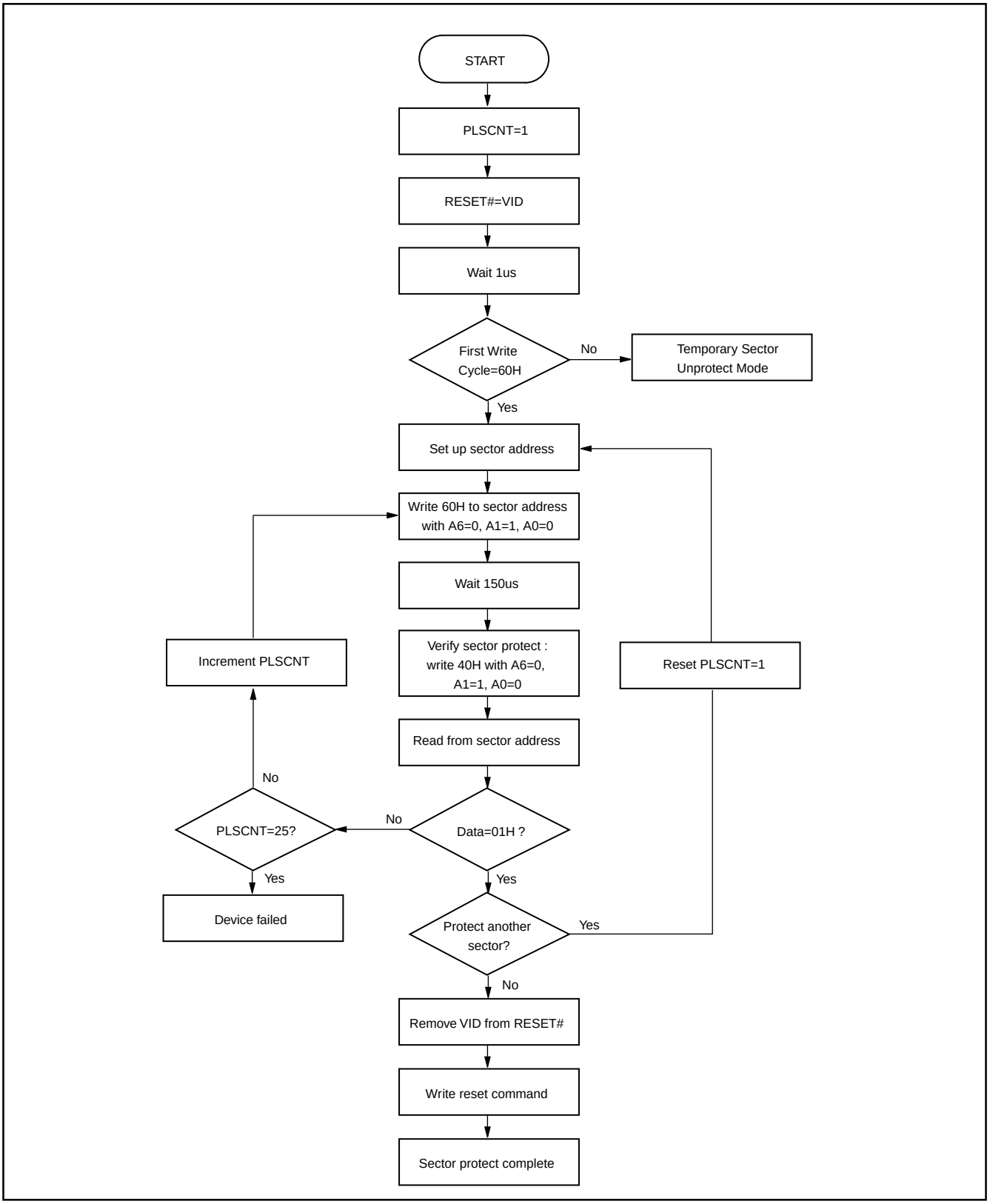

**Figure 15. IN-SYSTEM CHIP UNPROTECTION ALGORITHM WITH RESET#=VID**

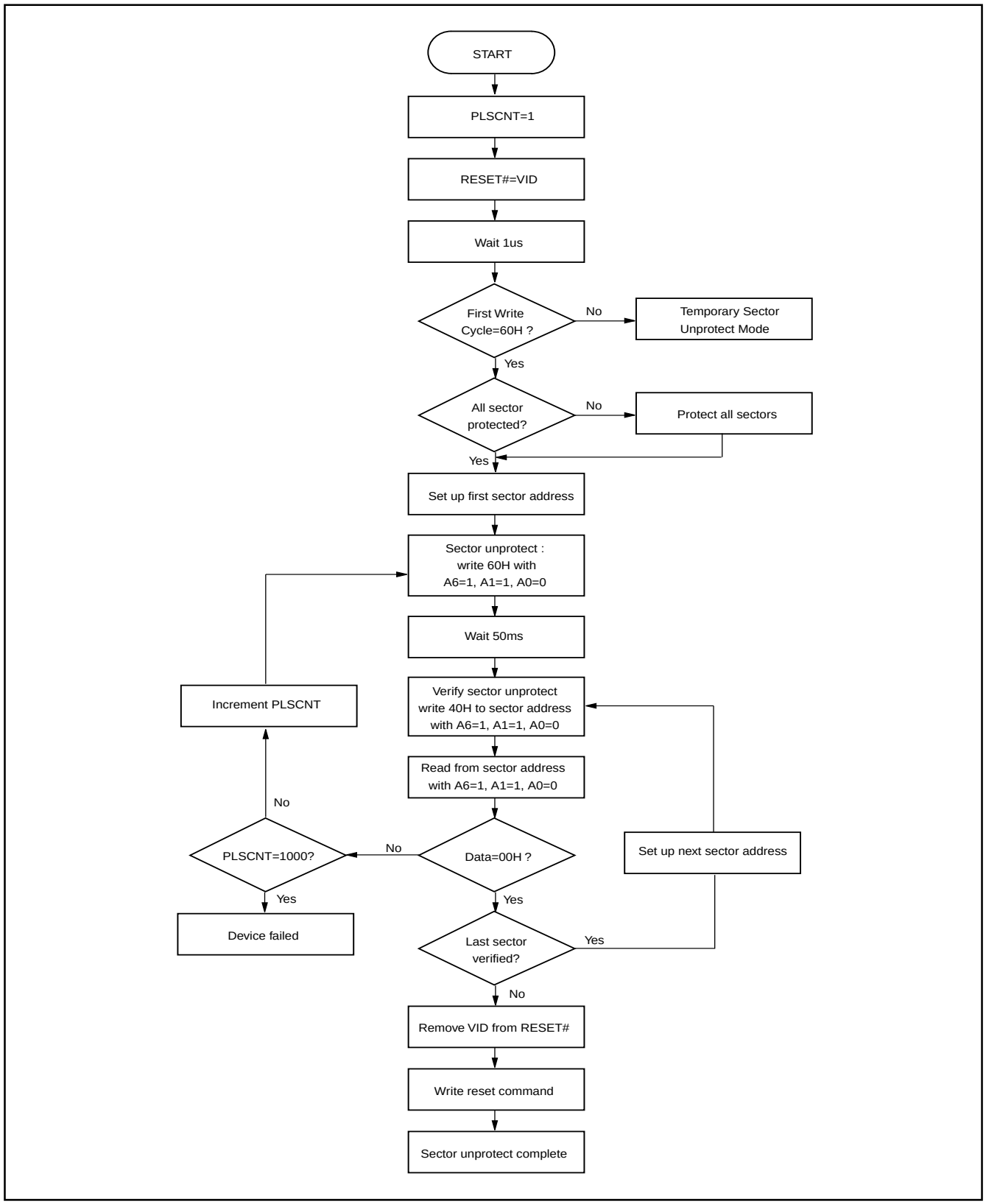

**Figure 16. TIMING WAVEFORM FOR CHIP UNPROTECTION (A9, OE# Control)**

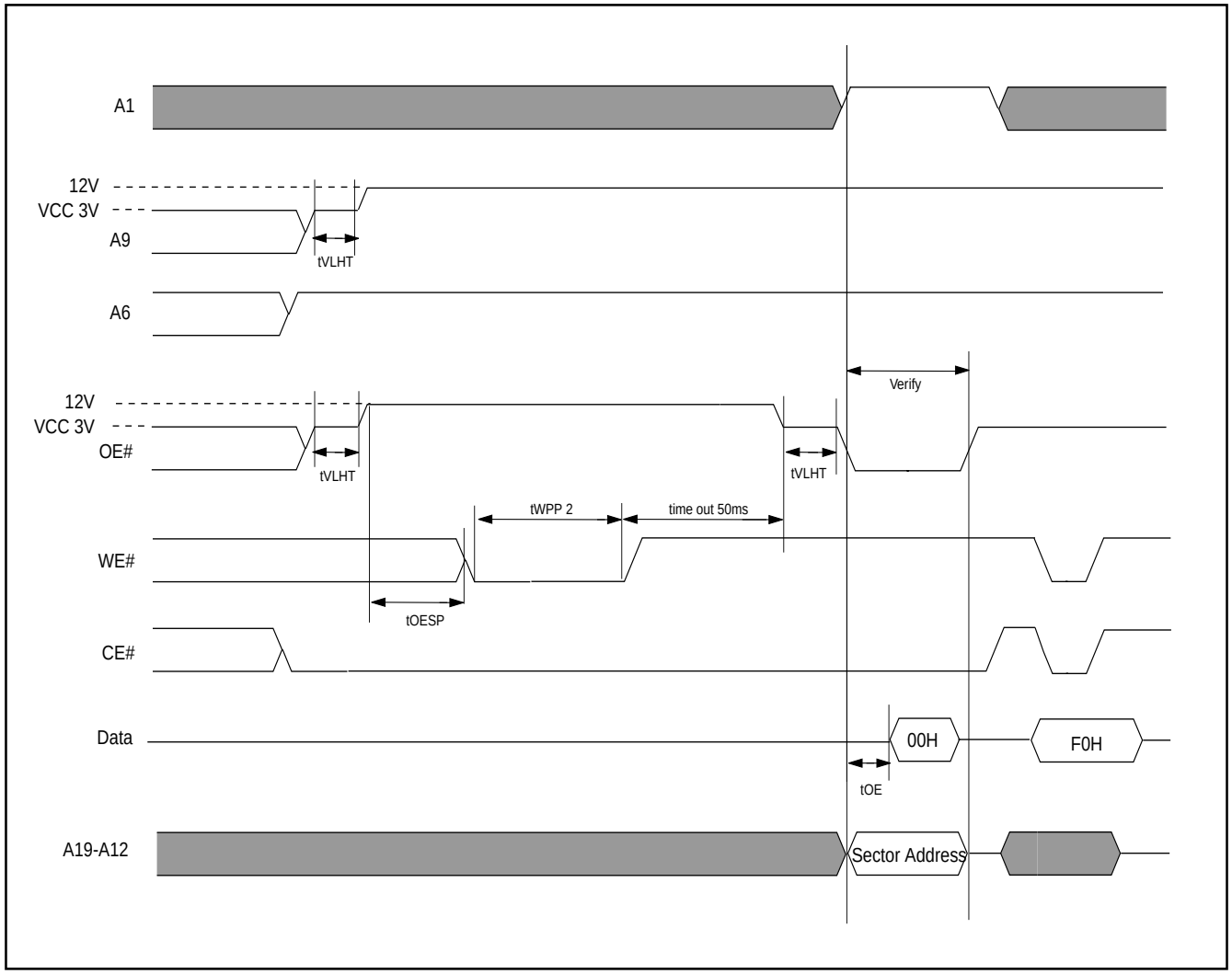


Note: Repeatedly suspending the device more often may have undetermined effects.

**Figure 17. CHIP UNPROTECTION ALGORITHM (A9, OE# Control)**

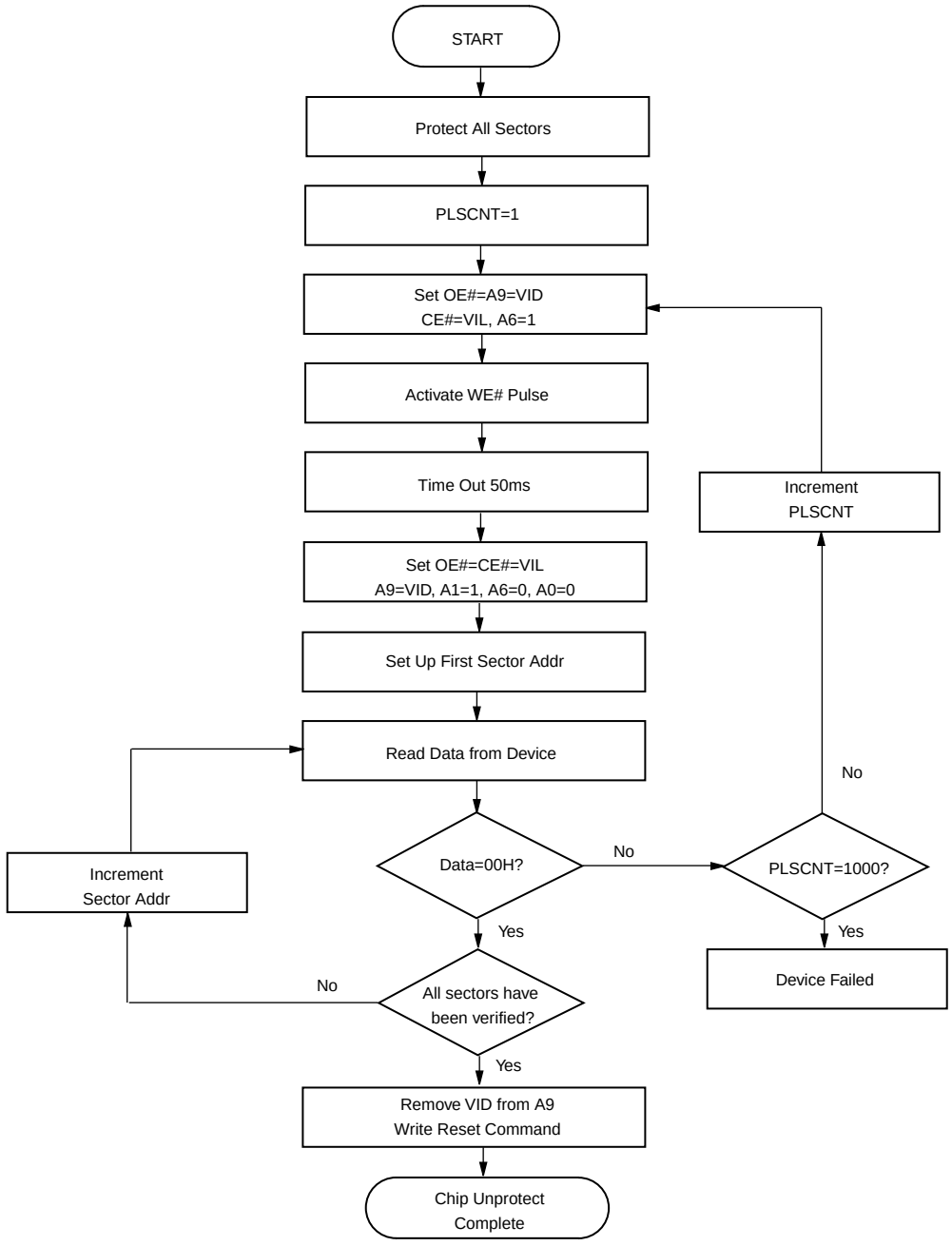


* It is recommended before unprotect whole chip, all sectors should be protected in advance.

## WRITE OPERATION STATUS

**Figure 18. DATA# POLLING ALGORITHM**

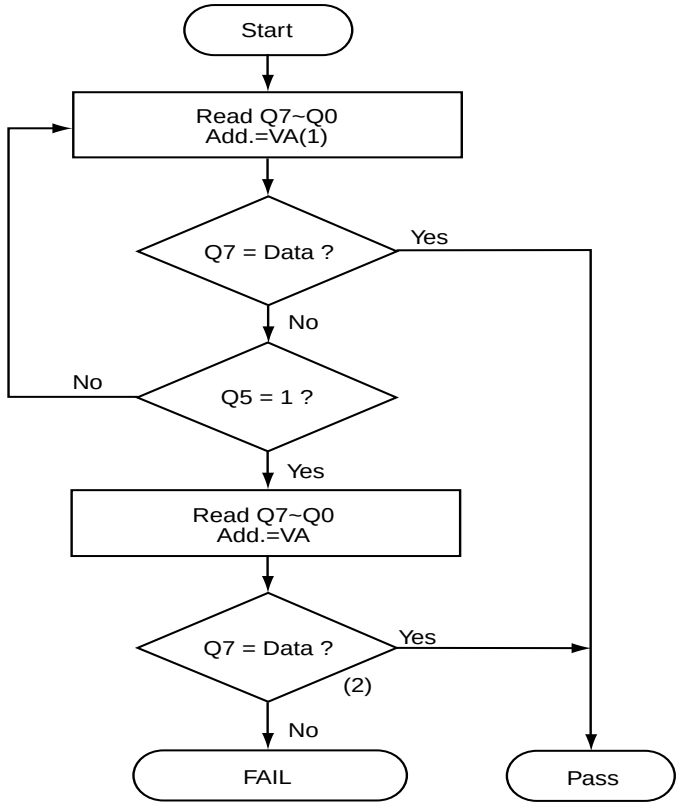


Notes : 1.VA=Valid address for programming or erasure.
2.Q7 should be re-checked even Q5="1" because Q7 may change simultaneously with Q5.

**Figure 19. TOGGLE BIT ALGORITHM**

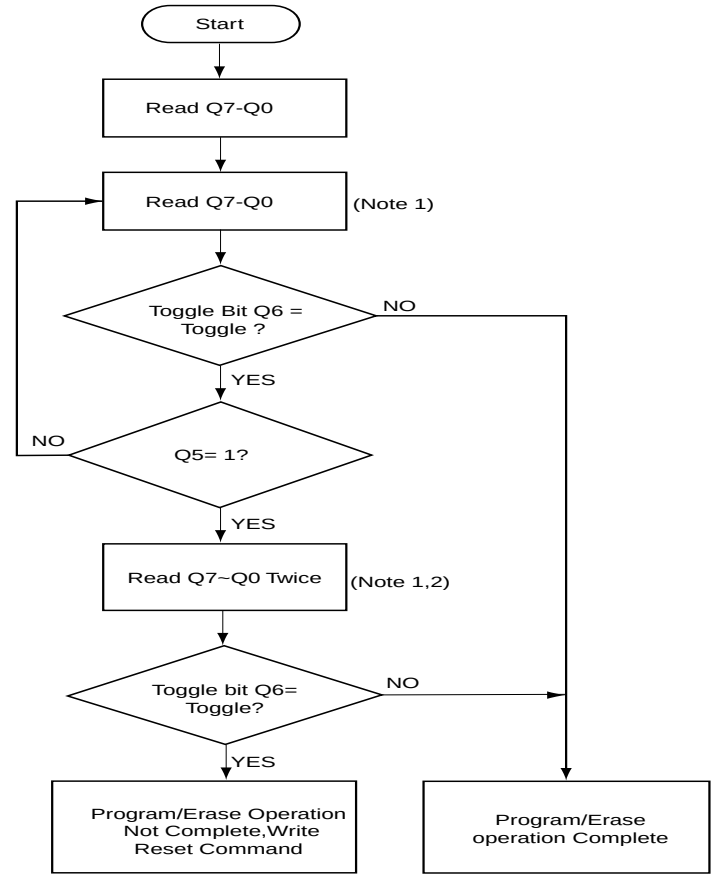


Notes:1. Read toggle bit twice to determine whether or not it is toggling.
2. Recheck toggle bit because it may stop toggling as Q5 change to "1".

**Figure 20. Data# Polling Timings (During Automatic Algorithms)**

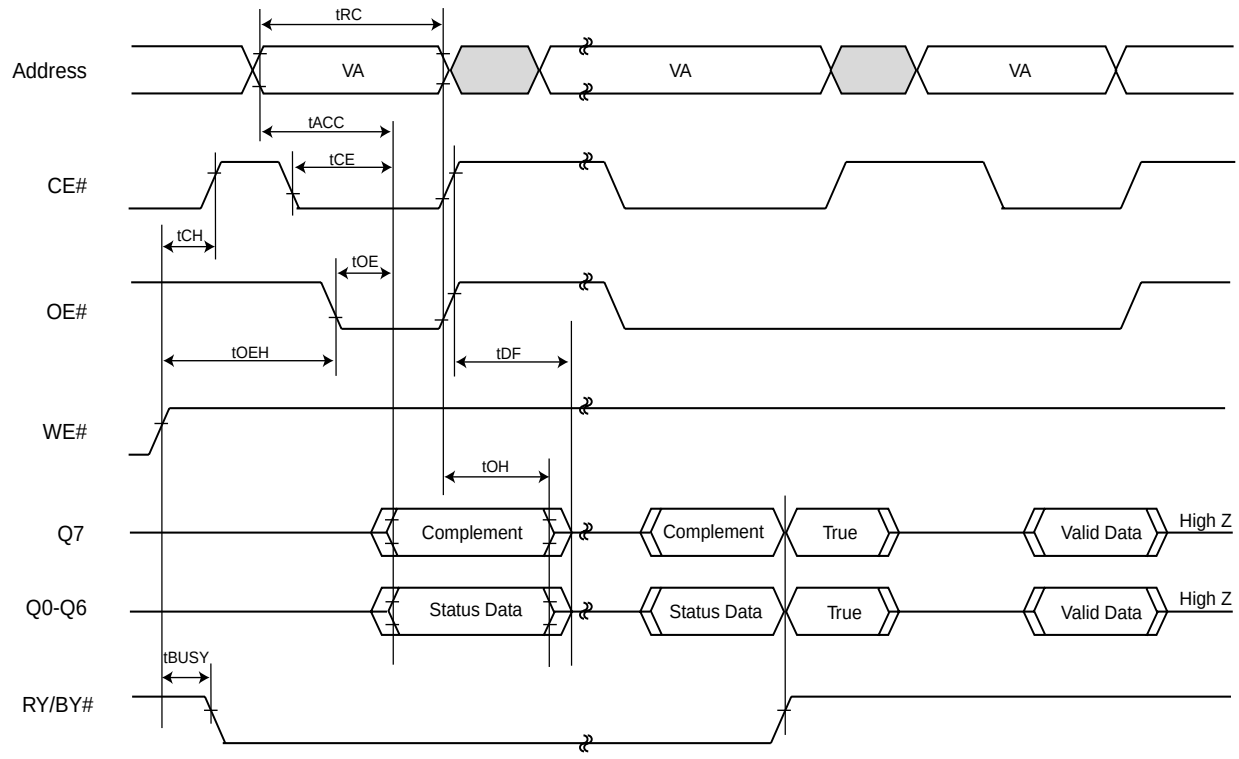


Note :

VA=Valid address. Figure shows are first status cycle after command sequence, last status read cycle, and array data read cycle.

**Figure 21. TOGGLE BIT TIMING WAVEFORMS (DURING AUTOMATIC ALGORITHMS)**

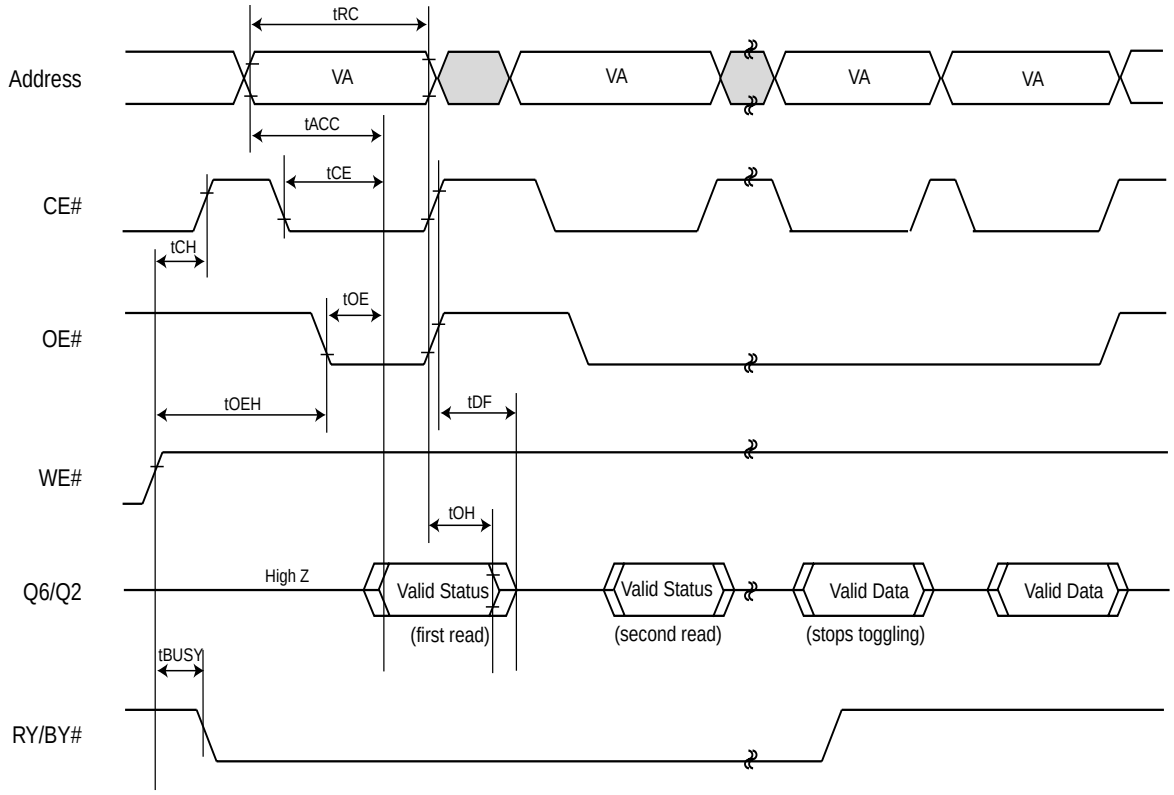


Note:
VA=Valid address; not required for Q6. Figure shows first two status cycle after command sequence, last status read cycle, and array data read cycle.

**Table 13. AC CHARACTERISTICS**

| Parameter Std | Description | Test Setup | All Speed Options | Unit |
|---|---|---|---|---|
| tREADY1 | RESET# PIN Low (During Automatic Algorithms) to Read or Write (See Note) | MAX | 20 | us |
| tREADY2 | RESET# PIN Low (NOT During Automatic Algorithms) to Read or Write (See Note) | MAX | 500 | ns |
| tRP | RESET# Pulse Width (During Automatic Algorithms) | MIN | 500 | ns |
| tRH | RESET# High Time Before Read (See Note) | MIN | 70 | ns |
| tRB | RY/BY# Recovery Time (to CE#, OE# go low) | MIN | 0 | ns |

Note:Not 100% tested

**Figure 22. RESET# TIMING WAVEFORM**

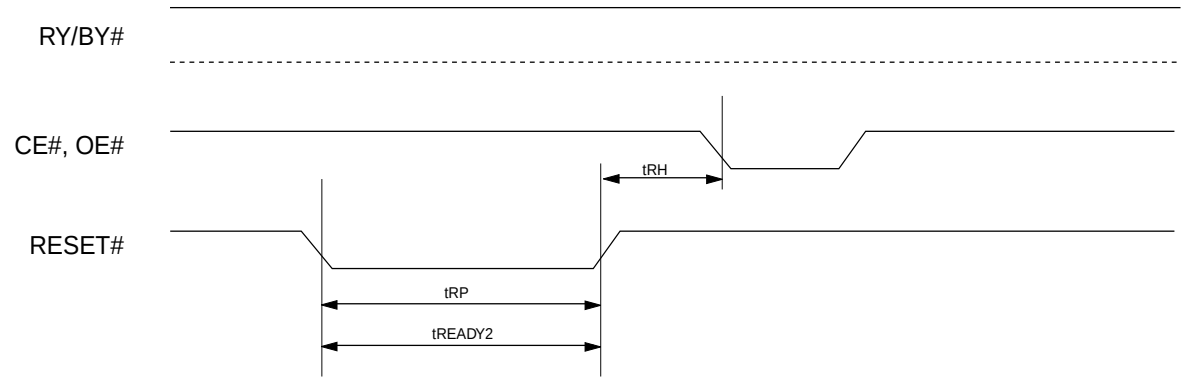


Reset Timing NOT during Automatic Algorithms

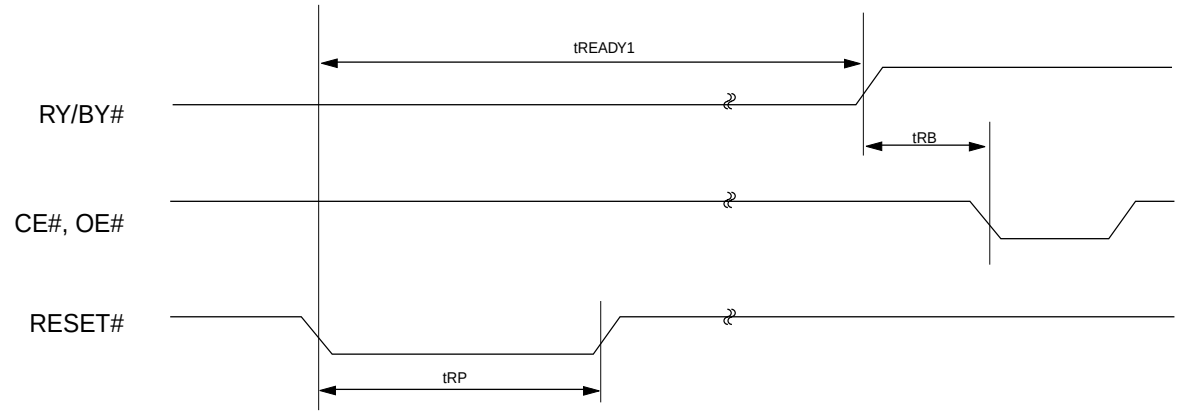


Reset Timing during Automatic Algorithms

## AC CHARACTERISTICS

### WORD/BYTE CONFIGURATION (BYTE#)

| Parameter | | Description | | Speed Options | | | Unit |
|---|---|---|---|---|---|---|---|
| JEDEC | Std | | | -55 | -70 | -90 | |
| | tELFL/tELFH | CE# to BYTE# Switching Low or High | Max | | 5 | | ns |
| | tFLQZ | BYTE# Switching Low to Output HIGH Z | Max | 25 | 25 | 30 | ns |
| | tFHQV | BYTE# Switching High to Output Active | Min | 55 | 70 | 90 | ns |

**Figure 23. BYTE# TIMING WAVEFORM FOR READ OPERATIONS (BYTE# switching from byte mode to word mode)**

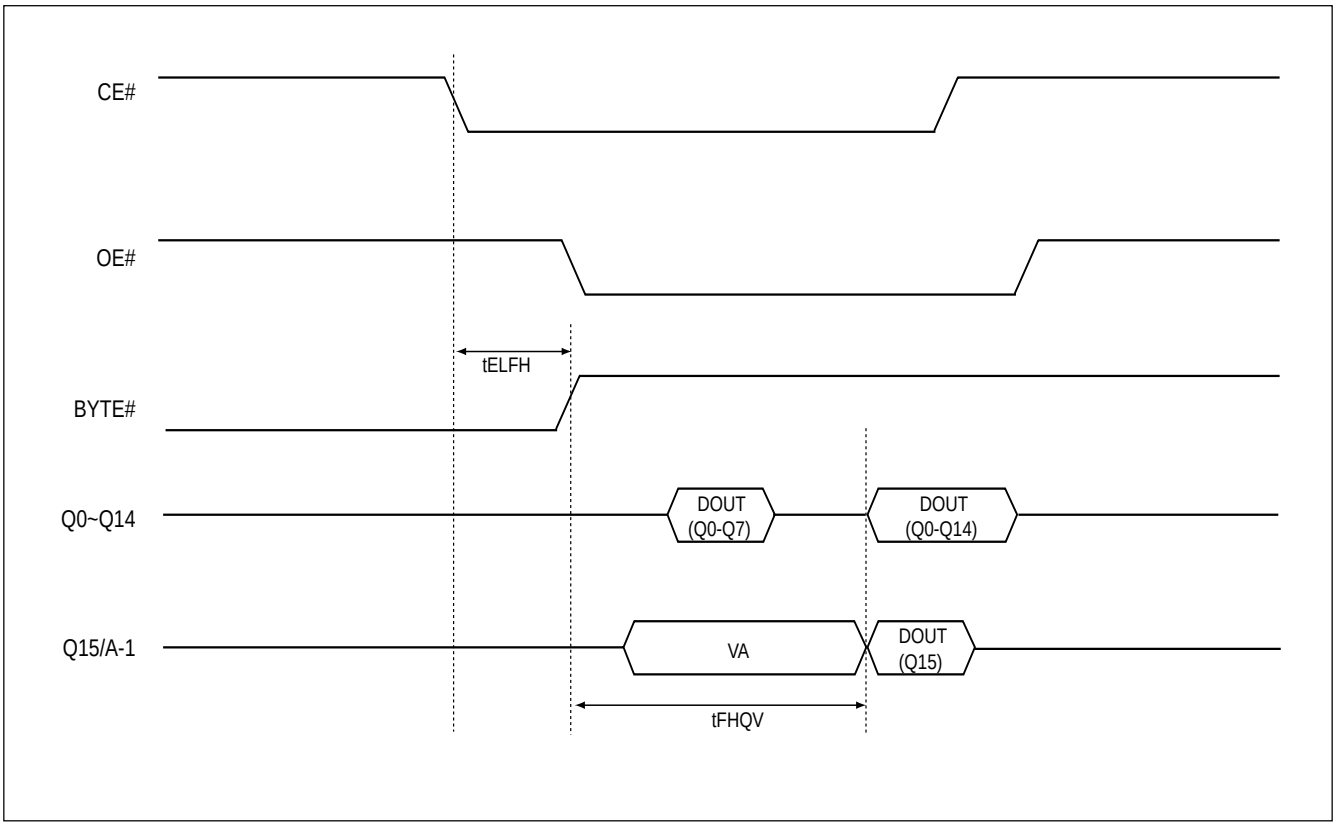

**Figure 24. BYTE# TIMING WAVEFORM FOR READ OPERATIONS (BYTE# switching from word mode to byte mode)**

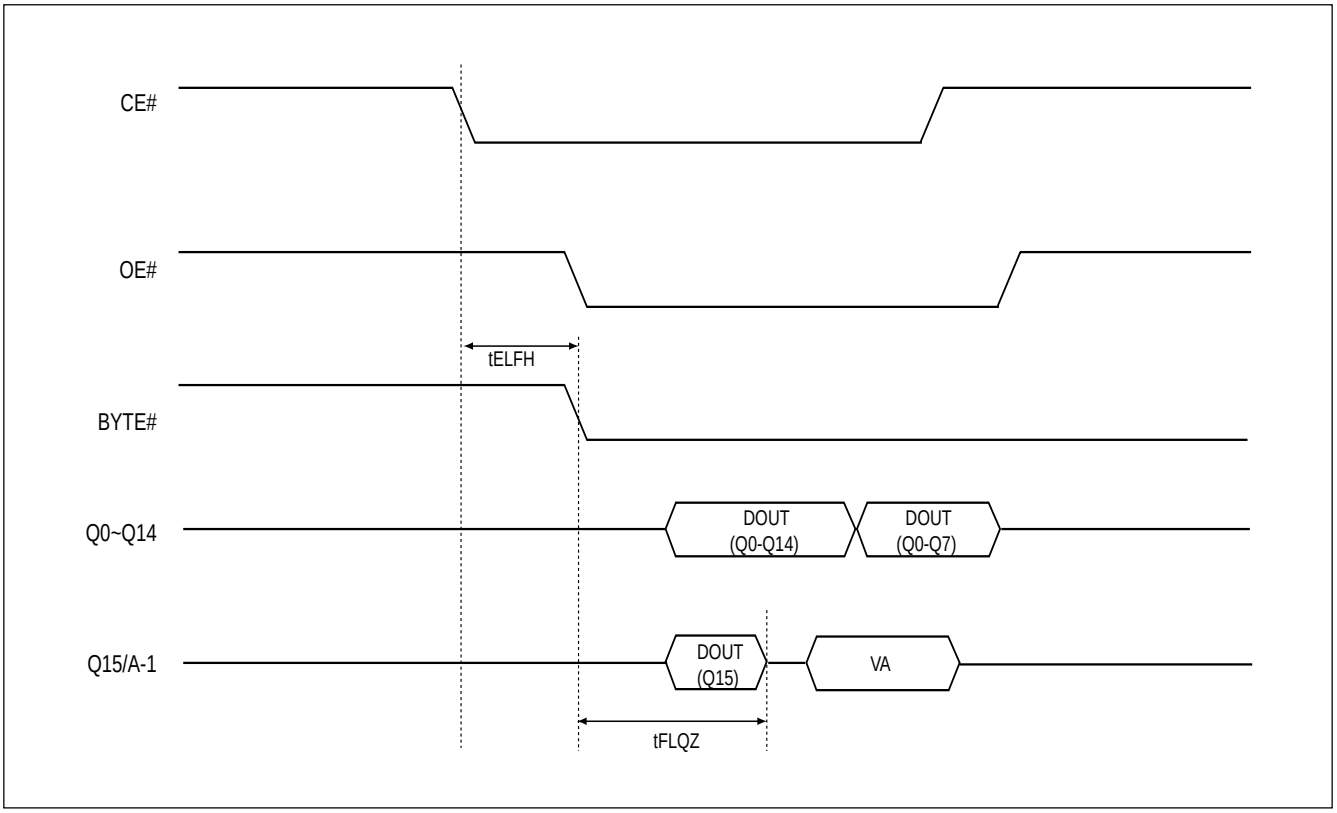


**Figure 25. BYTE# TIMING WAVEFORM FOR PROGRAM OPERATIONS**

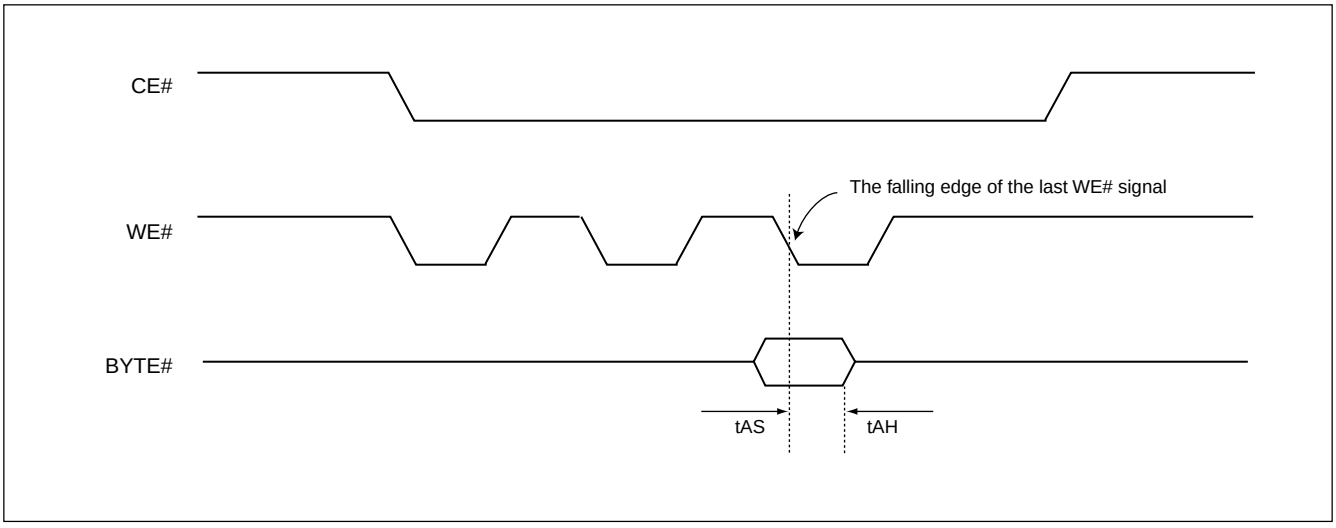

**Table 14. TEMPORARY SECTOR UNPROTECT**

| Parameter Std. | Description | Test Setup | All Speed Options | Unit |
|---|---|---|---|---|
| tVIDR | VID Rise and Fall Time (See Note) | Min | 500 | ns |
| tRSP | RESET# Setup Time for Temporary Sector Unprotect | Min | 4 | us |

Note:
Not 100% tested

**Figure 26. TEMPORARY SECTOR UNPROTECT TIMING DIAGRAM**

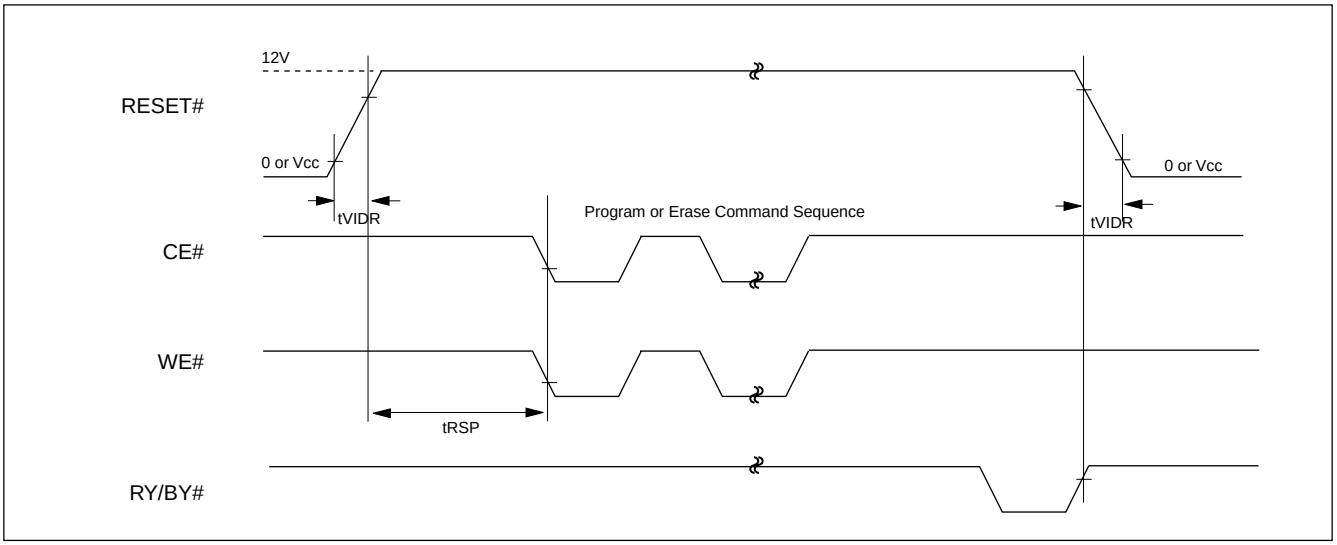


**Figure 27. Q6 vs Q2 for Erase and Erase Suspend Operations**

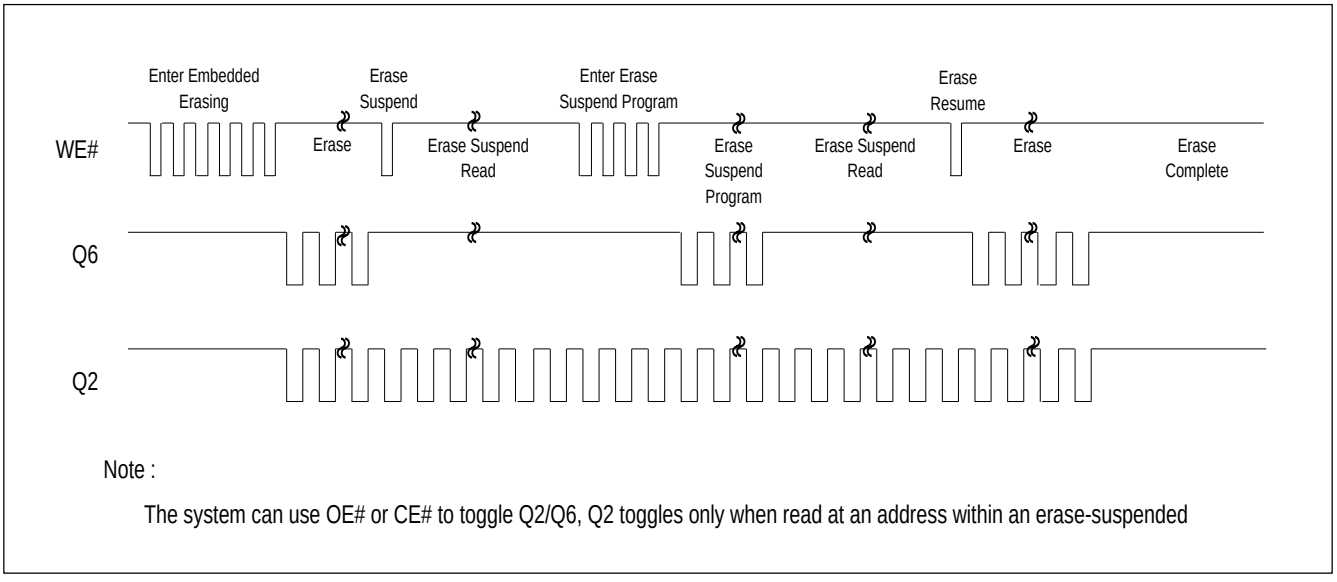


Note :

The system can use OE# or CE# to toggle Q2/Q6, Q2 toggles only when read at an address within an erase-suspended

**Figure 28. TEMPORARY SECTOR UNPROTECT ALGORITHM**

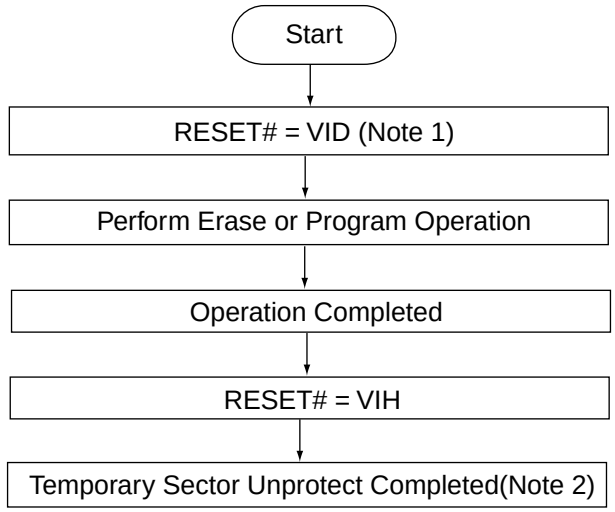


Notes : 1. All protected sectors are temporary unprotected.
VID=11.5V~12.5V

2. All previously protected sectors are protected again.

**Figure 29. ID CODE READ TIMING WAVEFORM**

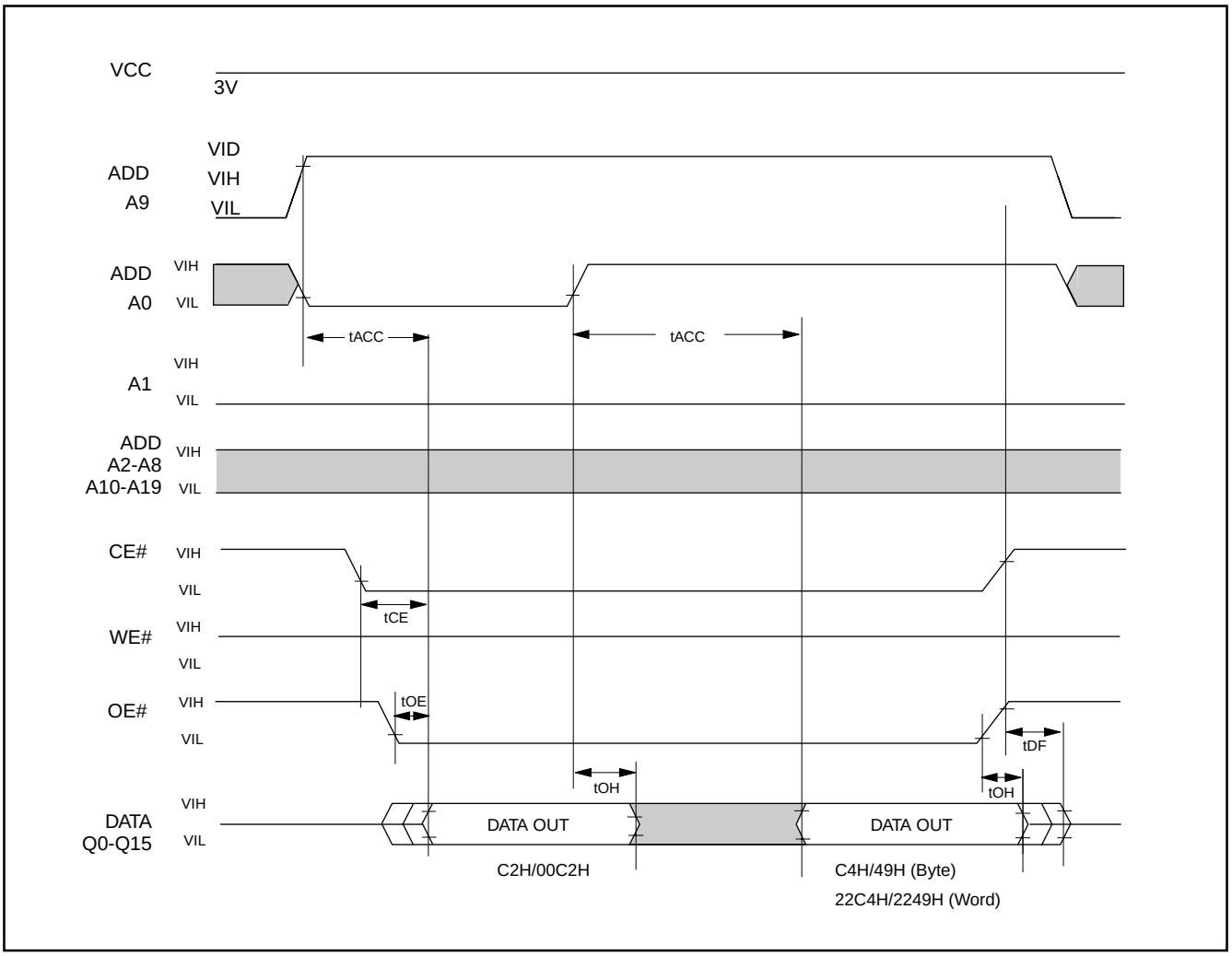

## RECOMMENDED OPERATING CONDITIONS

### At Device Power-Up

AC timing illustrated in Figure A is recommended for the supply voltages and the control signals at device power-up. If the timing in the figure is ignored, the device may not operate correctly.

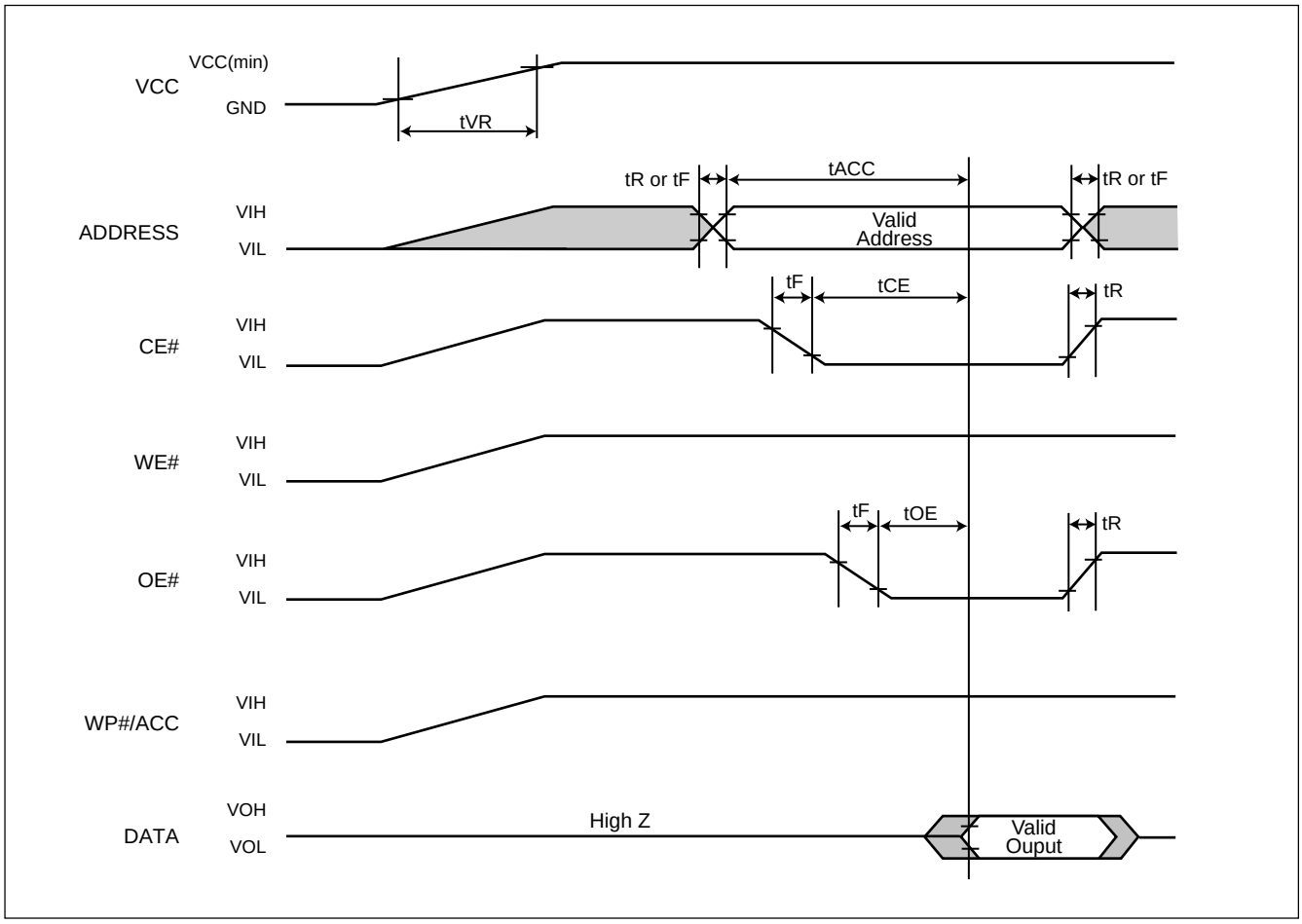


**Figure A. AC Timing at Device Power-Up**

| Symbol | Parameter | Notes | Min. | Max. | Unit |
|---|---|---|---|---|---|
| tVR | VCC Rise Time | 1 | 20 | 500000 | us/V |
| tR | Input Signal Rise Time | 1,2 | | 20 | us/V |
| tF | Input Signal Fall Time | 1,2 | | 20 | us/V |

Notes :
1. Sampled, not 100% tested.
2. This specification is applied for not only the device power-up but also the normal operations.

## ERASE AND PROGRAMMING PERFORMANCE (1)

| PARAMETER | | LIMITS MIN. | TYP.(2) | MAX.(3) | UNITS |
|---|---|---|---|---|---|
| Sector Erase Time | | | 0.7 | 15 | sec |
| Chip Erase Time | | | 15 | 30 | sec |
| Byte Programming Time | | | 9 | 300 | us |
| Word Programming Time | | | 11 | 360 | us |
| Chip Programming Time | Byte Mode | | 18 | 54 | sec |
| | Word Mode | | 12 | 36 | sec |
| Erase/Program Cycles | | 100,000 | | | Cycles |

Note: 1. Not 100% Tested, Excludes external system level over head.
2. Typical values measured at 25° C, 3V.
3. Maximum values measured at 85° C, 2.7V, 100,000 cycles.

## LATCH-UP CHARACTERISTICS

| | MIN. | MAX. |
|---|---|---|
| Input Voltage with respect to GND on all pins except I/O pins | -1.0V | 12.5V |
| Input Voltage with respect to GND on all I/O pins | -1.0V | VCC + 1.0V |
| VCC Current | -100mA | +100mA |
| Includes all pins except VCC. Test conditions: VCC = 3.0V, one pin at a time. | | |

## ORDERING INFORMATION

| PART NO. | ACCESS TIME (ns) | OPERATING Current MAX. (mA) | STANDBY Current MAX. (uA) | PACKAGE | Remark |
|---|---|---|---|---|---|
| MX29LV160CTMC-55R | 55 | 30 | 5 | 44 Pin SOP | |
| MX29LV160CBMC-55R | 55 | 30 | 5 | 44 Pin SOP | |
| MX29LV160CTMC-70 | 70 | 30 | 5 | 44 Pin SOP | |
| MX29LV160CBMC-70 | 70 | 30 | 5 | 44 Pin SOP | |
| MX29LV160CTMC-90 | 90 | 30 | 5 | 44 Pin SOP | |
| MX29LV160CBMC-90 | 90 | 30 | 5 | 44 Pin SOP | |
| MX29LV160CTMI-55R | 55 | 30 | 5 | 44 Pin SOP | |
| MX29LV160CBMI-55R | 55 | 30 | 5 | 44 Pin SOP | |
| MX29LV160CTMI-70 | 70 | 30 | 5 | 44 Pin SOP | |
| MX29LV160CBMI-70 | 70 | 30 | 5 | 44 Pin SOP | |
| MX29LV160CTMI-90 | 90 | 30 | 5 | 44 Pin SOP | |
| MX29LV160CBMI-90 | 90 | 30 | 5 | 44 Pin SOP | |
| MX29LV160CTTC-55R | 55 | 30 | 5 | 48 Pin TSOP (Normal Type) | |
| MX29LV160CBTC-55R | 55 | 30 | 5 | 48 Pin TSOP (Normal Type) | |
| MX29LV160CTTC-70 | 70 | 30 | 5 | 48 Pin TSOP (Normal Type) | |
| MX29LV160CBTC-70 | 70 | 30 | 5 | 48 Pin TSOP (Normal Type) | |
| MX29LV160CTTC-90 | 90 | 30 | 5 | 48 Pin TSOP (Normal Type) | |
| MX29LV160CBTC-90 | 90 | 30 | 5 | 48 Pin TSOP (Normal Type) | |
| MX29LV160CTTI-55R | 55 | 30 | 5 | 48 Pin TSOP (Normal Type) | |
| MX29LV160CBTI-55R | 55 | 30 | 5 | 48 Pin TSOP (Normal Type) | |
| MX29LV160CTTI-70 | 70 | 30 | 5 | 48 Pin TSOP (Normal Type) | |
| MX29LV160CBTI-70 | 70 | 30 | 5 | 48 Pin TSOP (Normal Type) | |
| MX29LV160CTTI-90 | 90 | 30 | 5 | 48 Pin TSOP (Normal Type) | |
| MX29LV160CBTI-90 | 90 | 30 | 5 | 48 Pin TSOP (Normal Type) | |
| MX29LV160CTXBC-55R | 55 | 30 | 5 | 48 Ball CSP (ball size:0.3mm) | |
| MX29LV160CBXBC-55R | 55 | 30 | 5 | 48 Ball CSP (ball size:0.3mm) | |
| MX29LV160CTXBC-70 | 70 | 30 | 5 | 48 Ball CSP (ball size:0.3mm) | |

| PART NO. | ACCESS TIME (ns) | OPERATING Current MAX. (mA) | STANDBY Current MAX. (uA) | PACKAGE | Remark |
|---|---|---|---|---|---|
| MX29LV160CBXBC-70 | 70 | 30 | 5 | 48 Ball CSP (ball size:0.3mm) | |
| MX29LV160CTXBC-90 | 90 | 30 | 5 | 48 Ball CSP (ball size:0.3mm) | |
| MX29LV160CBXBC-90 | 90 | 30 | 5 | 48 Ball CSP (ball size:0.3mm) | |
| MX29LV160CTXBI-55R | 55 | 30 | 5 | 48 Ball CSP (ball size:0.3mm) | |
| MX29LV160CBXBI-55R | 55 | 30 | 5 | 48 Ball CSP (ball size:0.3mm) | |
| MX29LV160CTXBI-70 | 70 | 30 | 5 | 48 Ball CSP (ball size:0.3mm) | |
| MX29LV160CBXBI-70 | 70 | 30 | 5 | 48 Ball CSP (ball size:0.3mm) | |
| MX29LV160CTXBI-90 | 90 | 30 | 5 | 48 Ball CSP (ball size:0.3mm) | |
| MX29LV160CBXBI-90 | 90 | 30 | 5 | 48 Ball CSP (ball size:0.3mm) | |
| MX29LV160CTXEC-55R | 55 | 30 | 5 | 48 Ball CSP (ball size:0.4mm) | |
| MX29LV160CBXEC-55R | 55 | 30 | 5 | 48 Ball CSP (ball size:0.4mm) | |
| MX29LV160CTXEC-70 | 70 | 30 | 5 | 48 Ball CSP (ball size:0.4mm) | |
| MX29LV160CBXEC-70 | 70 | 30 | 5 | 48 Ball CSP (ball size:0.4mm) | |
| MX29LV160CTXEC-90 | 90 | 30 | 5 | 48 Ball CSP (ball size:0.4mm) | |
| MX29LV160CBXEC-90 | 90 | 30 | 5 | 48 Ball CSP (ball size:0.4mm) | |
| MX29LV160CTXEI-55R | 55 | 30 | 5 | 48 Ball CSP (ball size:0.4mm) | |
| MX29LV160CBXEI-55R | 55 | 30 | 5 | 48 Ball CSP (ball size:0.4mm) | |
| MX29LV160CTXEI-70 | 70 | 30 | 5 | 48 Ball CSP (ball size:0.4mm) | |
| MX29LV160CBXEI-70 | 70 | 30 | 5 | 48 Ball CSP (ball size:0.4mm) | |
| MX29LV160CTXEI-90 | 90 | 30 | 5 | 48 Ball CSP (ball size:0.4mm) | |
| MX29LV160CBXEI-90 | 90 | 30 | 5 | 48 Ball CSP (ball size:0.4mm) | |

| PART NO. | ACCESS TIME (ns) | OPERATING Current MAX. (mA) | STANDBY Current MAX. (uA) | PACKAGE | Remark |
|---|---|---|---|---|---|
| MX29LV160CTMC-55Q | 55 | 30 | 5 | 44 Pin SOP | PB free |
| MX29LV160CBMC-55Q | 55 | 30 | 5 | 44 Pin SOP | PB free |
| MX29LV160CTMC-70G | 70 | 30 | 5 | 44 Pin SOP | PB free |
| MX29LV160CBMC-70G | 70 | 30 | 5 | 44 Pin SOP | PB free |
| MX29LV160CTMC-90G | 90 | 30 | 5 | 44 Pin SOP | PB free |
| MX29LV160CBMC-90G | 90 | 30 | 5 | 44 Pin SOP | PB free |
| MX29LV160CTMI-55Q | 55 | 30 | 5 | 44 Pin SOP | PB free |
| MX29LV160CBMI-55Q | 55 | 30 | 5 | 44 Pin SOP | PB free |
| MX29LV160CTMI-70G | 70 | 30 | 5 | 44 Pin SOP | PB free |
| MX29LV160CBMI-70G | 70 | 30 | 5 | 44 Pin SOP | PB free |
| MX29LV160CTMI-90G | 90 | 30 | 5 | 44 Pin SOP | PB free |
| MX29LV160CBMI-90G | 90 | 30 | 5 | 44 Pin SOP | PB free |
| MX29LV160CTTC-55Q | 55 | 30 | 5 | 48 Pin TSOP (Normal Type) | PB free |
| MX29LV160CBTC-55Q | 55 | 30 | 5 | 48 Pin TSOP (Normal Type) | PB free |
| MX29LV160CTTC-70G | 70 | 30 | 5 | 48 Pin TSOP (Normal Type) | PB free |
| MX29LV160CBTC-70G | 70 | 30 | 5 | 48 Pin TSOP (Normal Type) | PB free |
| MX29LV160CTTC-90G | 90 | 30 | 5 | 48 Pin TSOP (Normal Type) | PB free |
| MX29LV160CBTC-90G | 90 | 30 | 5 | 48 Pin TSOP (Normal Type) | PB free |
| MX29LV160CTTI-55Q | 55 | 30 | 5 | 48 Pin TSOP (Normal Type) | PB free |
| MX29LV160CBTI-55Q | 55 | 30 | 5 | 48 Pin TSOP (Normal Type) | PB free |
| MX29LV160CTTI-70G | 70 | 30 | 5 | 48 Pin TSOP (Normal Type) | PB free |
| MX29LV160CBTI-70G | 70 | 30 | 5 | 48 Pin TSOP (Normal Type) | PB free |
| MX29LV160CTTI-90G | 90 | 30 | 5 | 48 Pin TSOP (Normal Type) | PB free |
| MX29LV160CBTI-90G | 90 | 30 | 5 | 48 Pin TSOP (Normal Type) | PB free |
| MX29LV160CTXBC-55Q | 55 | 30 | 5 | 48 Ball CSP (ball size:0.3mm) | PB free |
| MX29LV160CBXBC-55Q | 55 | 30 | 5 | 48 Ball CSP (ball size:0.3mm) | PB free |

| PART NO. | ACCESS TIME (ns) | OPERATING Current MAX. (mA) | STANDBY Current MAX. (uA) | PACKAGE | Remark |
|---|---|---|---|---|---|
| MX29LV160CTXBC-70G | 70 | 30 | 5 | 48 Ball CSP (ball size:0.3mm) | PB free |
| MX29LV160CBXBC-70G | 70 | 30 | 5 | 48 Ball CSP (ball size:0.3mm) | PB free |
| MX29LV160CTXBC-90G | 90 | 30 | 5 | 48 Ball CSP (ball size:0.3mm) | PB free |
| MX29LV160CBXBC-90G | 90 | 30 | 5 | 48 Ball CSP (ball size:0.3mm) | PB free |
| MX29LV160CTXBI-55Q | 55 | 30 | 5 | 48 Ball CSP (ball size:0.3mm) | PB free |
| MX29LV160CBXBI-55Q | 55 | 30 | 5 | 48 Ball CSP (ball size:0.3mm) | PB free |
| MX29LV160CTXBI-70G | 70 | 30 | 5 | 48 Ball CSP (ball size:0.3mm) | PB free |
| MX29LV160CBXBI-70G | 70 | 30 | 5 | 48 Ball CSP (ball size:0.3mm) | PB free |
| MX29LV160CTXBI-90G | 90 | 30 | 5 | 48 Ball CSP (ball size:0.3mm) | PB free |
| MX29LV160CBXBI-90G | 90 | 30 | 5 | 48 Ball CSP (ball size:0.3mm) | PB free |
| MX29LV160CTXEC-55Q | 55 | 30 | 5 | 48 Ball CSP (ball size:0.4mm) | PB free |
| MX29LV160CBXEC-55Q | 55 | 30 | 5 | 48 Ball CSP (ball size:0.4mm) | PB free |
| MX29LV160CTXEC-70G | 70 | 30 | 5 | 48 Ball CSP (ball size:0.4mm) | PB free |
| MX29LV160CBXEC-70G | 70 | 30 | 5 | 48 Ball CSP (ball size:0.4mm) | PB free |
| MX29LV160CTXEC-90G | 90 | 30 | 5 | 48 Ball CSP (ball size:0.4mm) | PB free |
| MX29LV160CBXEC-90G | 90 | 30 | 5 | 48 Ball CSP (ball size:0.4mm) | PB free |
| MX29LV160CTXEI-55Q | 55 | 30 | 5 | 48 Ball CSP (ball size:0.4mm) | PB free |
| MX29LV160CBXEI-55Q | 55 | 30 | 5 | 48 Ball CSP (ball size:0.4mm) | PB free |
| MX29LV160CTXEI-70G | 70 | 30 | 5 | 48 Ball CSP (ball size:0.4mm) | PB free |
| MX29LV160CBXEI-70G | 70 | 30 | 5 | 48 Ball CSP (ball size:0.4mm) | PB free |
| MX29LV160CTXEI-90G | 90 | 30 | 5 | 48 Ball CSP (ball size:0.4mm) | PB free |
| MX29LV160CBXEI-90G | 90 | 30 | 5 | 48 Ball CSP (ball size:0.4mm) | PB free |

## PART NAME DESCRIPTION

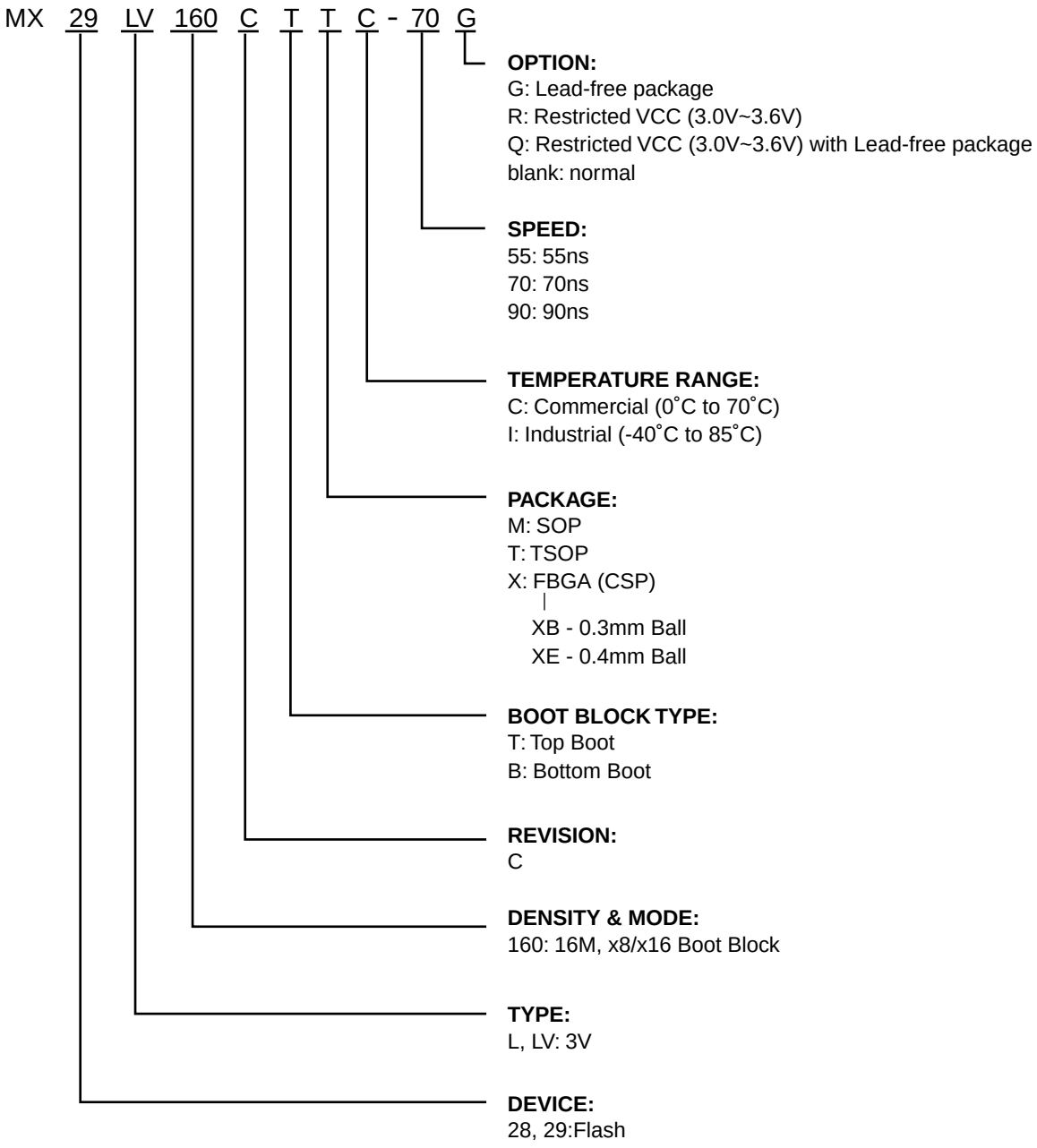

## PACKAGE INFORMATION

**Title:** Package Outline for TSOP(I) 48L (12X20mm)NORMAL FORM

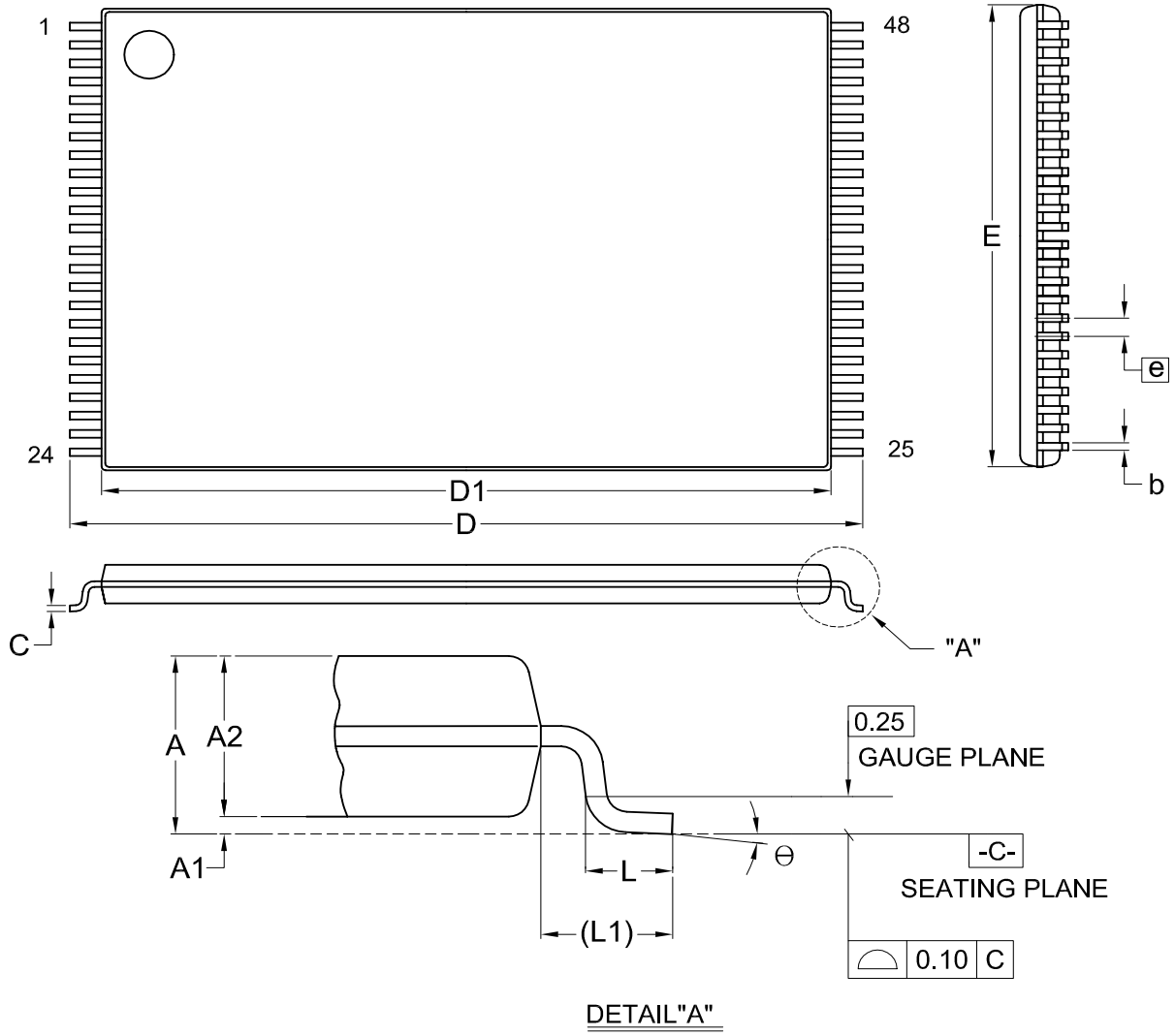


Dimensions (inch dimensions are derived from the original mm dimensions)

| SYMBOL / UNIT | | A | A1 | A2 | b | C | D | D1 | E | e | L | L1 | Θ |
|---|---|---|---|---|---|---|---|---|---|---|---|---|---|
| mm | Min. | --- | 0.05 | 0.95 | 0.17 | 0.10 | 19.80 | 18.30 | 11.90 | | 0.50 | 0.70 | 0 |
| | Nom. | --- | 0.10 | 1.00 | 0.20 | 0.13 | 20.00 | 18.40 | 12.00 | 0.50 | 0.60 | 0.80 | 5 |
| | Max. | 1.20 | 0.15 | 1.05 | 0.27 | 0.21 | 20.20 | 18.50 | 12.10 | | 0.70 | 0.90 | 8 |
| Inch | Min. | --- | 0.002 | 0.037 | 0.007 | 0.004 | 0.780 | 0.720 | 0.469 | | 0.020 | 0.028 | 0 |
| | Nom. | --- | 0.004 | 0.039 | 0.008 | 0.005 | 0.787 | 0.724 | 0.472 | 0.020 | 0.024 | 0.031 | 5 |
| | Max. | 0.047 | 0.006 | 0.041 | 0.011 | 0.008 | 0.795 | 0.728 | 0.476 | | 0.028 | 0.035 | 8 |

| DWG.NO. | REVISION | REFERENCE | | | ISSUE DATE |
|---|---|---|---|---|---|
| | | JEDEC | EIAJ | | |
| 6110-1607 | 7 | MO-142 | | | 12-01-'03 |

**Title:** **Package Outline for SOP 44L (500MIL)**

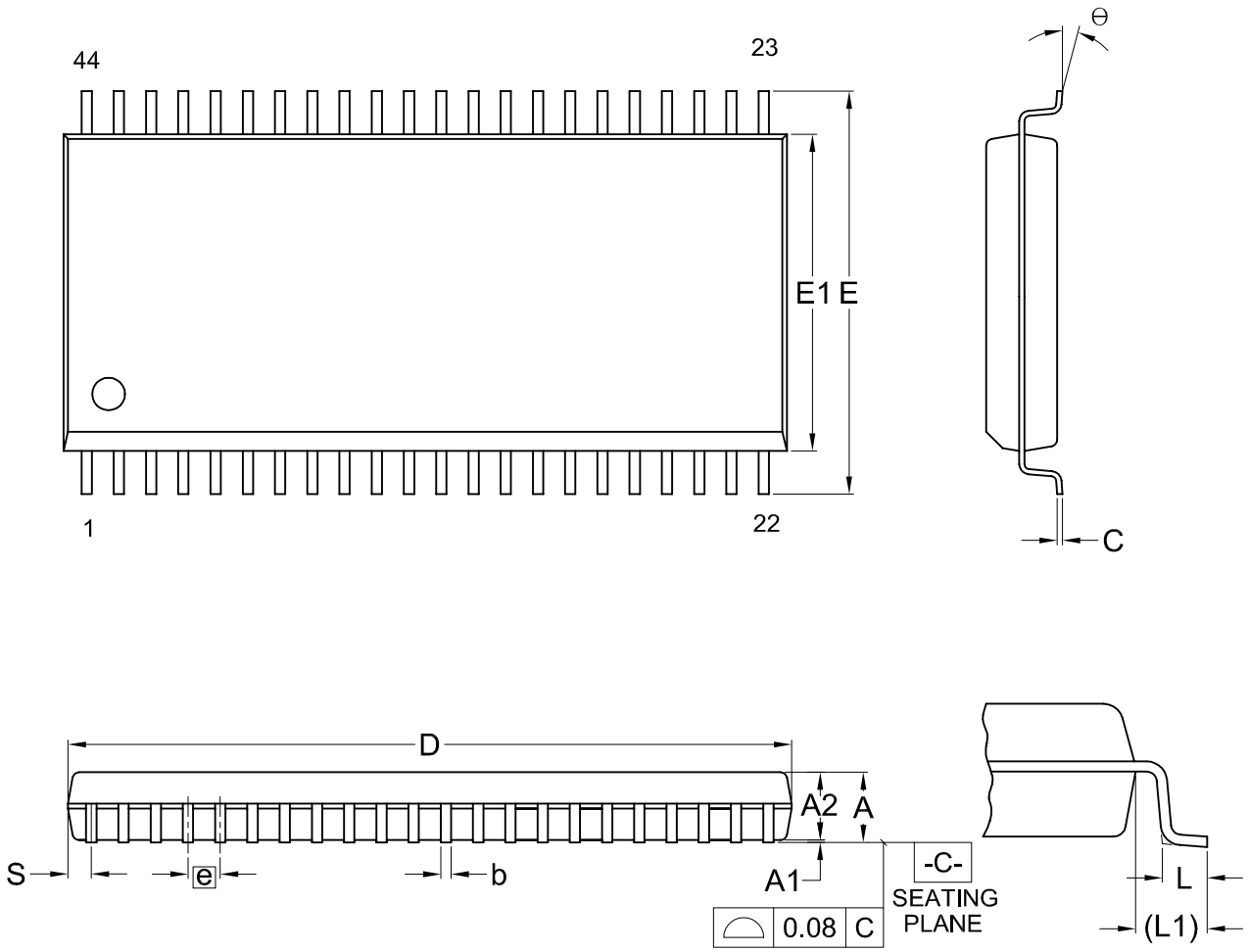


Dimensions (inch dimensions are derived from the original mm dimensions)

| SYMBOL / UNIT | | A | A1 | A2 | b | C | D | E | E1 | e | L | L1 | S | θ |
|---|---|---|---|---|---|---|---|---|---|---|---|---|---|---|
| mm | Min. | --- | 0.10 | 2.59 | 0.36 | 0.15 | 28.37 | 15.83 | 12.47 | | 0.56 | 1.51 | 0.78 | 0 |
| | Nom. | --- | 0.15 | 2.69 | 0.41 | 0.20 | 28.50 | 16.03 | 12.60 | 1.27 | 0.76 | 1.71 | 0.91 | 5 |
| | Max. | 3.00 | 0.20 | 2.80 | 0.51 | 0.25 | 28.63 | 16.23 | 12.73 | | 0.96 | 1.91 | 1.04 | 10 |
| Inch | Min. | --- | 0.004 | 0.102 | 0.014 | 0.006 | 1.117 | 0.623 | 0.491 | | 0.022 | 0.059 | 0.031 | 0 |
| | Nom. | --- | 0.006 | 0.106 | 0.016 | 0.008 | 1.122 | 0.631 | 0.496 | 0.050 | 0.030 | 0.067 | 0.036 | 5 |
| | Max. | 0.118 | 0.008 | 0.110 | 0.020 | 0.010 | 1.127 | 0.639 | 0.501 | | 0.038 | 0.075 | 0.041 | 10 |

| DWG.NO. | REVISION | REFERENCE | | | ISSUE DATE |
|---|---|---|---|---|---|
| | | JEDEC | EIAJ | | |
| 6110-1405 | 6 | MO-175 | | | 11-26-'03 |

**48-Ball CSP (for MX29LV160CTXBC/BTXBI/BBXBC/BBXBI)**

**Title: Package Outline for CSP 48BALL(6X8X1.2MM,BALL PITCH 0.8MM,BALL DIAMETER 0.3MM)**

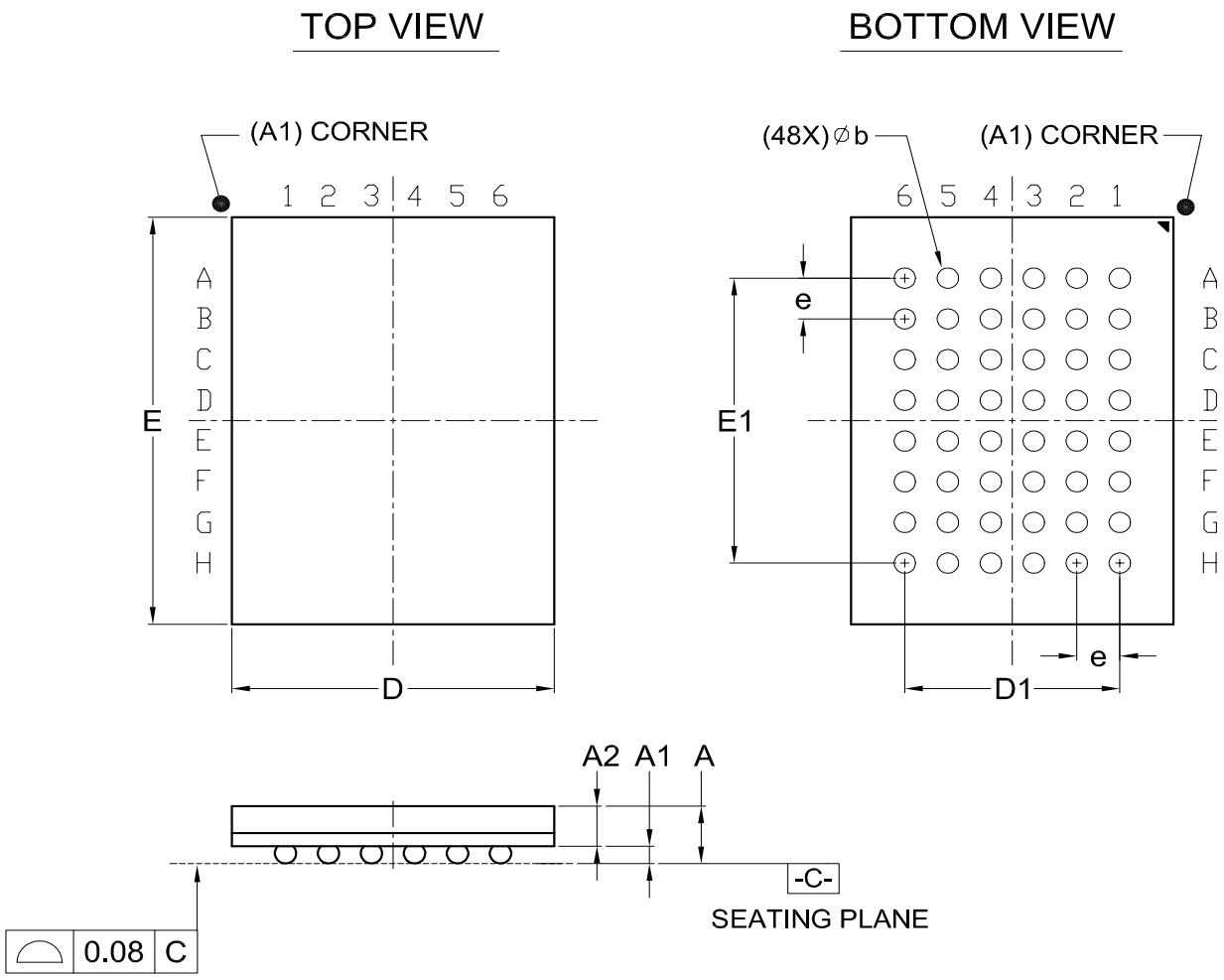


Dimensions (inch dimensions are derived from the original mm dimensions)

| SYMBOL / UNIT | | A | A1 | A2 | b | D | D1 | E | E1 | e |
|---|---|---|---|---|---|---|---|---|---|---|
| mm | Min. | --- | 0.18 | 0.65 | 0.27 | 5.90 | | 7.90 | | |
| | Nom. | --- | 0.23 | — | 0.30 | 6.00 | 4.00 | 8.00 | 5.60 | 0.80 |
| | Max. | 1.20 | 0.28 | — | 0.37 | 6.10 | | 8.10 | | |
| Inch | Mln. | — | 0.007 | 0.026 | 0.011 | 0.232 | | 0.311 | | |
| | Nom. | — | 0.009 | --- | 0.012 | 0.236 | 0.157 | 0.315 | 0.220 | 0.031 |
| | Max. | 0.047 | 0.011 | --- | 0.015 | 0.240 | | 0.319 | | |

| DWG.NO. | REVISION | REFERENCE | | | ISSUE DATE |
|---|---|---|---|---|---|
| | | JEDEC | EIAJ | | |
| 6110-4201 | 4 | MO-210 | | | 12-12-'03 |

**48-Ball CSP (for MX29LV160CTXEC/BTXEI/BBXEC/BBXEI)**

**Title: Package Outline for CSP 48BALL(6X8X1.3MM,BALL PITCH 0.8MM,BALL DIAMETER 0.4MM)**

TOP VIEW

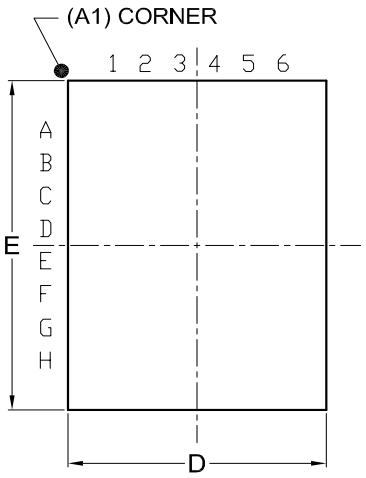


BOTTOM VIEW

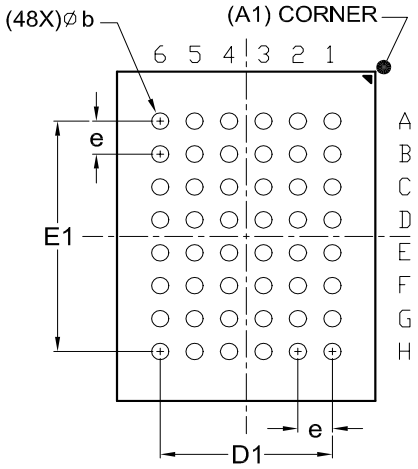


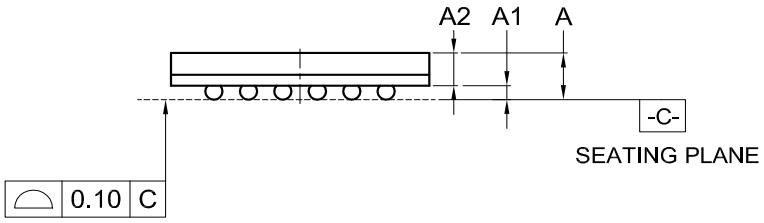


Dimensions (inch dimensions are derived from the original mm dimensions)

| SYMBOL / UNIT | | A | A1 | A2 | b | D | D1 | E | E1 | e |
|---|---|---|---|---|---|---|---|---|---|---|
| mm | Min. | --- | 0.25 | 0.65 | 0.35 | 5.90 | | 7.90 | | |
| | Nom. | --- | 0.30 | --- | 0.40 | 6.00 | 4.00 | 8.00 | 5.60 | 0.80 |
| | Max. | 1.30 | 0.35 | --- | 0.45 | 6.10 | | 8.10 | | |
| Inch | Min. | — | 0.010 | 0.026 | 0.014 | 0.232 | | 0.311 | | |
| | Nom. | — | 0.012 | — | 0.016 | 0.236 | 0.157 | 0.315 | 0.220 | 0.031 |
| | Max. | 0.051 | 0.014 | — | 0.018 | 0.240 | | 0.319 | | |

| DWG.NO. | REVISION | REFERENCE | | | ISSUE DATE |
|---|---|---|---|---|---|
| | | JEDEC | EIAJ | | |
| 6110-4202 | 4 | MO-219 | | | 12-12-'03 |

## REVISION HISTORY

| Revision No. | Description | Page | Date |
|---|---|---|---|
| 1.0 | 1. Removed "Preliminary" | P1 | MAY/12/2005 |
| 1.1 | 1. Added PB-free package information for 44-SOP | P57 | JUL/22/2005 |
| | 2. Added "Recommended Operating Conditions" | P54 | |
| 1.2 | 1. Modified Erase Resume from delay 10ms to delay 400us | P15,36 | JAN/19/2006 |

## MACRONIX INTERNATIONAL CO., LTD.

**Headquarters:**
TEL:+886-3-578-6688
FAX:+886-3-563-2888

**Europe Office :**
TEL:+32-2-456-8020
FAX:+32-2-456-8021

**Hong Kong Office :**
TEL:+86-755-834-335-79
FAX:+86-755-834-380-78

**Japan Office :**
**Kawasaki Office :**
TEL:+81-44-246-9100
FAX:+81-44-246-9105
**Osaka Office :**
TEL:+81-6-4807-5460
FAX:+81-6-4807-5461

**Singapore Office :**
TEL:+65-6346-5505
FAX:+65-6348-8096

**Taipei Office :**
TEL:+886-2-2509-3300
FAX:+886-2-2509-2200

**MACRONIX AMERICA, INC.**
TEL:+1-408-262-8887
FAX:+1-408-262-8810

***http : //www.macronix.com***


*MACRONIX INTERNATIONAL CO., LTD. reserves the right to change product and specifications without notice.*