128M-BIT [16M x 8/8M x 16] SINGLE VOLTAGE 3V ONLY FLASH MEMORY

FEATURES

GENERAL FEATURES

- 16,777,216 x 8 / 8,388,608 x 16 switchable
- Sector Structure
  - 8KB(4KW) x 8 and 64KB(32KW) x 255
- Extra 128-word sector for security
  - Features factory locked and identifiable, and customer lockable
- Sector Groups Protection / Chip Unprotect
  - Provides sector group protect function to prevent program or erase operation in the protected sector group
  - Provides chip unprotect function to allow code changing
  - Provides temporary sector group unprotect function for code changing in previously protected sector groups
- Single Power Supply Operation
  - 3.0 to 3.6 volt for read, erase, and program operations
- Latch-up protected to 100mA from -1V to 1.5xVcc
- Low Vcc write inhibit : Vcc <= VLKO
- Compatible with JEDEC standard
  - Pinout and software compatible to single power supply Flash

PERFORMANCE

- High Performance
  - Fast access time: 90ns
  - Fast program time: 11us/word (typical)
  - Fast erase time: 1s/sector (typical)
- Low Power Consumption
  - Low active read current: 20mA (typical) at 5MHz
  - Low standby current: 8uA (typical)
- Typical 100,000 erase/program cycle
- 10 years data retention

SOFTWARE FEATURES

- Erase Suspend/ Erase Resume
  - Suspends sector erase operation to read data from or program data to another sector which is not being erased
- Status Reply
  - Data# Polling & Toggle bits provide detection of program and erase operation completion
- Support Common Flash Interface (CFI)

HARDWARE FEATURES

- Ready/Busy# (RY/BY#) Output
  - Provides a hardware method of detecting program and erase operation completion
- Hardware Reset (RESET#) Input
  - Provides a hardware method to reset the internal state machine to read mode
- WP#/ACC input pin
  - Hardware write protect pin/Provides accelerated program capability

PACKAGE

- 48-Pin TSOP
- 56-Pin TSOP
- 70-Pin SSOP
- **All Pb-free devices are RoHS Compliant**

PIN CONFIGURATION

48 TSOP

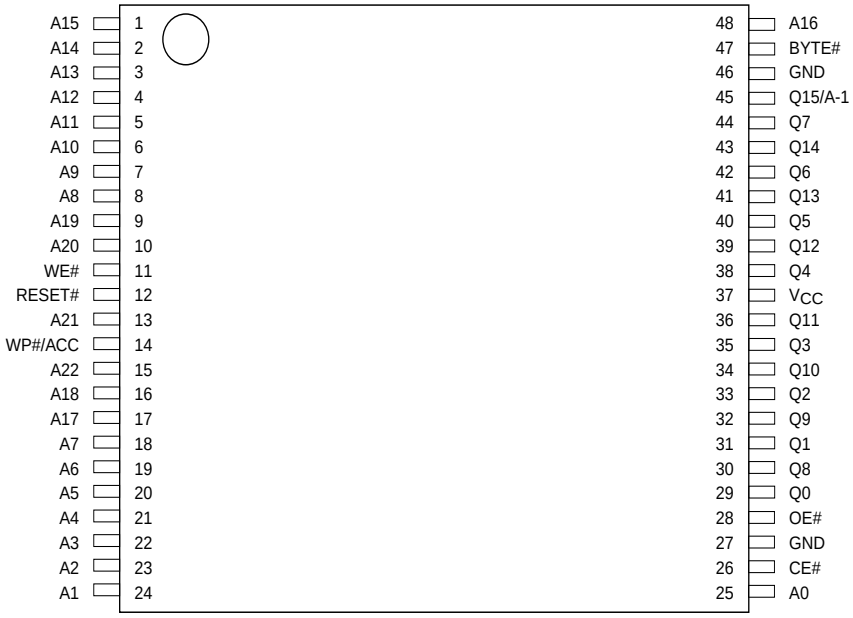

56 TSOP

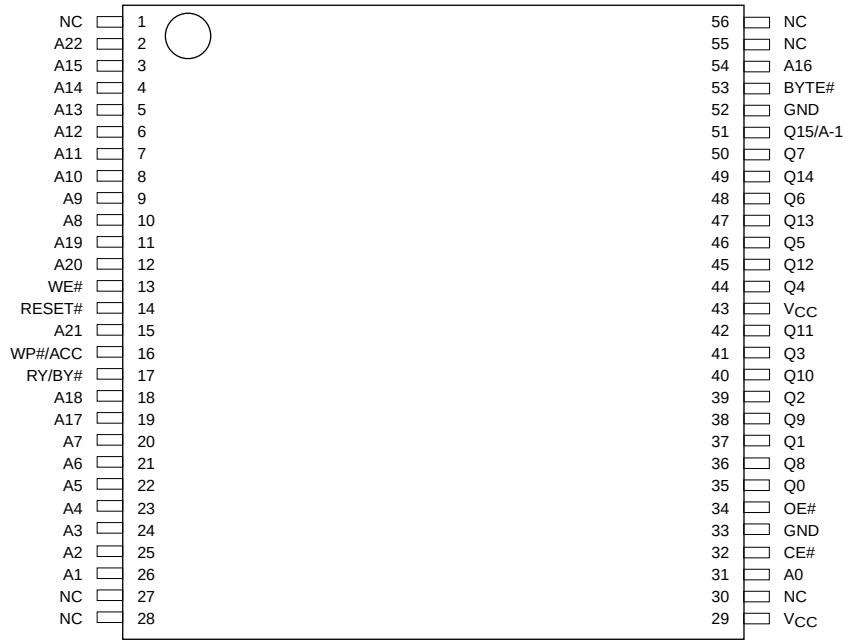

70 SSOP

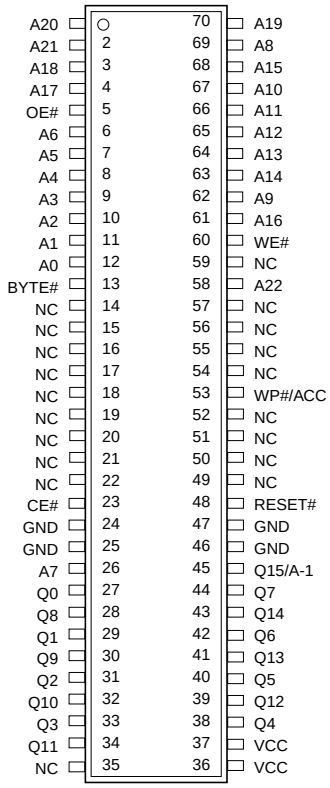

PIN DESCRIPTION

SYMBOL	PIN NAME
A0~A22	Address Input
Q0~Q14	Data Inputs/Outputs
Q15/A-1	Q15(Word Mode)/LSB addr(Byte Mode)
CE#	Chip Enable Input
WE#	Write Enable Input
OE#	Output Enable Input
RESET#	Hardware Reset Pin, Active Low
WP#/ACC	Hardware Write Protect/Programming Acceleration input
RY/BY#	Read/Busy Output
BYTE#	Selects 8 bits or 16 bits mode
VCC	+3.0V single power supply
GND	Device Ground
NC	Pin Not Connected Internally

LOGIC SYMBOL

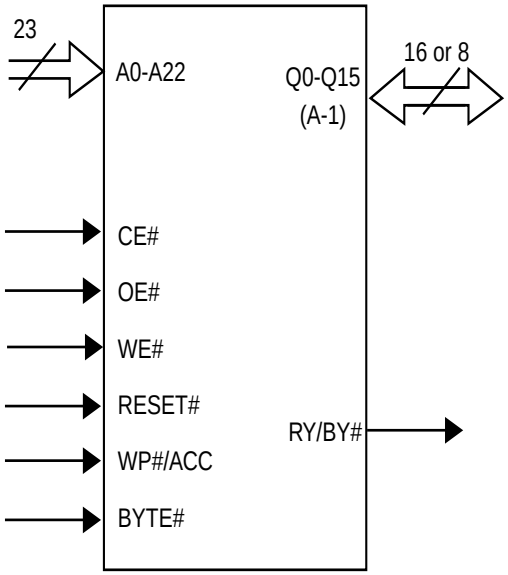

BLOCK DIAGRAM

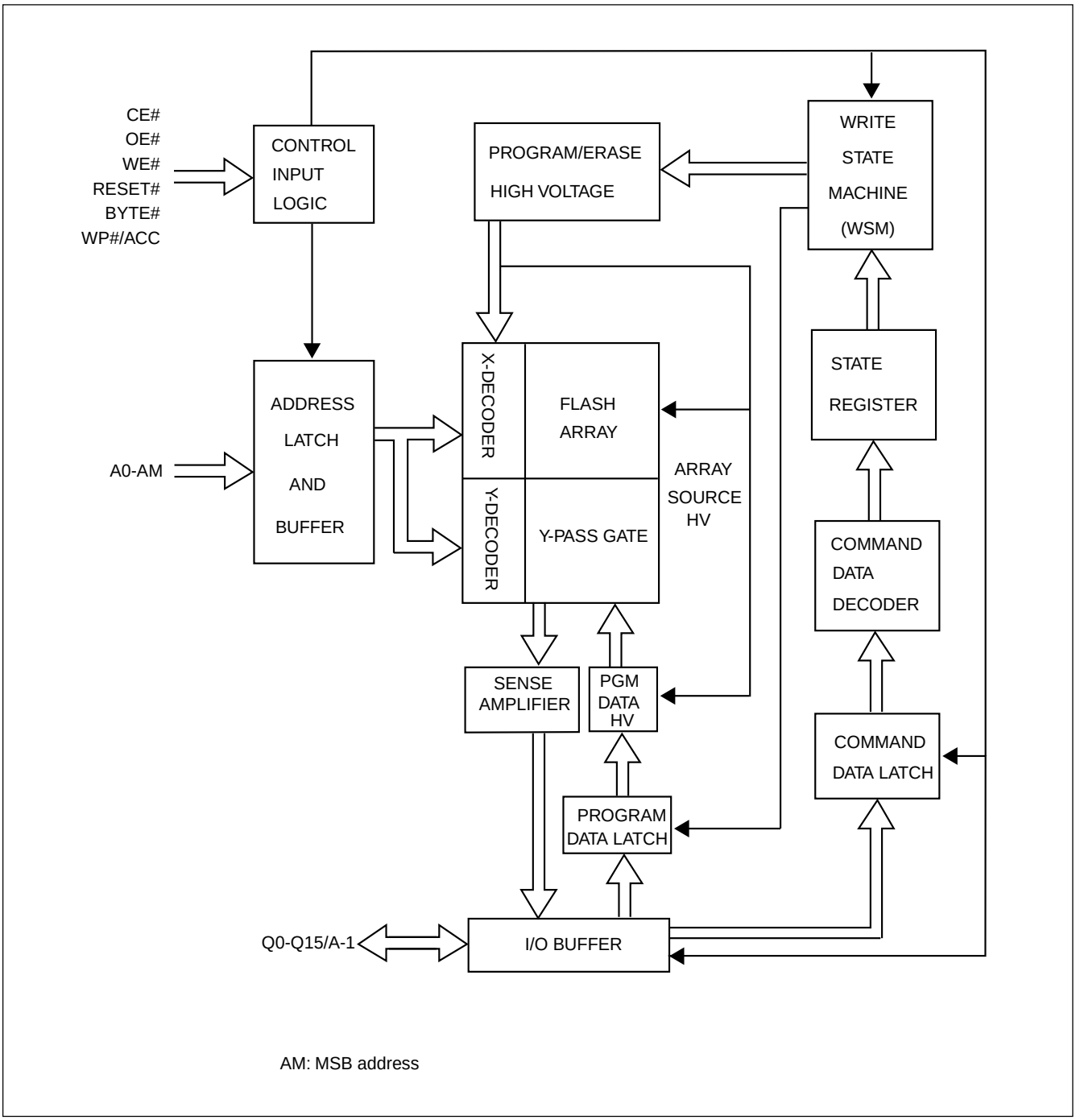

BLOCK DIAGRAM DESCRIPTION

The block diagram on Page 4 illustrates a simplified architecture of MX29LV128D T/B. Each block in the block diagram represents one or more circuit modules in the real chip used to access, erase, program, and read the memory array.

The "CONTROL INPUT LOGIC" block receives input pins CE#, OE#, WE#, RESET#, BYTE#, and WP#/ACC. It creates internal timing control signals according to the input pins and outputs to the "ADDRESS LATCH AND BUFFER" to latch the external address pins A0-AM(A22). The internal addresses are output from this block to the main array and decoders composed of "X-DECODER", "Y-DECODER", "Y-PASS GATE", AND "FLASH ARRAY". The X-DECODER decodes the word-lines of the flash array, while the Y-DECODER decodes the bit-lines of the flash array. The bit lines are electrically connected to the "SENSE AMPLIFIER" and "PGM DATA HV" selectively through the Y-PASS GATES. SENSE AMPLIFIERS are used to read out the contents of the flash memory, while the "PGM DATA HV" block is used to selectively deliver high power to bit-lines during programming. The "I/O BUFFER" controls the input and output on the Q0-Q15/A-1 pads. During read operation, the I/O BUFFER receives data from SENSE AMPLIFIERS and drives the output pads accordingly. In the last cycle of program command, the I/O BUFFER transmits the data on Q0-Q15/A-1 to "PROGRAM DATA LATCH", which controls the high power drivers in "PGM DATA HV" to selectively program the bits in a word or byte according to the user input pattern.

The "PROGRAM/ERASE HIGH VOLTAGE" block comprises the circuits to generate and deliver the necessary high voltage to the X-DECODER, FLASH ARRAY, and "PGM DATA HV" blocks. The logic control module comprises of the "WRITE STATE MACHINE, WSM", "STATE REGISTER", "COMMAND DATA DECODER", and "COMMAND DATA LATCH". When the user issues a command by toggling WE#, the command on Q0-A15/A-1 is latched in the COMMAND DATA LATCH and is decoded by the COMMAND DATA DECODER. The STATE REGISTER receives the command and records the current state of the device. The WSM implements the internal algorithms for program or erase according to the current command state by controlling each block in the block diagram.

ARRAY ARCHITECTURE

The main flash memory array can be organized as 16M Bytes x 8 or as 8M Words x 16. The details of the address ranges and the corresponding sector addresses are shown in Table 1. Table 1.a shows the sector group architecture for the Top Boot part, whereas Table 1.b shows the sector group architecture for the Bottom Boot part. The specific security sector addresses are shown at the bottom off each of these tables.

BLOCK STRUCTURE

Table 1. a: MX29LV128DT SECTOR GROUP ARCHITECTURE

Sector Group	Sector Size		Sector	Sector Address A22-A12	Address Range	
	Byte Mode (Kbytes)	Word Mode (Kwords)			Byte Mode (x8)	Word Mode (x16)
1	64	32	SA0	00000000xxx	000000-0FFFF	000000-007FFF
1	64	32	SA1	00000001xxx	010000-1FFFF	008000-00FFFF
1	64	32	SA2	00000010xxx	020000-2FFFF	010000-017FFF
1	64	32	SA3	00000011xxx	030000-3FFFF	018000-01FFFF
2	64	32	SA4	00000100xxx	040000-4FFFF	020000-027FFF
2	64	32	SA5	00000101xxx	050000-5FFFF	028000-02FFFF
2	64	32	SA6	00000110xxx	060000-6FFFF	030000-037FFF
2	64	32	SA7	00000111xxx	070000-7FFFF	038000-03FFFF
3	64	32	SA8	00001000xxx	080000-8FFFF	040000-047FFF
3	64	32	SA9	00001001xxx	090000-9FFFF	048000-04FFFF
3	64	32	SA10	00001010xxx	0A0000-AFFFF	050000-057FFF
3	64	32	SA11	00001011xxx	0B0000-BFFFF	058000-05FFFF
4	64	32	SA12	00001100xxx	0C0000-CFFFF	060000-067FFF
4	64	32	SA13	00001101xxx	0D0000-DFFFF	068000-06FFFF
4	64	32	SA14	00001110xxx	0E0000-EFFFF	070000-077FFF
4	64	32	SA15	00001111xxx	0F0000-FFFFF	078000-07FFFF
5	64	32	SA16	00010000xxx	100000-10FFFF	080000-087FFF
5	64	32	SA17	00010001xxx	110000-11FFFF	088000-08FFFF
5	64	32	SA18	00010010xxx	120000-12FFFF	090000-097FFF
5	64	32	SA19	00010011xxx	130000-13FFFF	098000-09FFFF
6	64	32	SA20	00010100xxx	140000-14FFFF	0A0000-0A7FFF
6	64	32	SA21	00010101xxx	150000-15FFFF	0A8000-0AFFFF
6	64	32	SA22	00010110xxx	160000-16FFFF	0B0000-0B7FFF
6	64	32	SA23	00010111xxx	170000-17FFFF	0B8000-0BFFFF
7	64	32	SA24	00011000xxx	180000-18FFFF	0C0000-0C7FFF
7	64	32	SA25	00011001xxx	190000-19FFFF	0C8000-0CFFFF
7	64	32	SA26	00011010xxx	1A0000-1AFFFF	0D0000-0D7FFF
7	64	32	SA27	00011011xxx	1B0000-1BFFFF	0D8000-0DFFFF
8	64	32	SA28	00011100xxx	1C0000-1CFFFF	0E0000-0E7FFF
8	64	32	SA29	00011101xxx	1D0000-1DFFFF	0E8000-0EFFFF
8	64	32	SA30	00011110xxx	1E0000-1EFFFF	0F0000-0F7FFF
8	64	32	SA31	00011111xxx	1F0000-1FFFFF	0F8000-0FFFFF
9	64	32	SA32	00100000xxx	200000-20FFFF	100000-107FFF
9	64	32	SA33	00100001xxx	210000-21FFFF	108000-10FFFF
9	64	32	SA34	00100010xxx	220000-22FFFF	110000-117FFF
9	64	32	SA35	00100011xxx	230000-23FFFF	118000-11FFFF
10	64	32	SA36	00100100xxx	240000-24FFFF	120000-127FFF
10	64	32	SA37	00100101xxx	250000-25FFFF	128000-12FFFF
10	64	32	SA38	00100110xxx	260000-26FFFF	130000-137FFF

Sector Group	Sector Size		Sector	Sector Address A22-A12	Address Range	
	Byte Mode (Kbytes)	Word Mode (Kwords)			Byte Mode (x8)	Word Mode (x16)
10	64	32	SA39	00100111xxx	270000-27FFFF	138000-13FFFF
11	64	32	SA40	00101000xxx	280000-28FFFF	140000-147FFF
11	64	32	SA41	00101001xxx	290000-29FFFF	148000-14FFFF
11	64	32	SA42	00101010xxx	2A0000-2AFFFF	150000-157FFF
11	64	32	SA43	00101011xxx	2B0000-2BFFFF	158000-15FFFF
12	64	32	SA44	00101100xxx	2C0000-2CFFFF	160000-167FFF
12	64	32	SA45	00101101xxx	2D0000-2DFFFF	168000-16FFFF
12	64	32	SA46	00101110xxx	2E0000-2EFFFF	170000-177FFF
12	64	32	SA47	00101111xxx	2F0000-2FFFFF	178000-17FFFF
13	64	32	SA48	00110000xxx	300000-30FFFF	180000-187FFF
13	64	32	SA49	00110001xxx	310000-31FFFF	188000-18FFFF
13	64	32	SA50	00110010xxx	320000-32FFFF	190000-197FFF
13	64	32	SA51	00110011xxx	330000-33FFFF	198000-19FFFF
14	64	32	SA52	00110100xxx	340000-34FFFF	1A0000-1A7FFF
14	64	32	SA53	00110101xxx	350000-35FFFF	1A8000-1AFFFF
14	64	32	SA54	00110110xxx	360000-36FFFF	1B0000-1B7FFF
14	64	32	SA55	00110111xxx	370000-37FFFF	1B8000-1BFFFF
15	64	32	SA56	00111000xxx	380000-38FFFF	1C0000-1C7FFF
15	64	32	SA57	00111001xxx	390000-39FFFF	1C8000-1CFFFF
15	64	32	SA58	00111010xxx	3A0000-3AFFFF	1D0000-1D7FFF
15	64	32	SA59	00111011xxx	3B0000-3BFFFF	1D8000-1DFFFF
16	64	32	SA60	00111100xxx	3C0000-3CFFFF	1E0000-1E7FFF
16	64	32	SA61	00111101xxx	3D0000-3DFFFF	1E8000-1EFFFF
16	64	32	SA62	00111110xxx	3E0000-3EFFFF	1F0000-1F7FFF
16	64	32	SA63	00111111xxx	3F0000-3FFFFF	1F8000-1FFFFF
17	64	32	SA64	01000000xxx	400000-40FFFF	200000-207FFF
17	64	32	SA65	01000001xxx	410000-41FFFF	208000-20FFFF
17	64	32	SA66	01000010xxx	420000-42FFFF	210000-217FFF
17	64	32	SA67	01000011xxx	430000-43FFFF	218000-21FFFF
18	64	32	SA68	01000100xxx	440000-44FFFF	220000-227FFF
18	64	32	SA69	01000101xxx	450000-45FFFF	228000-22FFFF
18	64	32	SA70	01000110xxx	460000-46FFFF	230000-237FFF
18	64	32	SA71	01000111xxx	470000-47FFFF	238000-23FFFF
19	64	32	SA72	01001000xxx	480000-48FFFF	240000-247FFF
19	64	32	SA73	01001001xxx	490000-49FFFF	248000-24FFFF
19	64	32	SA74	01001010xxx	4A0000-4AFFFF	250000-257FFF
19	64	32	SA75	01001011xxx	4B0000-4BFFFF	258000-25FFFF
20	64	32	SA76	01001100xxx	4C0000-4CFFFF	260000-267FFF
20	64	32	SA77	01001101xxx	4D0000-4DFFFF	268000-26FFFF
20	64	32	SA78	01001110xxx	4E0000-4EFFFF	270000-277FFF
20	64	32	SA79	01001111xxx	4F0000-4FFFFF	278000-27FFFF

Sector Group	Sector Size		Sector	Sector Address A22-A12	Address Range	
	Byte Mode (Kbytes)	Word Mode (Kwords)			Byte Mode (x8)	Word Mode (x16)
21	64	32	SA80	01010000xxx	500000-50FFFF	280000-287FFF
21	64	32	SA81	01010001xxx	510000-51FFFF	288000-28FFFF
21	64	32	SA82	01010010xxx	520000-52FFFF	290000-297FFF
21	64	32	SA83	01010011xxx	530000-53FFFF	298000-29FFFF
22	64	32	SA84	01010100xxx	540000-54FFFF	2A0000-2A7FFF
22	64	32	SA85	01010101xxx	550000-55FFFF	2A8000-2AFFFF
22	64	32	SA86	01010110xxx	560000-56FFFF	2B0000-2B7FFF
22	64	32	SA87	01010111xxx	570000-57FFFF	2B8000-2BFFFF
23	64	32	SA88	01011000xxx	580000-58FFFF	2C0000-2C7FFF
23	64	32	SA89	01011001xxx	590000-59FFFF	2C8000-2CFFFF
23	64	32	SA90	01011010xxx	5A0000-5AFFFF	2D0000-2D7FFF
23	64	32	SA91	01011011xxx	5B0000-5BFFFF	2D8000-2DFFFF
24	64	32	SA92	01011100xxx	5C0000-5CFFFF	2E0000-2E7FFF
24	64	32	SA93	01011101xxx	5D0000-5DFFFF	2E8000-2EFFFF
24	64	32	SA94	01011110xxx	5E0000-5EFFFF	2F0000-2F7FFF
24	64	32	SA95	01011111xxx	5F0000-5FFFFF	2F8000-2FFFFF
25	64	32	SA96	01100000xxx	600000-60FFFF	300000-307FFF
25	64	32	SA97	01100001xxx	610000-61FFFF	308000-30FFFF
25	64	32	SA98	01100010xxx	620000-62FFFF	310000-317FFF
25	64	32	SA99	01100011xxx	630000-63FFFF	318000-31FFFF
26	64	32	SA100	01100100xxx	640000-64FFFF	320000-327FFF
26	64	32	SA101	01100101xxx	650000-65FFFF	328000-32FFFF
26	64	32	SA102	01100110xxx	660000-66FFFF	330000-337FFF
26	64	32	SA103	01100111xxx	670000-67FFFF	338000-33FFFF
27	64	32	SA104	01101000xxx	680000-68FFFF	340000-347FFF
27	64	32	SA105	01101001xxx	690000-69FFFF	348000-34FFFF
27	64	32	SA106	01101010xxx	6A0000-6AFFFF	350000-357FFF
27	64	32	SA107	01101011xxx	6B0000-6BFFFF	358000-35FFFF
28	64	32	SA108	01101100xxx	6C0000-6CFFFF	360000-367FFF
28	64	32	SA109	01101101xxx	6D0000-6DFFFF	368000-36FFFF
28	64	32	SA110	01101110xxx	6E0000-6EFFFF	370000-377FFF
28	64	32	SA111	01101111xxx	6F0000-6FFFFF	378000-37FFFF
29	64	32	SA112	01110000xxx	700000-70FFFF	380000-387FFF
29	64	32	SA113	01110001xxx	710000-71FFFF	388000-38FFFF
29	64	32	SA114	01110010xxx	720000-72FFFF	390000-397FFF
29	64	32	SA115	01110011xxx	730000-73FFFF	398000-39FFFF
30	64	32	SA116	01110100xxx	740000-74FFFF	3A0000-3A7FFF
30	64	32	SA117	01110101xxx	750000-75FFFF	3A8000-3AFFFF
30	64	32	SA118	01110110xxx	760000-76FFFF	3B0000-3B7FFF
30	64	32	SA119	01110111xxx	770000-77FFFF	3B8000-3BFFFF
31	64	32	SA120	01111000xxx	780000-78FFFF	3C0000-3C7FFF

Sector Group	Sector Size		Sector	Sector Address A22-A12	Address Range	
	Byte Mode (Kbytes)	Word Mode (Kwords)			Byte Mode (x8)	Word Mode (x16)
31	64	32	SA121	01111001xxx	790000-79FFFF	3C8000-3CFFFF
31	64	32	SA122	01111010xxx	7A0000-7AFFFF	3D0000-3D7FFF
31	64	32	SA123	01111011xxx	7B0000-7BFFFF	3D8000-3DFFFF
32	64	32	SA124	01111100xxx	7C0000-7CFFFF	3E0000-3E7FFF
32	64	32	SA125	01111101xxx	7D0000-7DFFFF	3E8000-3EFFFF
32	64	32	SA126	01111110xxx	7E0000-7EFFFF	3F0000-3F7FFF
32	64	32	SA127	01111111xxx	7F0000-7FFFFF	3F8000-3FFFFF
33	64	32	SA128	10000000xxx	800000-80FFFF	400000-407FFF
33	64	32	SA129	10000001xxx	810000-81FFFF	408000-40FFFF
33	64	32	SA130	10000010xxx	820000-82FFFF	410000-417FFF
33	64	32	SA131	10000011xxx	830000-83FFFF	418000-41FFFF
34	64	32	SA132	10000100xxx	840000-84FFFF	420000-427FFF
34	64	32	SA133	10000101xxx	850000-85FFFF	428000-42FFFF
34	64	32	SA134	10000110xxx	860000-86FFFF	430000-437FFF
34	64	32	SA135	10000111xxx	870000-87FFFF	438000-43FFFF
35	64	32	SA136	10001000xxx	880000-88FFFF	440000-447FFF
35	64	32	SA137	10001001xxx	890000-89FFFF	448000-44FFFF
35	64	32	SA138	10001010xxx	8A0000-8AFFFF	450000-457FFF
35	64	32	SA139	10001011xxx	8B0000-8BFFFF	458000-45FFFF
36	64	32	SA140	10001100xxx	8C0000-8CFFFF	460000-467FFF
36	64	32	SA141	10001101xxx	8D0000-8DFFFF	468000-46FFFF
36	64	32	SA142	10001110xxx	8E0000-8EFFFF	470000-477FFF
36	64	32	SA143	10001111xxx	8F0000-8FFFFF	478000-47FFFF
37	64	32	SA144	10010000xxx	900000-90FFFF	480000-487FFF
37	64	32	SA145	10010001xxx	910000-91FFFF	488000-48FFFF
37	64	32	SA146	10010010xxx	920000-92FFFF	490000-497FFF
37	64	32	SA147	10010011xxx	930000-93FFFF	498000-49FFFF
38	64	32	SA148	10010100xxx	940000-94FFFF	4A0000-4A7FFF
38	64	32	SA149	10010101xxx	950000-95FFFF	4A8000-4AFFFF
38	64	32	SA150	10010110xxx	960000-96FFFF	4B0000-4B7FFF
38	64	32	SA151	10010111xxx	970000-97FFFF	4B8000-4BFFFF
39	64	32	SA152	10011000xxx	980000-98FFFF	4C0000-4C7FFF
39	64	32	SA153	10011001xxx	990000-99FFFF	4C8000-4CFFFF
39	64	32	SA154	10011010xxx	9A0000-9AFFFF	4D0000-4D7FFF
39	64	32	SA155	10011011xxx	9B0000-9BFFFF	4D8000-4DFFFF
40	64	32	SA156	10011100xxx	9C0000-9CFFFF	4E0000-4E7FFF
40	64	32	SA157	10011101xxx	9D0000-9DFFFF	4E8000-4EFFFF
40	64	32	SA158	10011110xxx	9E0000-9EFFFF	4F0000-4F7FFF
40	64	32	SA159	10011111xxx	9F0000-9FFFFF	4F8000-4FFFFF
41	64	32	SA160	10100000xxx	A00000-A0FFFF	500000-507FFF
41	64	32	SA161	10100001xxx	A10000-A1FFFF	508000-50FFFF

Sector Group	Sector Size		Sector	Sector Address A22-A12	Address Range	
	Byte Mode (Kbytes)	Word Mode (Kwords)			Byte Mode (x8)	Word Mode (x16)
41	64	32	SA162	10100010xxx	A20000-A2FFFF	510000-517FFF
41	64	32	SA163	10100011xxx	A30000-A3FFFF	518000-51FFFF
42	64	32	SA164	10100100xxx	A40000-A4FFFF	520000-527FFF
42	64	32	SA165	10100101xxx	A50000-A5FFFF	528000-52FFFF
42	64	32	SA166	10100110xxx	A60000-A6FFFF	530000-537FFF
42	64	32	SA167	10100111xxx	A70000-A7FFFF	538000-53FFFF
43	64	32	SA168	10101000xxx	A80000-A8FFFF	540000-547FFF
43	64	32	SA169	10101001xxx	A90000-A9FFFF	548000-54FFFF
43	64	32	SA170	10101010xxx	AA0000-AAFFFF	550000-557FFF
43	64	32	SA171	10101011xxx	AB0000-ABFFFF	558000-55FFFF
44	64	32	SA172	10101100xxx	AC0000-ACFFFF	560000-567FFF
44	64	32	SA173	10101101xxx	AD0000-ADFFFF	568000-56FFFF
44	64	32	SA174	10101110xxx	AE0000-AEFFFF	570000-577FFF
44	64	32	SA175	10101111xxx	AF0000-AFFFFF	578000-57FFFF
45	64	32	SA176	10110000xxx	B00000-B0FFFF	580000-587FFF
45	64	32	SA177	10110001xxx	B10000-B1FFFF	588000-58FFFF
45	64	32	SA178	10110010xxx	B20000-B2FFFF	590000-597FFF
45	64	32	SA179	10110011xxx	B30000-B3FFFF	598000-59FFFF
46	64	32	SA180	10110100xxx	B40000-B4FFFF	5A0000-5A7FFF
46	64	32	SA181	10110101xxx	B50000-B5FFFF	5A8000-5AFFFF
46	64	32	SA182	10110110xxx	B60000-B6FFFF	5B0000-5B7FFF
46	64	32	SA183	10110111xxx	B70000-B7FFFF	5B8000-5BFFFF
47	64	32	SA184	10111000xxx	B80000-B8FFFF	5C0000-5C7FFF
47	64	32	SA185	10111001xxx	B90000-B9FFFF	5C8000-5CFFFF
47	64	32	SA186	10111010xxx	BA0000-BAFFFF	5D0000-5D7FFF
47	64	32	SA187	10111011xxx	BB0000-BBFFFF	5D8000-5DFFFF
48	64	32	SA188	10111100xxx	BC0000-BCFFFF	5E0000-5E7FFF
48	64	32	SA189	10111101xxx	BD0000-BDFFFF	5E8000-5EFFFF
48	64	32	SA190	10111110xxx	BE0000-BEFFFF	5F0000-5F7FFF
48	64	32	SA191	10111111xxx	BF0000-BFFFFF	5F8000-5FFFFF
49	64	32	SA192	11000000xxx	C00000-C0FFFF	600000-607FFF
49	64	32	SA193	11000001xxx	C10000-C1FFFF	608000-60FFFF
49	64	32	SA194	11000010xxx	C20000-C2FFFF	610000-617FFF
49	64	32	SA195	11000011xxx	C30000-C3FFFF	618000-61FFFF
50	64	32	SA196	11000100xxx	C40000-C4FFFF	620000-627FFF
50	64	32	SA197	11000101xxx	C50000-C5FFFF	628000-62FFFF
50	64	32	SA198	11000110xxx	C60000-C6FFFF	630000-637FFF
50	64	32	SA199	11000111xxx	C70000-C7FFFF	638000-63FFFF
51	64	32	SA200	11001000xxx	C80000-C8FFFF	640000-647FFF
51	64	32	SA201	11001001xxx	C90000-C9FFFF	648000-64FFFF
51	64	32	SA202	11001010xxx	CA0000-CAFFFF	650000-657FFF

Sector Group	Sector Size		Sector	Sector Address A22-A12	Address Range	
	Byte Mode (Kbytes)	Word Mode (Kwords)			Byte Mode (x8)	Word Mode (x16)
51	64	32	SA203	11001011xxx	CB0000-CBFFFF	658000-65FFFF
52	64	32	SA204	11001100xxx	CC0000-CCFFFF	660000-667FFF
52	64	32	SA205	11001101xxx	CD0000-CDFFFF	668000-66FFFF
52	64	32	SA206	11001110xxx	CE0000-CEFFFF	670000-677FFF
52	64	32	SA207	11001111xxx	CF0000-CFFFFF	678000-67FFFF
53	64	32	SA208	11010000xxx	D00000-D0FFFF	680000-687FFF
53	64	32	SA209	11010001xxx	D10000-D1FFFF	688000-68FFFF
53	64	32	SA210	11010010xxx	D20000-D2FFFF	690000-697FFF
53	64	32	SA211	11010011xxx	D30000-D3FFFF	698000-69FFFF
54	64	32	SA212	11010100xxx	D40000-D4FFFF	6A0000-6A7FFF
54	64	32	SA213	11010101xxx	D50000-D5FFFF	6A8000-6AFFFF
54	64	32	SA214	11010110xxx	D60000-D6FFFF	6B0000-6B7FFF
54	64	32	SA215	11010111xxx	D70000-D7FFFF	6B8000-6BFFFF
55	64	32	SA216	11011000xxx	D80000-D8FFFF	6C0000-6C7FFF
55	64	32	SA217	11011001xxx	D90000-D9FFFF	6C8000-6CFFFF
55	64	32	SA218	11011010xxx	DA0000-DAFFFF	6D0000-6D7FFF
55	64	32	SA219	11011011xxx	DB0000-DBFFFF	6D8000-6DFFFF
56	64	32	SA220	11011100xxx	DC0000-DCFFFF	6E0000-6E7FFF
56	64	32	SA221	11011101xxx	DD0000-DDFFFF	6E8000-6EFFFF
56	64	32	SA222	11011110xxx	DE0000-DEFFFF	6F0000-6F7FFF
56	64	32	SA223	11011111xxx	DF0000-DFFFFF	6F8000-6FFFFF
57	64	32	SA224	11100000xxx	E00000-E0FFFF	700000-707FFF
57	64	32	SA225	11100001xxx	E10000-E1FFFF	708000-70FFFF
57	64	32	SA226	11100010xxx	E20000-E2FFFF	710000-717FFF
57	64	32	SA227	11100011xxx	E30000-E3FFFF	718000-71FFFF
58	64	32	SA228	11100100xxx	E40000-E4FFFF	720000-727FFF
58	64	32	SA229	11100101xxx	E50000-E5FFFF	728000-72FFFF
58	64	32	SA230	11100110xxx	E60000-E6FFFF	730000-737FFF
58	64	32	SA231	11100111xxx	E70000-E7FFFF	738000-73FFFF
59	64	32	SA232	11101000xxx	E80000-E8FFFF	740000-747FFF
59	64	32	SA233	11101001xxx	E90000-E9FFFF	748000-74FFFF
59	64	32	SA234	11101010xxx	EA0000-EAFFFF	750000-757FFF
59	64	32	SA235	11101011xxx	EB0000-EBFFFF	758000-75FFFF
60	64	32	SA236	11101100xxx	EC0000-ECFFFF	760000-767FFF
60	64	32	SA237	11101101xxx	ED0000-EDFFFF	768000-76FFFF
60	64	32	SA238	11101110xxx	EE0000-EEFFFF	770000-777FFF
60	64	32	SA239	11101111xxx	EF0000-EFFFFF	778000-77FFFF
61	64	32	SA240	11110000xxx	F00000-FFFFFF	780000-787FFF

Sector Group	Sector Size		Sector	Sector Address A22-A12	Address Range	
	Byte Mode (Kbytes)	Word Mode (Kwords)			Byte Mode (x8)	Word Mode (x16)
61	64	32	SA241	11110001xxx	F10000-F1FFFF	788000-78FFFF
61	64	32	SA242	11110010xxx	F20000-F2FFFF	790000-797FFF
61	64	32	SA243	11110011xxx	F30000-F3FFFF	798000-79FFFF
62	64	32	SA244	11110100xxx	F40000-F4FFFF	7A0000-7A7FFF
62	64	32	SA245	11110101xxx	F50000-F5FFFF	7A8000-7AFFFF
62	64	32	SA246	11110110xxx	F60000-F6FFFF	7B0000-7B7FFF
62	64	32	SA247	11110111xxx	F70000-F7FFFF	7B8000-7BFFFF
63	64	32	SA248	11111000xxx	F80000-F8FFFF	7C0000-7C7FFF
63	64	32	SA249	11111001xxx	F90000-F9FFFF	7C8000-7CFFFF
63	64	32	SA250	11111010xxx	FA0000-FAFFFF	7D0000-7D7FFF
63	64	32	SA251	11111011xxx	FB0000-FBFFFF	7D8000-7DFFFF
64	64	32	SA252	11111100xxx	FC0000-FCFFFF	7E0000-7E7FFF
64	64	32	SA253	11111101xxx	FD0000-FDFFFF	7E8000-7EFFFF
64	64	32	SA254	11111110xxx	FE0000-FEFFFF	7F0000-7F7FFF
65	8	4	SA255	11111111000	FF0000-FF1FFF	7F8000-7F8FFF
66	8	4	SA256	11111111001	FF2000-FF3FFF	7F9000-7F9FFF
67	8	4	SA257	11111111010	FF4000-FF5FFF	7FA000-7FAFFF
68	8	4	SA258	11111111011	FF6000-FF7FFF	7FB000-7FBFFF
69	8	4	SA259	11111111100	FF8000-FF9FFF	7FC000-7FCFFF
70	8	4	SA260	11111111101	FFA000-FFBFFF	7FD000-7FDFFF
71	8	4	SA261	11111111110	FFC000-FFDFFF	7FE000-7FEFFF
72	8	4	SA262	11111111111	FFE000-FFFFFF	7FF000-7FFFFF

Top Boot Security Sector Addresses

Sector Size		Sector Address A21~A12	Address Range	
Byte Mode (bytes)	Word Mode (words)		Byte Mode (x8)	Word Mode (x16)
256	128	1111111111	FFFF00h-FFFFFFh	7FFF80h-7FFFFFh

Table 1. b: MX29LV128DB SECTOR GROUP ARCHITECTURE

Sector Group	Sector Size		Sector	Sector Address	Address Range	
	Byte Mode (Kbytes)	Word Mode (Kwords)		A22-A12	Byte Mode (x8)	Word Mode (x16)
1	8	4	SA0	00000000000	000000-001FFF	000000-000FFF
2	8	4	SA1	00000000001	002000-003FFF	001000-001FFF
3	8	4	SA2	00000000010	004000-005FFF	002000-002FFF
4	8	4	SA3	00000000011	006000-007FFF	003000-003FFF
5	8	4	SA4	00000000100	008000-009FFF	004000-004FFF
6	8	4	SA5	00000000101	00A000-00BFFF	005000-005FFF
7	8	4	SA6	00000000110	00C000-00DFFF	006000-006FFF
8	8	4	SA7	00000000111	00E000-00FFFF	007000-007FFF
9	64	32	SA8	00000001xxx	010000-01FFFF	008000-00FFFF
9	64	32	SA9	00000010xxx	020000-02FFFF	010000-017FFF
9	64	32	SA10	00000011xxx	030000-03FFFF	018000-01FFFF
10	64	32	SA11	00000100xxx	040000-04FFFF	020000-027FFF
10	64	32	SA12	00000101xxx	050000-05FFFF	028000-02FFFF
10	64	32	SA13	00000110xxx	060000-06FFFF	030000-037FFF
10	64	32	SA14	00000111xxx	070000-07FFFF	038000-03FFFF
11	64	32	SA15	00001000xxx	080000-08FFFF	040000-047FFF
11	64	32	SA16	00001001xxx	090000-09FFFF	048000-04FFFF
11	64	32	SA17	00001010xxx	0A0000-0AFFFF	050000-057FFF
11	64	32	SA18	00001011xxx	0B0000-0BFFFF	058000-05FFFF
12	64	32	SA19	00001100xxx	0C0000-0CFFFF	060000-067FFF
12	64	32	SA20	00001101xxx	0D0000-0DFFFF	068000-06FFFF
12	64	32	SA21	00001110xxx	0E0000-0EFFFF	070000-077FFF
12	64	32	SA22	00001111xxx	0F0000-0FFFFF	078000-07FFFF
13	64	32	SA23	00010000xxx	100000-10FFFF	080000-087FFF
13	64	32	SA24	00010001xxx	110000-11FFFF	088000-08FFFF
13	64	32	SA25	00010010xxx	120000-12FFFF	090000-097FFF
13	64	32	SA26	00010011xxx	130000-13FFFF	098000-09FFFF
14	64	32	SA27	00010100xxx	140000-14FFFF	0A0000-0A7FFF
14	64	32	SA28	00010101xxx	150000-15FFFF	0A8000-0AFFFF
14	64	32	SA29	00010110xxx	160000-16FFFF	0B0000-0B7FFF
14	64	32	SA30	00010111xxx	170000-17FFFF	0B8000-0BFFFF
15	64	32	SA31	00011000xxx	180000-18FFFF	0C0000-0C7FFF
15	64	32	SA32	00011001xxx	190000-19FFFF	0C8000-0CFFFF
15	64	32	SA33	00011010xxx	1A0000-1AFFFF	0D0000-0D7FFF
15	64	32	SA34	00011011xxx	1B0000-1BFFFF	0D8000-0DFFFF
16	64	32	SA35	00011100xxx	1C0000-1CFFFF	0E0000-0E7FFF
16	64	32	SA36	00011101xxx	1D0000-1DFFFF	0E8000-0EFFFF
16	64	32	SA37	00011110xxx	1E0000-1EFFFF	0F0000-0F7FFF
16	64	32	SA38	00011111xxx	1F0000-1FFFFF	0F8000-0FFFFF

Sector Group	Sector Size		Sector	Sector Address A22-A12	Address Range	
	Byte Mode (Kbytes)	Word Mode (Kwords)			Byte Mode (x8)	Word Mode (x16)
17	64	32	SA39	00100000xxx	200000-20FFFF	100000-107FFF
17	64	32	SA40	00100001xxx	210000-21FFFF	108000-10FFFF
17	64	32	SA41	00100010xxx	220000-22FFFF	110000-117FFF
17	64	32	SA42	00100011xxx	230000-23FFFF	118000-11FFFF
18	64	32	SA43	00100100xxx	240000-24FFFF	120000-127FFF
18	64	32	SA44	00100101xxx	250000-25FFFF	128000-12FFFF
18	64	32	SA45	00100110xxx	260000-26FFFF	130000-137FFF
18	64	32	SA46	00100111xxx	270000-27FFFF	138000-13FFFF
19	64	32	SA47	00101000xxx	280000-28FFFF	140000-147FFF
19	64	32	SA48	00101001xxx	290000-29FFFF	148000-14FFFF
19	64	32	SA49	00101010xxx	2A0000-2AFFFF	150000-157FFF
19	64	32	SA50	00101011xxx	2B0000-2BFFFF	158000-15FFFF
20	64	32	SA51	00101100xxx	2C0000-2CFFFF	160000-167FFF
20	64	32	SA52	00101101xxx	2D0000-2DFFFF	168000-16FFFF
20	64	32	SA53	00101110xxx	2E0000-2EFFFF	170000-177FFF
20	64	32	SA54	00101111xxx	2F0000-2FFFFF	178000-17FFFF
21	64	32	SA55	00110000xxx	300000-30FFFF	180000-187FFF
21	64	32	SA56	00110001xxx	310000-31FFFF	188000-18FFFF
21	64	32	SA57	00110010xxx	320000-32FFFF	190000-197FFF
21	64	32	SA58	00110011xxx	330000-33FFFF	198000-19FFFF
22	64	32	SA59	00110100xxx	340000-34FFFF	1A0000-1A7FFF
22	64	32	SA60	00110101xxx	350000-35FFFF	1A8000-1AFFFF
22	64	32	SA61	00110110xxx	360000-36FFFF	1B0000-1B7FFF
22	64	32	SA62	00110111xxx	370000-37FFFF	1B8000-1BFFFF
23	64	32	SA63	00111000xxx	380000-38FFFF	1C0000-1C7FFF
23	64	32	SA64	00111001xxx	390000-39FFFF	1C8000-1CFFFF
23	64	32	SA65	00111010xxx	3A0000-3AFFFF	1D0000-1D7FFF
23	64	32	SA66	00111011xxx	3B0000-3BFFFF	1D8000-1DFFFF
24	64	32	SA67	00111100xxx	3C0000-3CFFFF	1E0000-1E7FFF
24	64	32	SA68	00111101xxx	3D0000-3DFFFF	1E8000-1EFFFF
24	64	32	SA69	00111110xxx	3E0000-3EFFFF	1F0000-1F7FFF
24	64	32	SA70	00111111xxx	3F0000-3FFFFF	1F8000-1FFFFF
25	64	32	SA71	01000000xxx	400000-40FFFF	200000-207FFF
25	64	32	SA72	01000001xxx	410000-41FFFF	208000-20FFFF
25	64	32	SA73	01000010xxx	420000-42FFFF	210000-217FFF
25	64	32	SA74	01000011xxx	430000-43FFFF	218000-21FFFF
26	64	32	SA75	01000100xxx	440000-44FFFF	220000-227FFF
26	64	32	SA76	01000101xxx	450000-45FFFF	228000-22FFFF
26	64	32	SA77	01000110xxx	460000-46FFFF	230000-237FFF
26	64	32	SA78	01000111xxx	470000-47FFFF	238000-23FFFF
27	64	32	SA79	01001000xxx	480000-48FFFF	240000-247FFF

Sector Group	Sector Size		Sector	Sector Address A22-A12	Address Range	
	Byte Mode (Kbytes)	Word Mode (Kwords)			Byte Mode (x8)	Word Mode (x16)
27	64	32	SA80	01001001xxx	490000-49FFFF	248000-24FFFF
27	64	32	SA81	01001010xxx	4A0000-4AFFFF	250000-257FFF
27	64	32	SA82	01001011xxx	4B0000-4BFFFF	258000-25FFFF
28	64	32	SA83	01001100xxx	4C0000-4CFFFF	260000-267FFF
28	64	32	SA84	01001101xxx	4D0000-4DFFFF	268000-26FFFF
28	64	32	SA85	01001110xxx	4E0000-4EFFFF	270000-277FFF
28	64	32	SA86	01001111xxx	4F0000-4FFFFF	278000-27FFFF
29	64	32	SA87	01010000xxx	500000-50FFFF	280000-287FFF
29	64	32	SA88	01010001xxx	510000-51FFFF	288000-28FFFF
29	64	32	SA89	01010010xxx	520000-52FFFF	290000-297FFF
29	64	32	SA90	01010011xxx	530000-53FFFF	298000-29FFFF
30	64	32	SA91	01010100xxx	540000-54FFFF	2A0000-2A7FFF
30	64	32	SA92	01010101xxx	550000-55FFFF	2A8000-2AFFFF
30	64	32	SA93	01010110xxx	560000-56FFFF	2B0000-2B7FFF
30	64	32	SA94	01010111xxx	570000-57FFFF	2B8000-2BFFFF
31	64	32	SA95	01011000xxx	580000-58FFFF	2C0000-2C7FFF
31	64	32	SA96	01011001xxx	590000-59FFFF	2C8000-2CFFFF
31	64	32	SA97	01011010xxx	5A0000-5AFFFF	2D0000-2D7FFF
31	64	32	SA98	01011011xxx	5B0000-5BFFFF	2D8000-2DFFFF
32	64	32	SA99	01011100xxx	5C0000-5CFFFF	2E0000-2E7FFF
32	64	32	SA100	01011101xxx	5D0000-5DFFFF	2E8000-2EFFFF
32	64	32	SA101	01011110xxx	5E0000-5EFFFF	2F0000-2F7FFF
32	64	32	SA102	01011111xxx	5F0000-5FFFFF	2F8000-2FFFFF
33	64	32	SA103	01100000xxx	600000-60FFFF	300000-307FFF
33	64	32	SA104	01100001xxx	610000-61FFFF	308000-30FFFF
33	64	32	SA105	01100010xxx	620000-62FFFF	310000-317FFF
33	64	32	SA106	01100011xxx	630000-63FFFF	318000-31FFFF
34	64	32	SA107	01100100xxx	640000-64FFFF	320000-327FFF
34	64	32	SA108	01100101xxx	650000-65FFFF	328000-32FFFF
34	64	32	SA109	01100110xxx	660000-66FFFF	330000-337FFF
34	64	32	SA110	01100111xxx	670000-67FFFF	338000-33FFFF
35	64	32	SA111	01101000xxx	680000-68FFFF	340000-347FFF
35	64	32	SA112	01101001xxx	690000-69FFFF	348000-34FFFF
35	64	32	SA113	01101010xxx	6A0000-6AFFFF	350000-357FFF
35	64	32	SA114	01101011xxx	6B0000-6BFFFF	358000-35FFFF
36	64	32	SA115	01101100xxx	6C0000-6CFFFF	360000-367FFF
36	64	32	SA116	01101101xxx	6D0000-6DFFFF	368000-36FFFF
36	64	32	SA117	01101110xxx	6E0000-6EFFFF	370000-377FFF
36	64	32	SA118	01101111xxx	6F0000-6FFFFF	378000-37FFFF
37	64	32	SA119	01110000xxx	700000-70FFFF	380000-387FFF
37	64	32	SA120	01110001xxx	710000-71FFFF	388000-38FFFF

Sector Group	Sector Size		Sector	Sector Address A22-A12	Address Range	
	Byte Mode (Kbytes)	Word Mode (Kwords)			Byte Mode (x8)	Word Mode (x16)
37	64	32	SA121	01110010xxx	720000-72FFFF	390000-397FFF
37	64	32	SA122	01110011xxx	730000-73FFFF	398000-39FFFF
38	64	32	SA123	01110100xxx	740000-74FFFF	3A0000-3A7FFF
38	64	32	SA124	01110101xxx	750000-75FFFF	3A8000-3AFFFF
38	64	32	SA125	01110110xxx	760000-76FFFF	3B0000-3B7FFF
38	64	32	SA126	01110111xxx	770000-77FFFF	3B8000-3BFFFF
39	64	32	SA127	01111000xxx	780000-78FFFF	3C0000-3C7FFF
39	64	32	SA128	01111001xxx	790000-79FFFF	3C8000-3CFFFF
39	64	32	SA129	01111010xxx	7A0000-7AFFFF	3D0000-3D7FFF
39	64	32	SA130	01111011xxx	7B0000-7BFFFF	3D8000-3DFFFF
40	64	32	SA131	01111100xxx	7C0000-7CFFFF	3E0000-3E7FFF
40	64	32	SA132	01111101xxx	7D0000-7DFFFF	3E8000-3EFFFF
40	64	32	SA133	01111110xxx	7E0000-7EFFFF	3F0000-3F7FFF
40	64	32	SA134	01111111xxx	7F0000-7FFFFF	3F8000-3FFFFF
41	64	32	SA135	10000000xxx	800000-80FFFF	400000-407FFF
41	64	32	SA136	10000001xxx	810000-81FFFF	408000-40FFFF
41	64	32	SA137	10000010xxx	820000-82FFFF	410000-417FFF
41	64	32	SA138	10000011xxx	830000-83FFFF	418000-41FFFF
42	64	32	SA139	10000100xxx	840000-84FFFF	420000-427FFF
42	64	32	SA140	10000101xxx	850000-85FFFF	428000-42FFFF
42	64	32	SA141	10000110xxx	860000-86FFFF	430000-437FFF
42	64	32	SA142	10000111xxx	870000-87FFFF	438000-43FFFF
43	64	32	SA143	10001000xxx	880000-88FFFF	440000-447FFF
43	64	32	SA144	10001001xxx	890000-89FFFF	448000-44FFFF
43	64	32	SA145	10001010xxx	8A0000-8AFFFF	450000-457FFF
43	64	32	SA146	10001011xxx	8B0000-8BFFFF	458000-45FFFF
44	64	32	SA147	10001100xxx	8C0000-8CFFFF	460000-467FFF
44	64	32	SA148	10001101xxx	8D0000-8DFFFF	468000-46FFFF
44	64	32	SA149	10001110xxx	8E0000-8EFFFF	470000-477FFF
44	64	32	SA150	10001111xxx	8F0000-8FFFFF	478000-47FFFF
45	64	32	SA151	10010000xxx	900000-90FFFF	480000-487FFF
45	64	32	SA152	10010001xxx	910000-91FFFF	488000-48FFFF
45	64	32	SA153	10010010xxx	920000-92FFFF	490000-497FFF
45	64	32	SA154	10010011xxx	930000-93FFFF	498000-49FFFF
46	64	32	SA155	10010100xxx	940000-94FFFF	4A0000-4A7FFF
46	64	32	SA156	10010101xxx	950000-95FFFF	4A8000-4AFFFF
46	64	32	SA157	10010110xxx	960000-96FFFF	4B0000-4B7FFF
46	64	32	SA158	10010111xxx	970000-97FFFF	4B8000-4BFFFF
47	64	32	SA159	10011000xxx	980000-98FFFF	4C0000-4C7FFF
47	64	32	SA160	10011001xxx	990000-99FFFF	4C8000-4CFFFF
47	64	32	SA161	10011010xxx	9A0000-9AFFFF	4D0000-4D7FFF
47	64	32	SA162	10011011xxx	9B0000-9BFFFF	4D8000-4DFFFF

Sector Group	Sector Size		Sector	Sector Address A22-A12	Address Range	
	Byte Mode (Kbytes)	Word Mode (Kwords)			Byte Mode (x8)	Word Mode (x16)
48	64	32	SA163	10011100xxx	9C0000-9CFFFF	4E0000-4E7FFF
48	64	32	SA164	10011101xxx	9D0000-9DFFFF	4E8000-4EFFFF
48	64	32	SA165	10011110xxx	9E0000-9EFFFF	4F0000-4F7FFF
48	64	32	SA166	10011111xxx	9F0000-9FFFFF	4F8000-4FFFFF
49	64	32	SA167	10100000xxx	A00000-A0FFFF	500000-507FFF
49	64	32	SA168	10100001xxx	A10000-A1FFFF	508000-50FFFF
49	64	32	SA169	10100010xxx	A20000-A2FFFF	510000-517FFF
49	64	32	SA170	10100011xxx	A30000-A3FFFF	518000-51FFFF
50	64	32	SA171	10100100xxx	A40000-A4FFFF	520000-527FFF
50	64	32	SA172	10100101xxx	A50000-A5FFFF	528000-52FFFF
50	64	32	SA173	10100110xxx	A60000-A6FFFF	530000-537FFF
50	64	32	SA174	10100111xxx	A70000-A7FFFF	538000-53FFFF
51	64	32	SA175	10101000xxx	A80000-A8FFFF	540000-547FFF
51	64	32	SA176	10101001xxx	A90000-A9FFFF	548000-54FFFF
51	64	32	SA177	10101010xxx	AA0000-AAFFFF	550000-557FFF
51	64	32	SA178	10101011xxx	AB0000-ABFFFF	558000-55FFFF
52	64	32	SA179	10101100xxx	AC0000-ACFFFF	560000-567FFF
52	64	32	SA180	10101101xxx	AD0000-ADFFFF	568000-56FFFF
52	64	32	SA181	10101110xxx	AE0000-AEFFFF	570000-577FFF
52	64	32	SA182	10101111xxx	AF0000-AFFFFF	578000-57FFFF
53	64	32	SA183	10110000xxx	B00000-B0FFFF	580000-587FFF
53	64	32	SA184	10110001xxx	B10000-B1FFFF	588000-58FFFF
53	64	32	SA185	10110010xxx	B20000-B2FFFF	590000-597FFF
53	64	32	SA186	10110011xxx	B30000-B3FFFF	598000-59FFFF
54	64	32	SA187	10110100xxx	B40000-B4FFFF	5A0000-5A7FFF
54	64	32	SA188	10110101xxx	B50000-B5FFFF	5A8000-5AFFFF
54	64	32	SA189	10110110xxx	B60000-B6FFFF	5B0000-5B7FFF
54	64	32	SA190	10110111xxx	B70000-B7FFFF	5B8000-5BFFFF
55	64	32	SA191	10111000xxx	B80000-B8FFFF	5C0000-5C7FFF
55	64	32	SA192	10111001xxx	B90000-B9FFFF	5C8000-5CFFFF
55	64	32	SA193	10111010xxx	BA0000-BAFFFF	5D0000-5D7FFF
55	64	32	SA194	10111011xxx	BB0000-BBFFFF	5D8000-5DFFFF
56	64	32	SA195	10111100xxx	BC0000-BCFFFF	5E0000-5E7FFF
56	64	32	SA196	10111101xxx	BD0000-BDFFFF	5E8000-5EFFFF
56	64	32	SA197	10111110xxx	BE0000-BEFFFF	5F0000-5F7FFF
56	64	32	SA198	10111111xxx	BF0000-BFFFFF	5F8000-5FFFFF
57	64	32	SA199	11000000xxx	C00000-C0FFFF	600000-607FFF
57	64	32	SA200	11000001xxx	C10000-C1FFFF	608000-60FFFF
57	64	32	SA201	11000010xxx	C20000-C2FFFF	610000-617FFF
57	64	32	SA202	11000011xxx	C30000-C3FFFF	618000-61FFFF

Sector Group	Sector Size		Sector	Sector Address	Address Range	
	Byte Mode (Kbytes)	Word Mode (Kwords)		A22-A12	Byte Mode (x8)	Word Mode (x16)
58	64	32	SA203	11000100xxx	C40000-C4FFFF	620000-627FFF
58	64	32	SA204	11000101xxx	C50000-C5FFFF	628000-62FFFF
58	64	32	SA205	11000110xxx	C60000-C6FFFF	630000-637FFF
58	64	32	SA206	11000111xxx	C70000-C7FFFF	638000-63FFFF
59	64	32	SA207	11001000xxx	C80000-C8FFFF	640000-647FFF
59	64	32	SA208	11001001xxx	C90000-C9FFFF	648000-64FFFF
59	64	32	SA209	11001010xxx	CA0000-CAFFFF	650000-657FFF
59	64	32	SA210	11001011xxx	CB0000-CBFFFF	658000-65FFFF
60	64	32	SA211	11001100xxx	CC0000-CCFFFF	660000-667FFF
60	64	32	SA212	11001101xxx	CD0000-CDFFFF	668000-66FFFF
60	64	32	SA213	11001110xxx	CE0000-CEFFFF	670000-677FFF
60	64	32	SA214	11001111xxx	CF0000-CFFFFF	678000-67FFFF
61	64	32	SA215	11010000xxx	D00000-D0FFFF	680000-687FFF
61	64	32	SA216	11010001xxx	D10000-D1FFFF	688000-68FFFF
61	64	32	SA217	11010010xxx	D20000-D2FFFF	690000-697FFF
61	64	32	SA218	11010011xxx	D30000-D3FFFF	698000-69FFFF
62	64	32	SA219	11010100xxx	D40000-D4FFFF	6A0000-6A7FFF
62	64	32	SA220	11010101xxx	D50000-D5FFFF	6A8000-6AFFFF
62	64	32	SA221	11010110xxx	D60000-D6FFFF	6B0000-6B7FFF
62	64	32	SA222	11010111xxx	D70000-D7FFFF	6B8000-6BFFFF
63	64	32	SA223	11011000xxx	D80000-D8FFFF	6C0000-6C7FFF
63	64	32	SA224	11011001xxx	D90000-D9FFFF	6C8000-6CFFFF
63	64	32	SA225	11011010xxx	DA0000-DAFFFF	6D0000-6D7FFF
63	64	32	SA226	11011011xxx	DB0000-DBFFFF	6D8000-6DFFFF
64	64	32	SA227	11011100xxx	DC0000-DCFFFF	6E0000-6E7FFF
64	64	32	SA228	11011101xxx	DD0000-DDFFFF	6E8000-6EFFFF
64	64	32	SA229	11011110xxx	DE0000-DEFFFF	6F0000-6F7FFF
64	64	32	SA230	11011111xxx	DF0000-DFFFFF	6F8000-6FFFFF
65	64	32	SA231	11100000xxx	E00000-E0FFFF	700000-707FFF
65	64	32	SA232	11100001xxx	E10000-E1FFFF	708000-70FFFF
65	64	32	SA233	11100010xxx	E20000-E2FFFF	710000-717FFF
65	64	32	SA234	11100011xxx	E30000-E3FFFF	718000-71FFFF
66	64	32	SA235	11100100xxx	E40000-E4FFFF	720000-727FFF
66	64	32	SA236	11100101xxx	E50000-E5FFFF	728000-72FFFF
66	64	32	SA237	11100110xxx	E60000-E6FFFF	730000-737FFF
66	64	32	SA238	11100111xxx	E70000-E7FFFF	738000-73FFFF
67	64	32	SA239	11101000xxx	E80000-E8FFFF	740000-747FFF
67	64	32	SA240	11101001xxx	E90000-E9FFFF	748000-74FFFF
67	64	32	SA241	11101010xxx	EA0000-EAFFFF	750000-757FFF
67	64	32	SA242	11101011xxx	EB0000-EBFFFF	758000-75FFFF

Sector Group	Sector Size		Sector	Sector Address A22-A12	Address Range	
	Byte Mode (Kbytes)	Word Mode (Kwords)			Byte Mode (x8)	Word Mode (x16)
68	64	32	SA243	11101100xxx	EC0000-ECFFFF	760000-767FFF
68	64	32	SA244	11101101xxx	ED0000-EDFFFF	768000-76FFFF
68	64	32	SA245	11101110xxx	EE0000-EEFFFF	770000-777FFF
68	64	32	SA246	11101111xxx	EF0000-EFFFFF	778000-77FFFF
69	64	32	SA247	11110000xxx	F00000-F0FFFF	780000-787FFF
69	64	32	SA248	11110001xxx	F10000-F1FFFF	788000-78FFFF
69	64	32	SA249	11110010xxx	F20000-F2FFFF	790000-797FFF
69	64	32	SA250	11110011xxx	F30000-F3FFFF	798000-79FFFF
70	64	32	SA251	11110100xxx	F40000-F4FFFF	7A0000-7A7FFF
70	64	32	SA252	11110101xxx	F50000-F5FFFF	7A8000-7AFFFF
70	64	32	SA253	11110110xxx	F60000-F6FFFF	7B0000-7B7FFF
70	64	32	SA254	11110111xxx	F70000-F7FFFF	7B8000-7BFFFF
71	64	32	SA255	11111000xxx	F80000-F8FFFF	7C0000-7C7FFF
71	64	32	SA256	11111001xxx	F90000-F9FFFF	7C8000-7CFFFF
71	64	32	SA257	11111010xxx	FA0000-FAFFFF	7D0000-7D7FFF
71	64	32	SA258	11111011xxx	FB0000-FBFFFF	7D8000-7DFFFF
72	64	32	SA259	11111100xxx	FC0000-FCFFFF	7E0000-7E7FFF
72	64	32	SA260	11111101xxx	FD0000-FDFFFF	7E8000-7EFFFF
72	64	32	SA261	11111110xxx	FE0000-FEFFFF	7F0000-7F7FFF
72	64	32	SA262	11111111xxx	FF0000-FFFFFF	7F8000-7FFFFF

Bottom Boot Security Sector Addresses

Sector Size		Sector Address A21~A12	Address Range	
Byte Mode (bytes)	Word Mode (words)		Byte Mode (x8)	Word Mode (x16)
256	128	0000000000	000000h-0000FFh	000000h-00007Fh

FUNCTIONAL OPERATION DESCRIPTION

READ OPERATION

To perform a read operation, the system addresses the desired memory array or status register location by providing its address on the address pins and simultaneously enabling the chip by driving CE# & OE# LOW, and WE# HIGH. After the Tce and Toe timing requirements have been met, the system can read the contents of the addressed location by reading the Data (I/O) pins. If either the CE# or OE# is held HIGH, the outputs will remain tri-stated and no data will appear on the output pins.

WRITE OPERATION

To perform a write operation, the system provides the desired address on the address pins, enables the chip by asserting CE# LOW, and disables the Data (I/O) pins by holding OE# HIGH. The system then places data to be written on the Data (I/O) pins and pulses WE# LOW. The device captures the address information on the falling edge of WE# and the data on the rising edge of WE#. To see an example, please refer to the timing diagram in Figure 1 on Page 42. The system is not allowed to write invalid commands (commands not defined in this datasheet) to the device. Writing an invalid command may put the device in an undefined state.

DEVICE RESET

Driving the RESET# pin LOW for a period of Trp or more will return the device to Read mode. If the device is in the middle of a program or erase operation, the reset operation will take at most a period of Tready1 before the device returns to Read mode. Until the device does returns to Read mode, the RY/BY# pin will remain Low (Busy Status).

When the RESET# pin is held at GND±0.3V, the device only consumes standby (Isbr) current. However, the device draws larger current if the RESET# pin is held at a voltage greater than GND+0.3V and less than or equal to Vil.

It is recommended to tie the system reset signal to the RESET# pin of the flash memory. This allows the device to be reset with the system and puts it in a state where the system can immediately begin reading boot code from it.

STANDBY MODE

The device enters Standby mode whenever the RESET# and CE# pins are both held High. While in this mode, WE# and OE# will be ignored, all Data Output pins will be in a high impedance state, and the device will draw minimal (Isb) current.

OUTPUT DISABLE

While in active mode (RESET# HIGH and CE# LOW), the OE# pin controls the state of the output pins. If OE# is held HIGH, all Data (I/O) pins will remain tri-stated. If held LOW, the Byte or Word Data (I/O) pins will drive data.

BYTE/WORD SELECTION

The BYTE# input pin is used to select the organization of the array data and how the data is input/output on the Data (I/O) pins. If the BYTE# pin is held HIGH, Word mode will be selected and all 16 data lines (Q0 to Q15) will be active.

FUNCTIONAL OPERATION DESCRIPTION (cont'd)

If BYTE# is forced LOW, Byte mode will be active and only data lines Q0 to Q7 will be active. Data lines Q8 to Q14 will remain in a high impedance state and Q15 becomes the A-1 address input pin.

HARDWARE WRITE PROTECT

By driving the WP#/ACC pin LOW, the outermost two boot sectors are protected from all erase/program operations. If WP#/ACC is held HIGH (Vih to VCC), these two outermost sectors revert to their previously protected/unprotected status.

ACCELERATED PROGRAMMING OPERATION

By applying high voltage (Vhv) to the WP#/ACC pin, the device will enter the Accelerated Programming mode. This mode permits the system to skip the normal command unlock sequences and program byte/word locations directly. Typically, this mode provides a 30% reduction in overall programming times. During accelerated programming, the current drawn from the WP#/ACC pin is no more than ICP1.

TEMPORARY SECTOR GROUP UNPROTECT OPERATION

The system can apply Vhv to the RESET# pin to place the device in Temporary Unprotect mode. In this mode, previously protected sectors can be programmed/erased just as though they were unprotected. The device returns to normal operation once Vhv is removed from the RESET# pin and previously protected sectors will once again be protected.

SECTOR GROUP PROTECT OPERATION

The MX29LV128D T/B provides user programmable protection against program/erase operations for selected sectors. Most sectors cannot protected individually. Instead, they are bound in groups of four or less called Sector-Groups. Protection is available for individual Sector-Groups, which includes all member sectors. Boot sectors are the exception to this rule as they are assigned unique Sector-Group addresses and can be protected individually without protecting any adjacent sectors or Sector-Groups. The three sectors adjacent to the boot sectors form a non-standard Sector-Group. Please refer to Table 1a and Table 1b which show all Sector-Group assignments.

During the protection operation, the sector address of any sector within a Sector-Group may be used to specify the Sector-Group being protected.

There are two methods available to protect Sector-Groups. The first and preferred method is activated by applying Vhv on the RESET# pin and following the timing in Figure 13 and the algorithm shown in Figure 14-1. This is a command operation that can be performed either on an external programmer or in-circuit by the system controller. The second method is strictly a bus operation and is entered by asserting Vhv on A9 and OE# pins, with A6 and CE# at Vil. The protection operation begins at the falling edge of WE# and terminates at the rising edge. Contact Macronix for more details on this method.

FUNCTIONAL OPERATION DESCRIPTION (cont'd)

CHIP UNPROTECT OPERATION

The Chip Unprotect operation unprotects all sectors within the device. It is standard procedure and highly recommended to protect all Sector-Groups prior using the Chip Unprotect operation. This will prevent possible damage to the Sector-Group protection logic. All Sector Groups are unprotected when shipped from the factory, so this operation is only necessary if the user has previously protected any Sector-Groups and wishes to unprotect them now.

MX29LV128D T/B provides two methods for unprotecting the entire chip. The first and preferred method is entered by applying Vhv on RESET# pin and following the timing diagram in Figure 13 and using the algorithm shown in Figure 14-2.

The second method is entered by asserting Vhv on A9 and OE# pins, with A6 at Vih and CE# at Vil. The protection operation begins at the falling edge of WE# and terminates at the rising edge. Contact Macronix for more details on this method.

AUTOMATIC SELECT BUS OPERATIONS

The following five bus operations require A9 to be raised to Vhv. Please see AUTOMATIC SELECT COMMAND SEQUENCE in the COMMAND OPERATIONS section for details of equivalent command operations that do not require the use of Vhv.

SECTOR LOCK STATUS VERIFICATION

To determine the protected state of any sector using bus operations, the system performs a READ OPERATION with A9 raised to Vhv, the sector address applied to address pins A22 to A12, address pins A6 & A0 held LOW, and address pin A1 held HIGH. If data bit Q0 is LOW, the sector is not protected, and if Q0 is HIGH, the sector is protected.

READ SILICON ID MANUFACTURER CODE

To determine the Silicon ID Manufacturer Code, the system performs a READ OPERATION with A9 raised to Vhv and address pins A6, A1, & A0 held LOW. The Macronix ID code of C2h should be present on data bits Q0 to Q7.

READ SILICON ID MX29LV128DT CODE

To verify the Silicon ID MX29LV128DT Code, the system performs a READ OPERATION with A9 raised to Vhv, address pins A6 & A1 held LOW, and address pin A0 held HIGH. The MX29LV128DT code of 7Eh should be present on data bits Q0 to Q7. Q15 to Q8 will be tri-stated unless Word mode is selected. In this case, Q15 to Q8 will output the value 22h.

READ SILICON ID MX29LV128DB CODE

To verify the Silicon ID MX29LV128DB Code, the system performs a READ OPERATION with A9 raised to Vhv, address pins A6 & A1 held LOW, and address pin A0 held HIGH. The MX29LV128DT code of 7Ah should be present on data bits Q0 to Q7. Q15 to Q8 will be tri-stated unless Word mode is selected. In this case, Q15 to Q8 will output the code 22h.

FUNCTIONAL OPERATION DESCRIPTION (cont'd)

READ INDICATOR BIT (Q7) FOR SECURITY SECTOR

To determine if the Security Sector has been locked at the factory, the system performs a READ OPERATION with A9 raised to Vhv, address pin A6 held LOW, and address pins A1 & A0 held HIGH. If the Security Sector has been locked at the factory, the code 98h(T)/88h(B) will be present on data bits Q0 to Q7. Otherwise, the factory unlocked code of 18h(T)/08h(B) will be present.

INHERENT DATA PROTECTION

To avoid accidental erasure or programming of the device, the device is automatically reset to Read mode during power up. Additionally, the following design features protect the device from unintended data corruption.

COMMAND COMPLETION

Only after the successful completion of the specified command sets will the device begin its erase or program operation. If any command sequence is interrupted or given an invalid command, the device immediately returns to Read mode.

LOW VCC WRITE INHIBIT

The device refuses to accept any write command when Vcc is less than VLKO. This prevents data from spuriously being altered during power-up, power-down, or temporary power interruptions. The device automatically resets itself when Vcc is lower than VLKO and write cycles are ignored until Vcc is greater than VLKO. The system must provide proper signals on control pins after Vcc rises above VLKO to avoid unintentional program or erase operations.

WRITE PULSE "GLITCH" PROTECTION

CE#, WE#, OE# pulses shorter than 5ns are treated as glitches and will not be regarded as an effective write cycle.

LOGICAL INHIBIT

A valid write cycle requires both CE# and WE# at Vil with OE# at Vih. Write cycle is ignored when either CE# at Vih, WE# a Vih, or OE# at Vil.

POWER-UP SEQUENCE

Upon power up, the MX29LV128D T/B is placed in Read mode. Furthermore, program or erase operation will begin only after successful completion of specified command sequences.

FUNCTIONAL OPERATION DESCRIPTION (cont'd)

POWER-UP WRITE INHIBIT

When WE#, CE# is held at Vil and OE# is held at Vih during power up, the device ignores the first command on the rising edge of WE#.

POWER SUPPLY DECOUPLING

A 0.1uF capacitor should be connected between the Vcc and GND to reduce the noise effect.

TABLE 3. MX29LV128D T/B COMMAND DEFINITIONS

Command		Read Mode	Reset Mode	Automatic Select								Security Sector Region		Exit Security Sector	
				Silicon ID		Device ID		Factory Protect Verify		Sector Protect Verify					
				Word	Byte	Word	Byte	Word	Byte	Word	Byte	Word	Byte	Word	Byte
1st Bus Cycle	Addr	Addr	XXX	555	AAA	555	AAA	555	AAA	555	AAA	555	AAA	555	AAA
	Data	Data	F0	AA	AA	AA	AA	AA	AA	AA	AA	AA	AA	AA	AA
2nd Bus Cycle	Addr			2AA	555	2AA	555	2AA	555	2AA	555	2AA	555	2AA	555
	Data			55	55	55	55	55	55	55	55	55	55	55	55
3rd Bus Cycle	Addr			555	AAA	555	AAA	555	AAA	555	AAA	555	AAA	555	AAA
	Data			90	90	90	90	90	90	90	90	88	88	90	90
4th Bus Cycle	Addr			X00	X00	X01	X02	X03	X06	(Sector) X02	(Sector) X04			XXX	XXX
	Data			C2h	C2h	ID	ID	98/18(T) 88/08(B)		00/01	00/01			00	00
5th Bus Cycle	Addr														
	Data														
6th Bus Cycle	Addr														
	Data														

Command		Program		Chip Erase		Sector Erase		CFI Read		Erase Suspend	Erase Resume
		Word	Byte	Word	Byte	Word	Byte	Word	Byte		
1st Bus	Addr	555	AAA	555	AAA	555	AAA	55	AA	Sector	Sector
Cycle	Data	AA	AA	AA	AA	AA	AA	98	98	B0	30
2nd Bus	Addr	2AA	555	2AA	555	2AA	555				
Cycle	Data	55	55	55	55	55	55				
3rd Bus	Addr	555	AAA	555	AAA	555	AAA				
Cycle	Data	A0	A0	80	80	80	80				
4th Bus	Addr	Addr	Addr	555	AAA	555	AAA				
Cycle	Data	Data	Data	AA	AA	AA	AA				
5th Bus	Addr			2AA	555	2AA	555				
Cycle	Data			55	55	55	55				
6th Bus	Addr			555	AAA	Sector	Sector				
Cycle	Data			10	10	30	30				

WA= Write Address
WD= Write Data
SA= Sector Address
WC= Word Count

Note: ID 227Eh(Top), 227Ah(Bottom) for Word Mode
ID 7Eh(Top), 7Ah(Bottom) for Byte Mode

COMMAND OPERATIONS

READING THE MEMORY ARRAY

Read mode is the default state after power up or after a reset operation. To perform a read operation, please refer to READ OPERATION in the BUS OPERATIONS section above.

If the device receives an Erase Suspend command while in the Sector Erase state, the erase operation will pause (after a time delay not exceeding Tready1) and the device will enter Erase-Suspended Read mode. While in the Erase-Suspended Read mode, data can be programmed or read from any sector not being erased. Reading from addresses within sector(s) being erased will only return the contents of the status register, which is in fact how the current status of the device can be determined.

If a program command is issued to any inactive (not currently being erased) sector during Erase-Suspended Read mode, the device will perform the program operation and automatically return to Erase-Suspended Read mode after the program operation completes successfully.

While in Erase-Suspended Read mode, an Erase Resume command must be issued by the system to reactivate the erase operation. The erase operation will resume from where is was suspended and will continue until it completes successfully or another Erase Suspend command is received.

After the memory device completes an embedded operation (automatic Chip Erase, Sector Erase, or Program) successfully, it will automatically return to Read mode and data can be read from any address in the array. If the embedded operation fails to complete, as indicated by status register bit Q5 (exceeds time limit flag) going HIGH during the operations, the system must perform a reset operation to return the device to Read mode.

There are several states that require a reset operation to return to Read mode:

1. A program or erase failure--indicated by status register bit Q5 going HIGH during the operation. Failures during either of these states will prevent the device from automatically returning to Read mode.

2. The device is in Auto Select mode or CFI mode. These two states remain active until they are terminated by a reset operation.

In the two situations above, if a reset operation (either hardware reset or software reset command) is not performed, the device will not return to Read mode and the system will not be able to read array data.

AUTOMATIC PROGRAMMING OF THE MEMORY ARRAY

The MX29LV128D T/B provides the user the ability to program the memory array in Byte mode or Word mode. As long as the users enters the correct cycle defined in the Table 3 (including 2 unlock cycles and the A0H program command), any byte or word data provided on the data lines by the system will automatically be programmed into the array at the specified location.

After the program command sequence has been executed, the internal write state machine (WSM) automatically executes the algorithms and timings necessary for programming and verification, which includes generating suitable program pulses, checking cell threshold voltage margins, and repeating the program pulse if any cells do not pass verification or have low margins. The internal controller protects cells that do pass verification and margin tests from being over-programmed by inhibiting further program pulses to these passing cells as weaker cells continue to be programmed.

With the internal WSM automatically controlling the programming process, the user only needs to enter the program command and data once.

COMMAND OPERATIONS (cont'd)

AUTOMATIC PROGRAMMING OF THE MEMORY ARRAY (cont'd)

Programming will only change the bit status from "1" to "0". It is not possible to change the bit status from "0" to "1" by programming. This can only be done by an erase operation. Furthermore, the internal write verification only checks and detects errors in cases where a "1" is not successfully programmed to "0".

Any commands written to the device during programming will be ignored except hardware reset, which will terminate the program operation after a period of time no more than Tready1. When the embedded program algorithm is complete or the program operation is terminated by a hardware reset, the device will return to Read mode.

After the embedded program operation has begun, the user can check for completion by reading the following bits in the status register:

Status	Q7*1	Q6*1	Q5	RY/BY#*2
In progress	Q7#	Toggling	0	0
Finished	Q7	Stop toggling	0	1
Exceed time limit	Q7#	Toggling	1	0

*1: When an attempt is made to program a protected sector, the program operation will abort thus preventing any data changes in the protected sector. Q7 will output complement data and Q6 will toggle briefly (1us or less) before aborting and returning the device to Read mode.

*2: RY/BY# is an open drain output pin and should be connected to VCC through a high value pull-up resistor.

ERASING THE MEMORY ARRAY

There are two types of erase operations performed on the memory array -- Sector Erase and Chip Erase. In the Sector Erase operation, one or more selected sectors may be erased simultaneously. In the Chip Erase operation, the complete memory array is erased except for any protected sectors. More details of the protected sectors are explained in section 5.

SECTOR ERASE

The sector erase operation is used to clear data within a sector by returning all of its memory locations to the "1" state. It requires six command cycles to initiate the erase operation. The first two cycles are "unlock cycles", the third is a configuration cycle, the fourth and fifth are also "unlock cycles", and the sixth cycle is the Sector Erase command. After the sector erase command sequence has been issued, an internal 50us time-out counter is started. Until this counter reaches zero, additional sector addresses and Sector Erase commands may be issued thus allowing multiple sectors to be selected and erased simultaneously. After the 50us time-out counter has expired, no new commands will be accepted and the embedded sector erase operation will begin. Note that the 50us timer-out counter is restarted after every erase command sequence. If the user enters any command other than Sector Erase or Erase Suspend during the time-out period, the erase operation will abort and the device will return to Read mode.

After the embedded sector erase operation begins, all commands except Erase Suspend will be ignored. The only way to interrupt the operation is with an Erase Suspend command or with a hardware reset. The hardware reset will completely abort the operation and return the device to Read mode.

COMMAND OPERATIONS (cont'd)

SECTOR ERASE (cont'd)

The system can determine the status of the embedded sector erase operation by the following methods:

Status	Q7	Q6	Q5	Q3*1	Q2	RY/BY#*2
Time-out period	0	Toggling	0	0	Toggling	0
In progress	0	Toggling	0	1	Toggling	0
Finished	1	Stop toggling	0	1	1	1
Exceeded time limit	0	Toggling	1	1	Toggling	0

Note:
1. The Q3 status bit is the 50us time-out indicator. When Q3=0, the 50us time-out counter has not yet reached zero and a new Sector Erase command may be issued to specify the address of another sector to be erased. When Q3=1, the 50us time-out counter has expired and the Sector Erase operation has already begun. Erase Suspend is the only valid command that may be issued once the embedded erase operation is underway.
2. RY/BY# is open drain output pin and should be connected to VCC through a high value pull-up resistor.
3. When an attempt is made to erase only protected sector(s), the program operation will abort thus preventing any data changes in the protected sector(s). Q7 will output its complement data and Q6 will toggle briefly (100us or less) before aborting and returning the device to Read mode. If unprotected sectors are also specified, however, they will be erased normally and the protected sector(s) will remain unchanged.
4. Q2 is a localized indicator showing a specified sector is undergoing erase operation or not. Q2 toggles when user reads at addresses where the sectors are actively being erased (in erase mode) or to be erased (in erase suspend mode). When a sector has been completely erased, Q2 stops toggling at the sector even when the device is still in erase operation for remaining selected sectors. At that circumstance, Q2 will still toggle when device is read at any other sector that remains to be erased.

CHIP ERASE

The Chip Erase operation is used erase all the data within the memory array. All memory cells containing a "0" will be returned to the erased state of "1". This operation requires 6 write cycles to initiate the action. The first two cycles are "unlock" cycles, the third is a configuration cycle, the fourth and fifth are also "unlock" cycles, and the sixth cycle initiates the chip erase operation.

During the chip erase operation, no other software commands will be accepted, but if a hardware reset is received or the working voltage is too low, that chip erase will be terminated. After Chip Erase, the chip will automatically return to Read mode.

The system can determine the status of the embedded chip erase operation by the following methods:

Status	Q7	Q6	Q5	Q2	RY/BY#*1
In progress	0	Toggling	0	Toggling	0
Finished	1	Stop toggling	0	1	1
Exceed time limit	0	Toggling	1	Toggling	0

*1: RY/BY# is open drain output pin and should be connected to VCC through a high value pull-up resistor.

COMMAND OPERATIONS (cont'd)

ERASE SUSPEND/RESUME

After beginning a sector erase operation, Erase Suspend is the only valid command that may be issued. If system issues an Erase Suspend command during the 50us time-out period following a Sector Erase command, the time-out period will terminate immediately and the device will enter Erase-Suspended Read mode. If the system issues an Erase Suspend command after the sector erase operation has already begun, the device will not enter Erase-Suspended Read mode until Tready1 time has elapsed. The system can determine if the device has entered the Erase-Suspended Read mode through Q6, Q7, and RY/BY#.

After the device has entered Erase-Suspended Read mode, the system can read or program any sector(s) except those being erased by the suspended erase operation. Reading any sector being erased or programmed will return the contents of the status register. Whenever a suspend command is issued, user must issue a resume command and check Q6 toggle bit status, before issue another erase command. The system can use the status register bits shown in the following table to determine the current state of the device:

Status	Q7	Q6	Q5	Q3	Q2	RY/BY#
Erase suspend read in erase suspended sector	1	No toggle	0	N/A	toggle	1
Erase suspend read in non-erase suspended sector	Data	Data	Data	Data	Data	1
Erase suspend program in non-erase suspended sector	Q7#	Toggle	0	N/A	N/A	0

When the device has suspended erasing, user can execute the command sets except sector erase and chip erase, such as read silicon ID, sector protect verify, program, CFI query and erase resume.

SECTOR ERASE RESUME

The sector Erase Resume command is valid only when the device is in Erase-Suspended Read mode. After erase resumes, the user can issue another Ease Suspend command, but there should be a 400uS interval between Ease Resume and the next Erase Suspend command. If the user enters an infinite suspend-resume loop, or suspend-resume exceeds 1024 times, erase times will increase dramatically.

AUTOMATIC SELECT OPERATIONS

When the device is in Read mode, Erase-Suspended Read mode, or CFI mode, the user can issue the Automatic Select command shown in Table 3 (two unlock cycles followed by the Automatic Select command 90h) to enter Automatic Select mode. After entering Automatic Select mode, the user can query the Manufacturer ID, Device ID, Security Sector locked status, or Sector-Group protected status multiple times without issuing a new Automatic Select command.

While In Automatic Select mode, issuing a Reset command (F0h) will return the device to Read mode (or Ease-Suspended Read mode if Erase-Suspend was active).

Another way to enter Automatic Select mode is to use one of the bus operations shown in Table 2. BUS OPERATION_2. After the high voltage (Vhv) is removed from the A9 pin, the device will automatically return to Read mode or Erase-Suspended Read mode.

Table 2-1. BUS OPERATION

Mode Select	RE-SET#	CE#	WE#	OE#	Address	Data (I/O) Q0~Q7	Byte# Vil Data (I/O) Q8~Q15	Byte# Vih Data (I/O) Q8~Q15	WP#/ ACC
Device Reset	L	X	X	X	X	HighZ	HighZ	HighZ	L/H
Standby Mode	Vcc± 0.3V	Vcc± 0.3V	X	X	X	HighZ	HighZ	HighZ	H
Output Disable	H	L	H	H	X	HighZ	HighZ	HighZ	L/H
Read Mode	H	L	H	L	AIN	DOUT	Q8-Q14= HighZ, Q15=A1	DOUT	L/H
Write(Note1)	H	L	L	H	AIN	DIN		DIN	Note3
Accelerate Program	H	L	L	H	AIN	DIN		DIN	Vhv
Temporary Sector-Group Unprotect	Vhv	X	X	X	AIN	DIN	HighZ	DIN	Note3
Sector-Group Protect (Note2)	Vhv	L	L	H	Sector Address, A6=L,A1=H,A0=L	DIN, DOUT	X	X	L/H
Chip Unprotect (Note2)	Vhv	L	L	H	Sector Address, A6=H,A1=H,A0=L	DIN, DOUT	X	X	Note3

Notes:
1. All sectors will be unprotected if WP#/ACC=Vhv.
2. The two outmost boot sectors are protected if WP#/ACC=Vil.
3. When WP#/ACC = Vih, the protection conditions of the two outmost boot sectors depend on previous protection conditions."Sector/Sector Block Protection and Unprotection" describes the protect and unprotect method.
4. Q0~Q15 are input (DIN) or output (DOUT) pins according to the requests of command sequence, sector protection, or data polling algorithm.
5. In Word Mode (Byte#=Vih), the addresses are AM to A0.
   In Byte Mode (Byte#=Vil), the addresses are AM to A-1 (Q15).
6. AM: MSB of address.

Table 2-2. BUS OPERATION

Item	Control Input			AM to A12	A11 to A10	A9	A8 to A7	A6	A5 to A2	A1	A0	Q0~Q7	Q8~Q15
	CE#	WE#	OE#										
Sector Lock Status Verification	L	H	L	SA	x	V_{hv}	x	L	x	H	L	01h or 00h (Note1)	x
Read Silicon ID Manufacturer Code	L	H	L	x	x	V_{hv}	x	L	x	L	L	C2H	x
Read Silicon ID MX29LV128DT	L	H	L	x	x	V_{hv}	x	L	x	L	H	7EH	22H(Word)
													XXH(Byte)
Read Silicon ID MX29LV128DB	L	H	L	x	x	V_{hv}	x	L	x	L	H	7AH	22H(Word)
													XXH(Byte)
Read Indicator Bit (Q7) For Security Sector	L	H	L	x	x	V_{hv}	x	L	x	H	H	(Note2)	x

Notes:
1. Sector unprotected code:00h. Sector protected code:01h.
2. Factory locked code: WP# protects bottom two address sector: 88h.
   WP# protects top two address sector: 98h
   Factory unlocked code: WP# protects bottom two address sector: 08h.
   WP# protects top two address sector: 18h
3. AM: MSB of address.

COMMAND OPERATIONS (cont'd)

AUTOMATIC SELECT COMMAND SEQUENCE

Automatic Select mode is used to access the manufacturer ID, device ID and to verify whether or not secured silicon is locked and whether or not a sector is protected. The automatic select mode has four command cycles. The first two are unlock cycles, and followed by a specific command. The fourth cycle is a normal read cycle, and user can read at any address any number of times without entering another command sequence. The Reset command is necessary to exit the Automatic Select mode and back to read array. The following table shows the identification code with corresponding address.

		Address	Data (Hex)	Representation
Manufacturer ID	Word	X00	C2	
	Byte	X00	C2	
Device ID	Word	X01	227E/227A	Top/Bottom Boot Sector
	Byte	X02	7E/7A	Top/Bottom Boot Sector
Secured Silicon	Word	X03	98/18 (Top) 88/08 (Bottom)	Factory locked/unlocked
	Byte	X06	98/18 (Top) 88/08 (Bottom)	Factory locked/unlocked
Sector Protect Verify	Word	(Sector address) X 02	00/01	Unprotected/protected
	Byte	(Sector address) X 04	00/01	Unprotected/protected

After entering automatic select mode, no other commands are allowed except the reset command.

READ MANUFACTURER ID OR DEVICE ID

The Manufacturer ID (identification) is a unique hexadecimal number assigned to each manufacturer by the JEDEC committee. Each company has its own manufacturer ID, which is different from the ID of all other companies. The number assigned to Macronix is C2h.

The Device ID is a unique hexadecimal number assigned by the manufacturer for each one of the flash devices made by that manufacturer.

The above two ID types are stored in a 16-bit register on the flash device -- eight bits for each ID. This register is normally read by the user or by the programming machine to identify the manufacturer and the specific device.

After entering Automatic Select mode, performing a read operation with A1 & A0 held LOW will cause the device to output the Manufacturer ID on the Data I/O (Q7 to Q0) pins. Performing a read operation with A1 LOW and A0 HIGH will cause the device to output the Device ID.

SECURITY SECTOR LOCK STATUS

After entering Automatic Select mode, the customer can check the lock status of the Security Sector by performing a read operations with A0 and A1 held HIGH. If the code 98h(T)/88h(B) is read from data pins Q7 to Q0, the sector has been locked at the factory. If the code 18h(T)/08h(B) is read, the sector has not been locked at the factory.

COMMAND OPERATIONS (cont'd)

VERIFY SECTOR GROUP PROTECTION

After entering Automatic Select mode, performing a read operation with A1 held HIGH and A0 held LOW and the address of the sector to be checked applied to A20 to A12, data bit Q0 will indicate the protected status of the addressed sector. If Q0 is HIGH, the sector is protected. Conversely, if Q0 is LOW, the sector is unprotected.

SECURITY SECTOR FLASH MEMORY REGION

The Security Sector region is an extra memory space of 128-Words in length. The Security Sector can be locked by the factory prior to shipping, or it can be locked by the customer later.

Factory Locked: Security Sector Programmed and Protected at the Factory

In a factory locked device, the Security Sector is permanently locked before shipping from the factory. The device will have a 16-byte (8-word) ESN in the security region. In bottom boot devices, the ESN occupies addresses 00000h to 0000Fh in byte mode or 00000h to 00007h in word mode. In top boot devices, the ESN occupies addresses FFFF00h to FFFF0Fh in byte mode or 7FFF80h to 7FFF87h in word mode.

Customer Lockable: Security Sector NOT Programmed or Protected at the Factory

When the security feature is not required, the Security Sector can provide an extra sector of memory.

Two methods are available for protecting the Security Sector. Note that once the Security Sector is protected, there is NO way to unprotect it and its contents can no longer be altered.

The first protection method requires writing the three-cycle Enter Security Region command followed by the use of the Sector-Group protect algorithm as illustrated in Figure 14-1 with the following exception: the RESET# pin may be at either Vih or Vhv. Unlike normal Sector-Groups, which do require Vhv on the RESET# pin, the Security Sector may be permanently locked in-circuit without the use of high voltage.

The second protection method also uses the three-cycle Enter Security Region command, but uses bus operations that applies Vhv to the A9 and OE# pins with A6, CE#, and WE# held LOW and the SA address applied to A20 to A12. The protection operation begins at the falling edge of WE# and terminates at the rising edge. Contact Macronix for more details on using this method.

After the Security Sector is locked and verified, the system must write an Exit Security Sector Region command, go through a power cycle, or issue a hardware reset to return the device to read normal array mode.

ENTER AND EXIT SECURITY SECTOR

The device allows the user to access the extra 128-Words sector identified as the Security Sector, which may contain a random, 128-bits electronic serial number (ESN), or it may contain user data.

To access the Security Sector, the user must issue a three-cycle "Enter Security Sector" command sequence. To exit the Security Sector and return to normal operation, the user issues the four-cycle "Exit Security Sector" command.

COMMAND OPERATIONS (cont'd)

RESET

In the following situations, executing reset command will reset device back to Read mode:

- Among erase command sequence (before the full command set is completed)
- Sector erase time-out period
- Erase fail (while Q5 is high)
- Among program command sequence (before the full command set is completed, erase-suspended program included)
- Program fail (while Q5 is high, and erase-suspended program fail is included)
- Read silicon ID mode
- Sector protect verify
- CFI mode

While device is at the status of program fail or erase fail (Q5 is high), user must issue reset command to reset device back to read array mode. While the device is in read silicon ID mode, sector protect verify or CFI mode, user must issue reset command to reset device back to read array mode.

When the device is in the progress of programming (not program fail) or erasing (not erase fail), device will ignore reset command.

COMMON FLASH MEMORY INTERFACE (CFI) MODE

QUERY COMMAND AND COMMAND FLASH MEMORY INTERFACE (CFI) MODE

MX29LV128D T/B features CFI mode. Host system can retrieve the operating characteristics, structure and vendor-specified information such as identifying information, memory size, byte/word configuration, operating voltages and timing information of this device by CFI mode. If the system writes the CFI Query command "98h", to address "55h"/ "AAh" (depending on Word/Byte mode), the device will enter the CFI Query Mode, any time the device is ready to read array data. The system can read CFI information at the addresses given in Table 4.

Once user enters CFI query mode, user can not issue any other commands except reset command. The reset command is required to exit CFI mode and go back to the mode before entering CFI. The system can write the CFI Query command only when the device is in read mode, erase suspend, standby mode or automatic select mode.

Table 4-1. CFI mode: Identification Data Values
(All values in these tables are in hexadecimal)

Description	Address (h) (Word Mode)	Address (h) (Byte Mode)	Data (h)
Query-unique ASCII string "QRY"	10	20	0051
	11	22	0052
	12	24	0059
Primary vendor command set and control interface ID code	13	26	0002
	14	28	0000
Address for primary algorithm extended query table	15	2A	0040
	16	2C	0000
Alternate vendor command set and control interface ID code	17	2E	0000
	18	30	0000
Address for alternate algorithm extended query table	19	32	0000
	1A	34	0000

Table 4-2. CFI mode: System Interface Data Values

Description	Address (h) (Word Mode)	Address (h) (Byte Mode)	Data (h)
Vcc supply minimum program/erase voltage	1B	36	0030
Vcc supply maximum program/erase voltage	1C	38	0036
VPP supply minimum program/erase voltage	1D	3A	0000
VPP supply maximum program/erase voltage	1E	3C	0000
Typical timeout per single word/byte write, 2^n us	1F	3E	0004
Typical timeout for maximum-size buffer write, 2^n us	20	40	0000
Typical timeout per individual block erase, 2^n ms	21	42	000A
Typical timeout for full chip erase, 2^n ms	22	44	0000
Maximum timeout for word/byte write, 2^n times typical	23	46	0005
Maximum timeout for buffer write, 2^n times typical	24	48	0000
Maximum timeout per individual block erase, 2^n times typical	25	4A	0004
Maximum timeout for chip erase, 2^n times typical	26	4C	0000

Table 4-3. CFI mode: Device Geometry Data Values

Description	Address (h) (Word Mode)	Address (h) (Byte Mode)	Data (h)
Device size = 2^n in number of bytes	27	4E	0018
Flash device interface description (02=asynchronous x8/x16)	28	50	0002
	29	52	0000
Maximum number of bytes in buffer write = 2^n (not support)	2A	54	0000
	2B	56	0000
Number of erase regions within device	2C	58	0002
Index for Erase Bank Area 1	2D	5A	0007
[2E,2D] = # of same-size sectors in region 1-1	2E	5C	0000
[30, 2F] = sector size in multiples of 256-bytes	2F	5E	0020
	30	60	0000
Index for Erase Bank Area 2	31	62	00FE
	32	64	0000
	33	66	0000
	34	68	0001
Index for Erase Bank Area 3	35	6A	0000
	36	6C	0000
	37	6E	0000
	38	70	0000
Index for Erase Bank Area 4	39	72	0000
	3A	74	0000
	3B	76	0000
	3C	78	0000

Table 4-4. CFI mode: Primary Vendor-Specific Extended Query Data Values

Description	Address (h) (Word Mode)	Address (h) (Byte Mode)	Data (h)
Query - Primary extended table, unique ASCII string, PRI	40	80	0050
	41	82	0052
	42	84	0049
Major version number, ASCII	43	86	0031
Minor version number, ASCII	44	88	0033
Unlock recognizes address (0= recognize, 1= don't recognize)	45	8A	0000
Erase suspend (2= to both read and program)	46	8C	0002
Sector protect (N= # of sectors/group)	47	8E	0004
Temporary sector unprotect (1=supported)	48	90	0001
Sector protect/Chip unprotect scheme	49	92	0004
Simultaneous R/W operation (0=not supported)	4A	94	0000
Burst mode (0=not supported)	4B	96	0000
Page mode (0=not supported)	4C	98	0000
Minimum ACC(acceleration) supply (0= not supported), [D7:D4] for volt, [D3:D0] for 100mV	4D	9A	00A5
Maximum ACC(acceleration) supply (0= not supported), [D7:D4] for volt, [D3:D0] for 100mV	4E	9C	00B5
Top/Bottom boot block indicator 02h=bottom boot device 03h=top boot device	4F	9E	0002/ 0003

ELECTRICAL CHARACTERISTICS

ABSOLUTE MAXIMUM STRESS RATINGS

Surrounding Temperature with Bias . . . . . -65°C to +125°C
Storage Temperature . . . . . -65°C to +150°C
Voltage Range
Vcc . . . . . -0.5 V to +4.0 V
RESET#, A9 and OE# . . . . . -0.5 V to +10.5 V
The other pins. . . . . -0.5 V to Vcc +0.5 V
Output Short Circuit Current (less than one second) . . . . . 200 mA

Note:
1. Minimum voltage may undershoot to -2V during transition and for less than 20ns during transitions.
2. Maximum voltage may overshoot to Vcc+2V during transition and for less than 20ns during transitions.

OPERATING TEMPERATURE AND VOLTAGE

Commercial (C) Grade
Surrounding Temperature (T_A). . . . . 0° C to +70° C
Industrial (I) Grade
Surrounding Temperature (T_A). . . . . -40° C to +85° C
V_{CC} Supply Voltages
V_{CC} range. . . . . +3.0 V to 3.6 V

DC CHARACTERISTICS

Symbol	Description	Min	Typ	Max	Remark
Iilk	Input Leak			±1.0uA	
Iilk9	A9 Leak			35uA	A9=10.5V
Iolk	Output Leak			±1.0uA	
Icr1	Read Current		5mA	15mA	CE#=Vil, OE#=Vih, Vcc=Vccmax; f=1MHz, Byte Mode
			20mA	40mA	CE#=Vil, OE#=Vih, Vcc=Vccmax; f=5MHz, Word Mode
			35mA	70mA	CE#=Vil, OE#=Vih, Vcc=Vccmax; f=10MHz
Icw	Write Current		26mA	30mA	CE#=Vil, OE#=Vih, WE#=Vil
Isb	Standby Current		8uA	20uA	Vcc=Vcc max, other pin disable
Isbr	Reset Current		8uA	20uA	Vcc=Vccmax, Reset# enable, other pin disable
Isbs	Sleep Mode Current		8uA	20uA	
Icp1	Accelerated Pgm Current, WP#/Acc pin(Word/Byte)		5mA	10mA	CE#=Vil, OE#=Vih
Icp2	Accelerated Pgm Current, Vcc pin,(Word/Byte)		15mA	30mA	CE#=Vil, OE#=Vih
Vil	Input Low Voltage	-0.5V		0.8V	
Vih	Input High Voltage	0.7xVcc		Vcc+0.3V	
Vhv	Very High Voltage for hardware Protect/Unprotect/Auto Select/ Temporary Unprotect/ Accelerated Program	9.5V		10.5V	
Vol	Output Low Voltage			0.45V	Iol=4.0mA
Voh1	Ouput High Voltage	0.85xVcc			Ioh1=-2mA
Voh2	Ouput High Voltage	Vcc-0.4V			Ioh2=-100uA
Vlko	Low Vcc Lock-out voltage	2.3V		2.5V	

SWITCHING TEST CIRCUITS

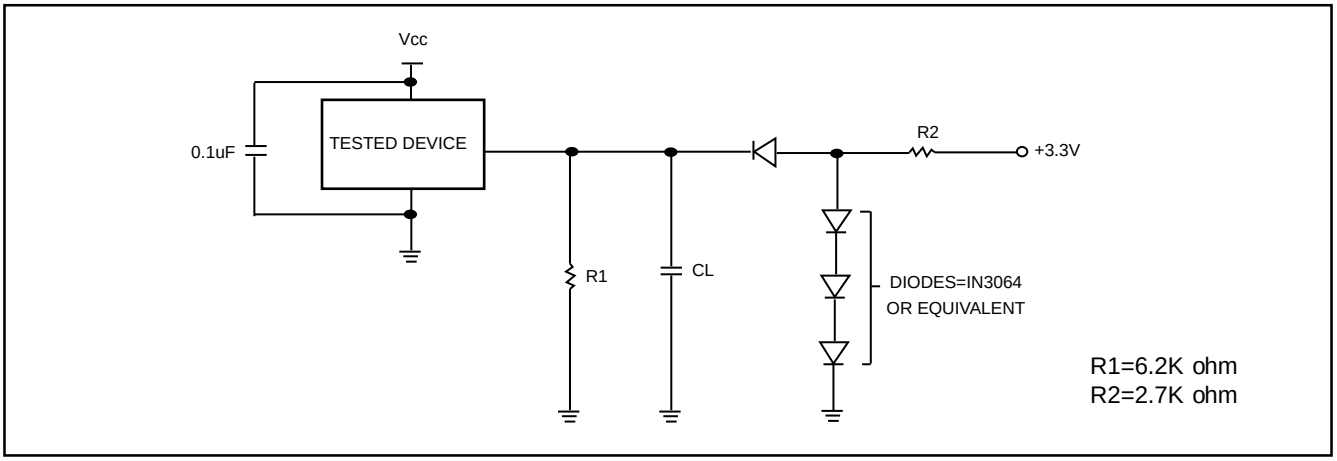

Test Condition
Output Load : 1 TTL gate
Output Load Capacitance,CL : 30pF
Rise/Fall Times : 5ns
In/Out reference levels :1.5V

SWITCHING TEST WAVEFORMS

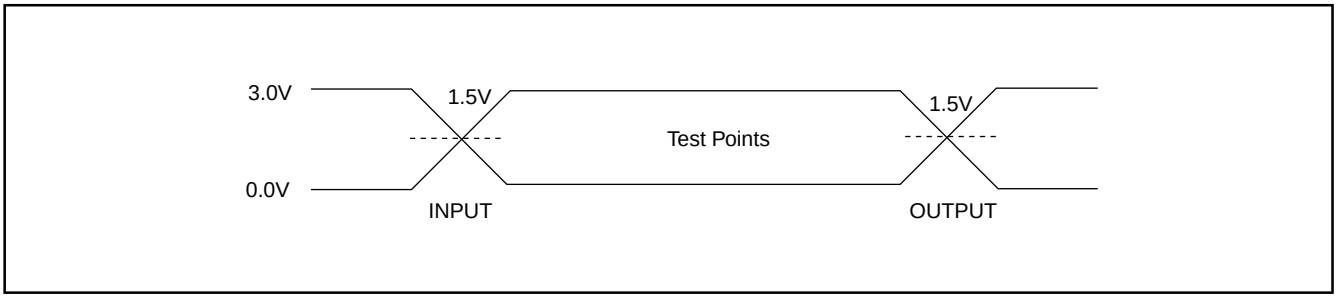

AC CHARACTERISTICS

Symbol	Description		Min	Typ	Max	Unit
Taa	Valid data output after address				90	ns
Tce	Valid data output after CE# low				90	ns
Toe	Valid data output after OE# low				30	ns
Tdf	Data output floating after OE# high				30	ns
Toh	Output hold time from the earliest rising edge of address, CE#, OE#		0			ns
Trc	Read period time		90			ns
Twc	Write period time		90			ns
Tcwc	Command write period time		90			ns
Tas	Address setup time		0			ns
Tah	Address hold time		45			ns
Tds	Data setup time		45			ns
Tdh	Data hold time		0			ns
Tvcs	Vcc setup time		50			us
Tcs	Chip enable Setup time		0			ns
Tch	Chip enable hold time		0			ns
Toes	Output enable setup time		0			ns
Toeh	Output enable hold time	Read	0			ns
Toeh		Toggle & Data# Polling	10			ns
Tws	WE# setup time		0			ns
Twh	WE# hold time		0			ns
Tcep	CE# pulse width		45			ns
Tceph	CE# pulse width high		30			ns
Twp	WE# pulse width		35			ns
Twph	WE# pulse width high		30			ns
Tbusy	Program/Erase active time by RY/BY#				90	ns
Tghwl	Read recover time before write		0			ns
Tghel	Read recover time before write		0			ns
Twhwh1	Program operation	Byte		9		us
Twhwh1	Program operation	Word		11		us
Twhwh1	Acc program operation(Word/Byte)			9	210	us
Twhwh2	Sector erase operation			1	5	sec
Tbal	Sector add hold time				50	us

Figure 1. COMMAND WRITE OPERATION

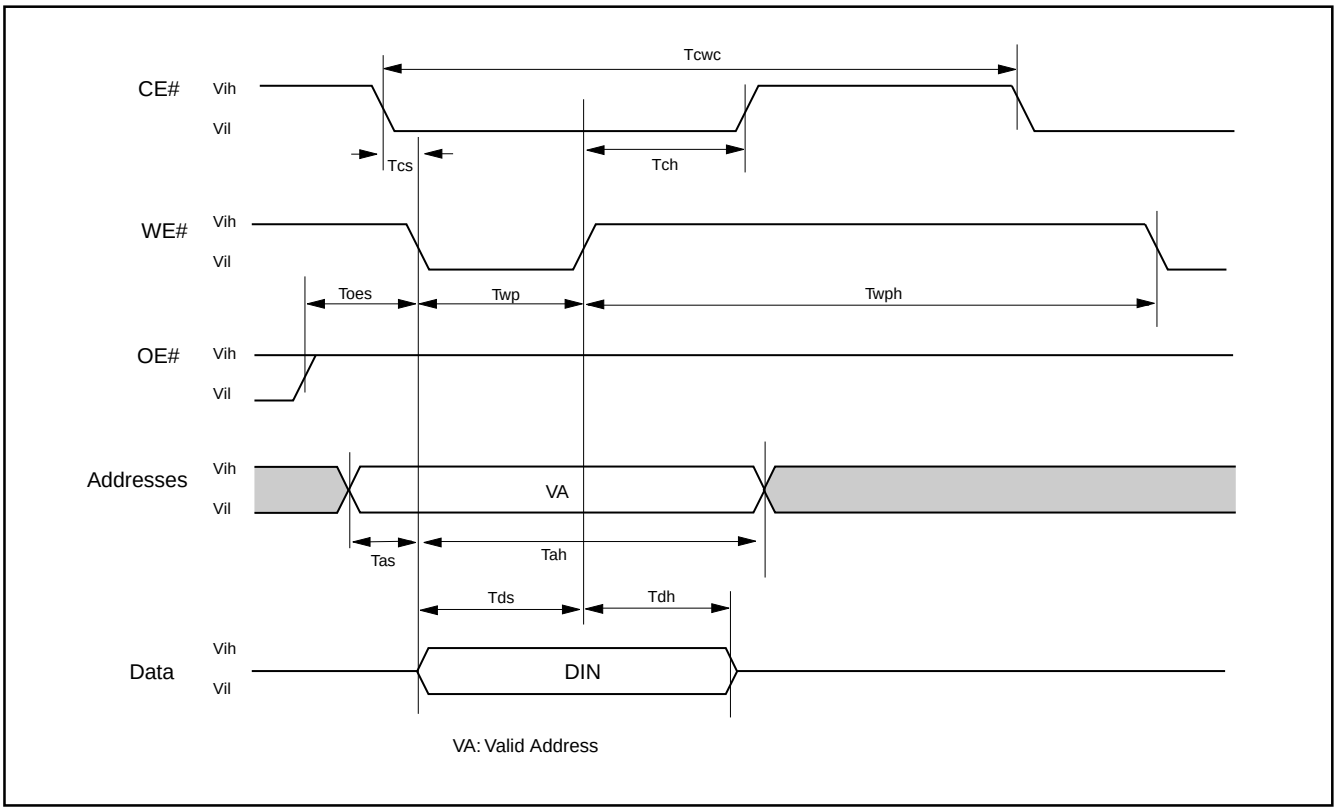

READ/RESET OPERATION

Figure 2. READ TIMING WAVEFORMS

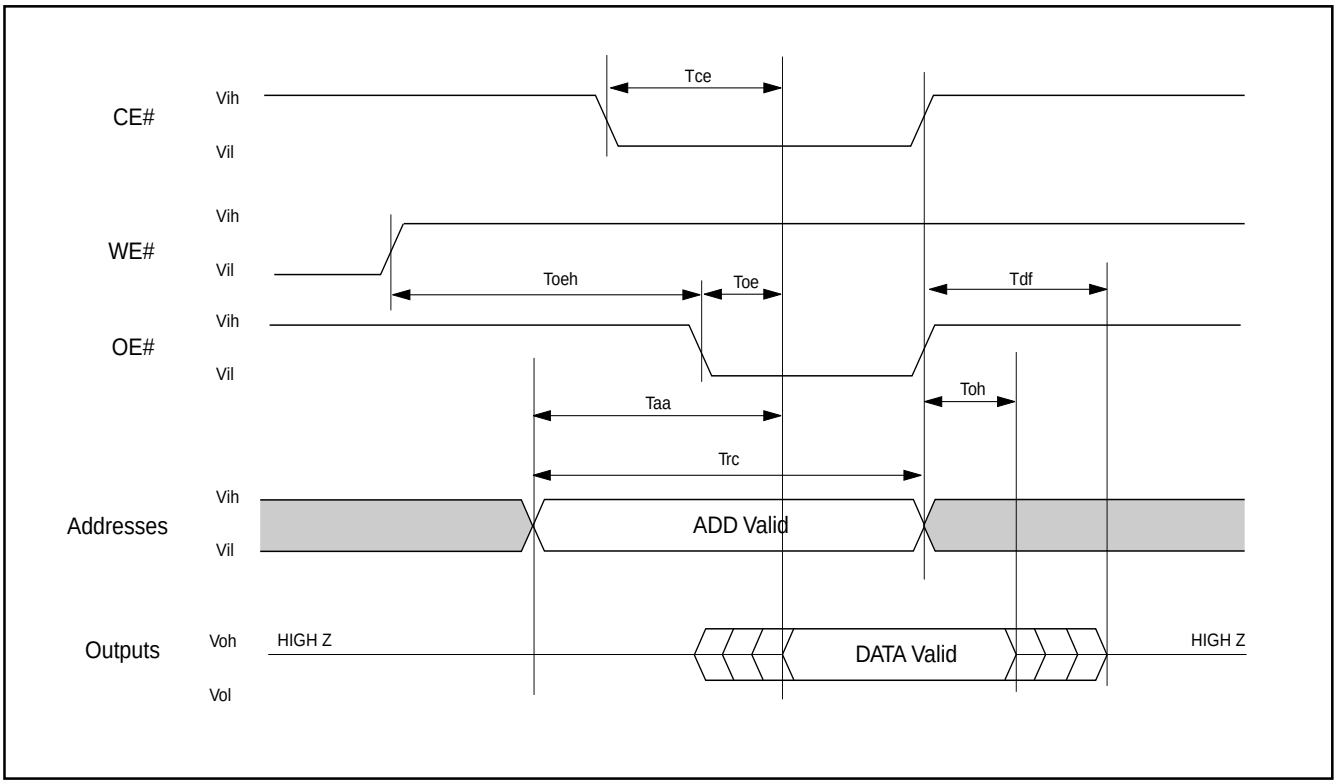

AC CHARACTERISTICS

Item	Description	Setup	Speed	Unit
Trp1	RESET# Pulse Width (During Automatic Algorithms)	MIN	10	us
Trp2	RESET# Pulse Width (NOT During Automatic Algorithms)	MIN	500	ns
Trh	RESET# High Time Before Read	MIN	50	ns
Trb1	RY/BY# Recovery Time (to CE#, OE# go low)	MIN	0	ns
Trb2	RY/BY# Recovery Time (to WE# go low)	MIN	50	ns
Tready1	RESET# PIN Low (During Automatic Algorithms) to Read or Write	MAX	20	us
Tready2	RESET# PIN Low (NOT During Automatic Algorithms) to Read or Write	MAX	500	ns

Figure 3. RESET# TIMING WAVEFORM

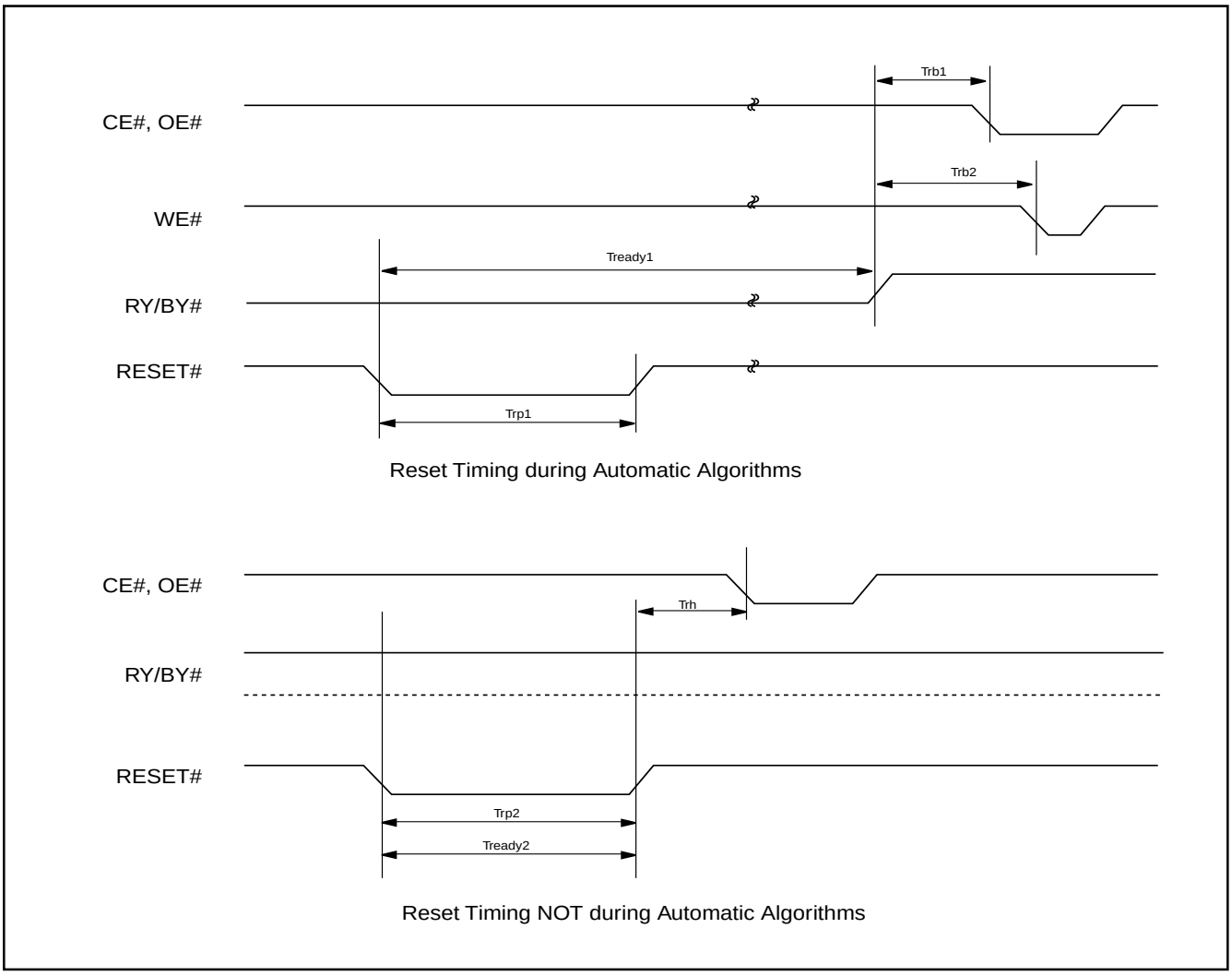

ERASE/PROGRAM OPERATION

Figure 4. AUTOMATIC CHIP ERASE TIMING WAVEFORM

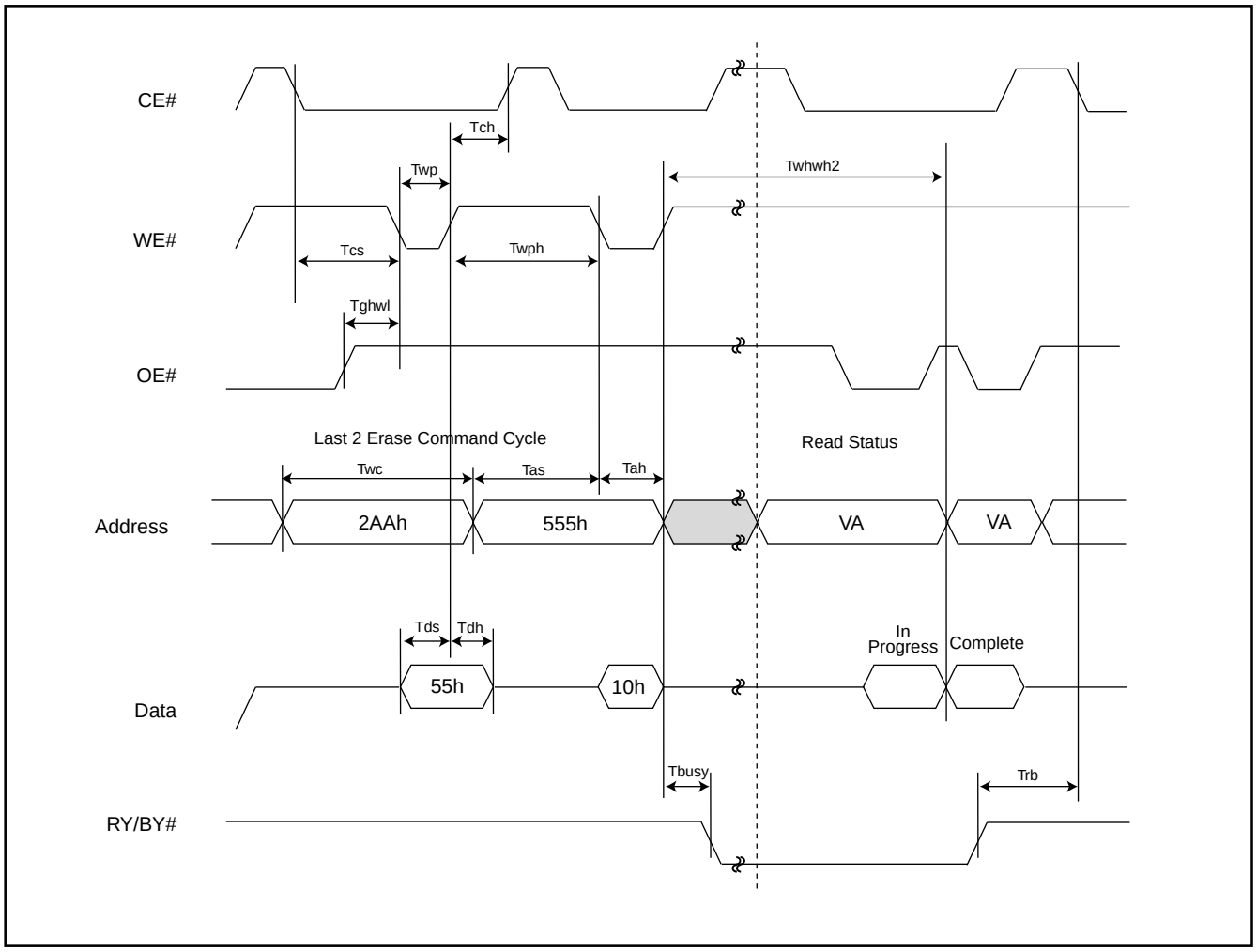

Figure 5. AUTOMATIC CHIP ERASE ALGORITHM FLOWCHART

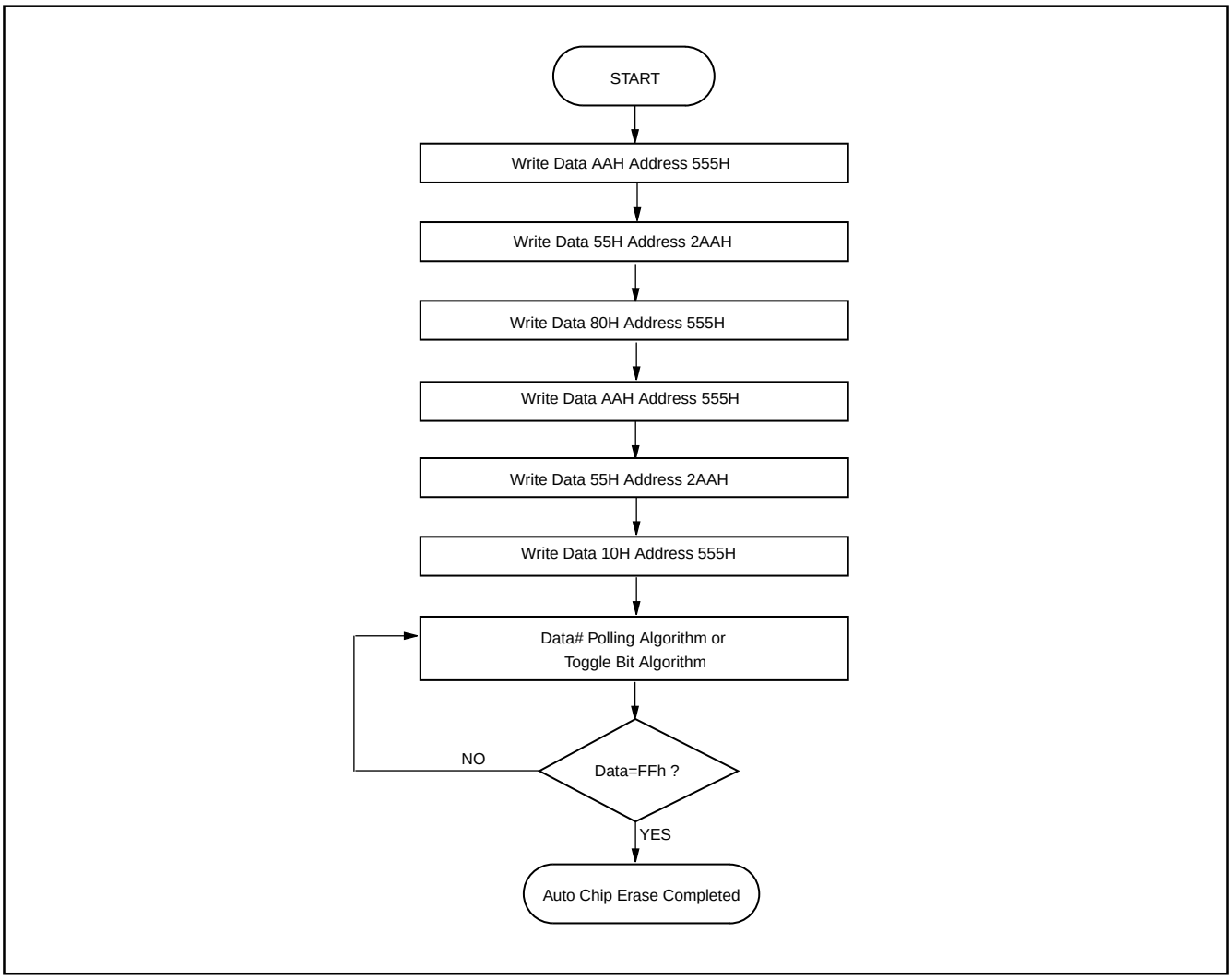

Figure 6. AUTOMATIC SECTOR ERASE TIMING WAVEFORM

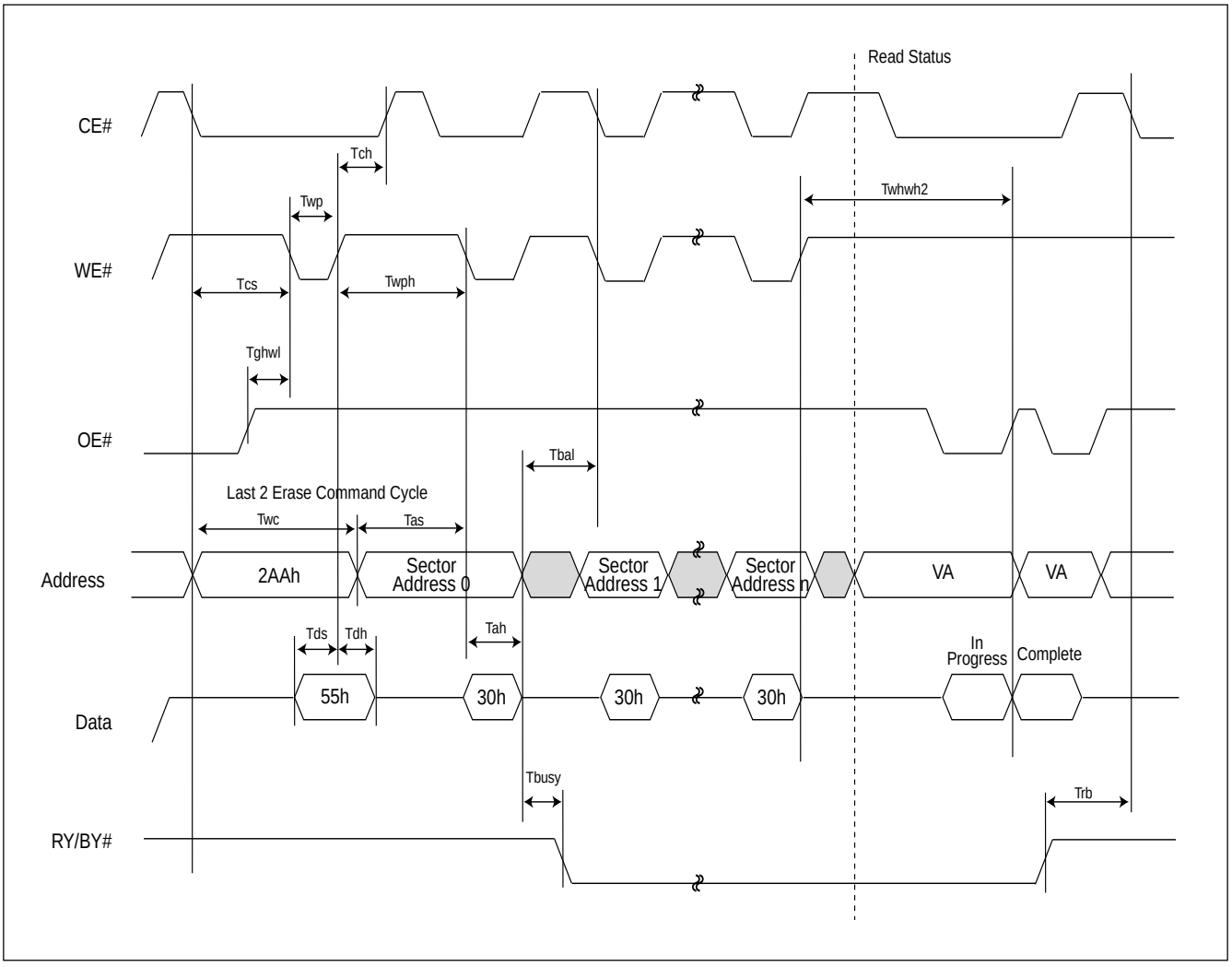

Figure 7. AUTOMATIC SECTOR ERASE ALGORITHM FLOWCHART

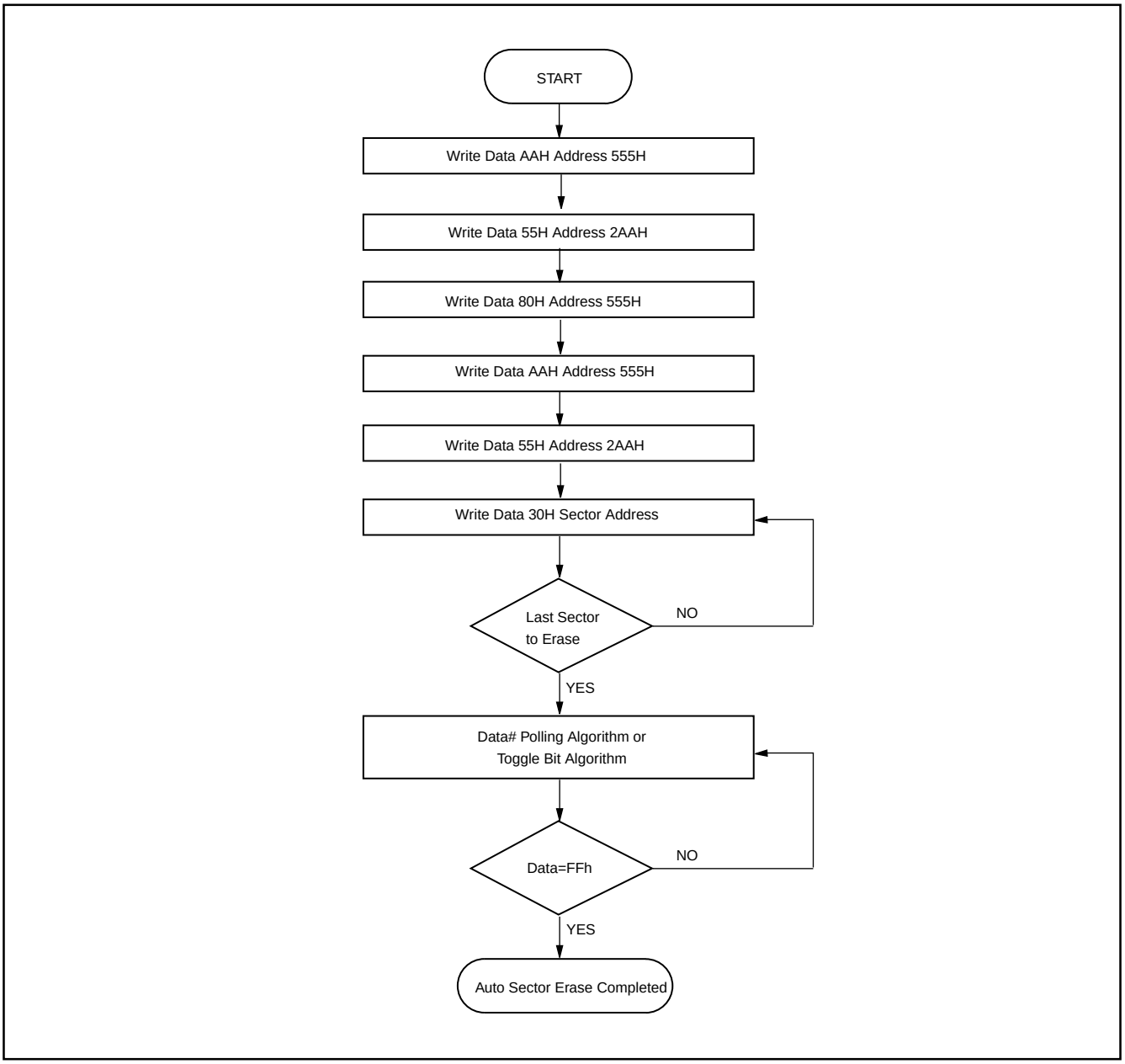

Figure 8. ERASE SUSPEND/RESUME FLOWCHART

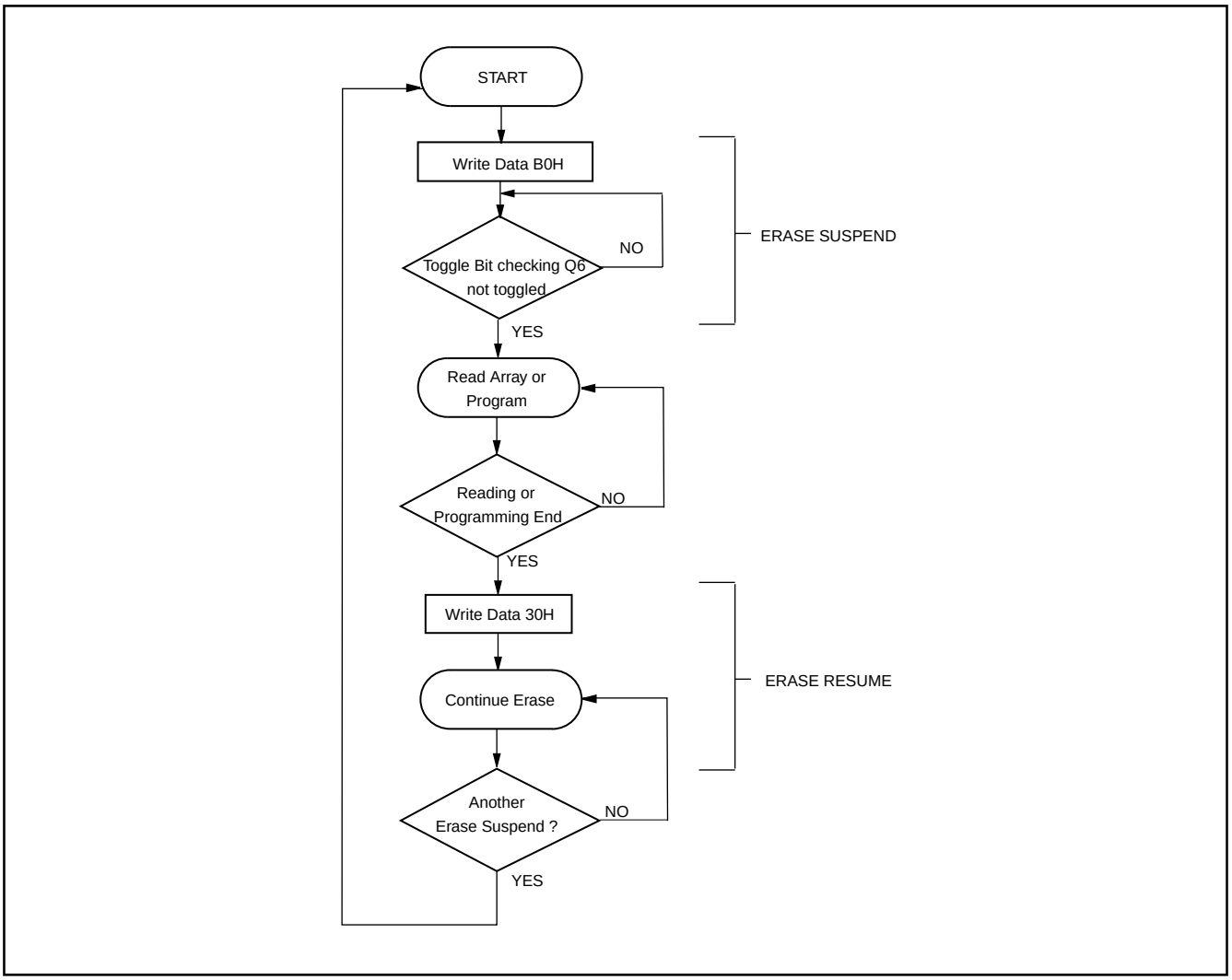

Figure 9. AUTOMATIC PROGRAM TIMING WAVEFORMS

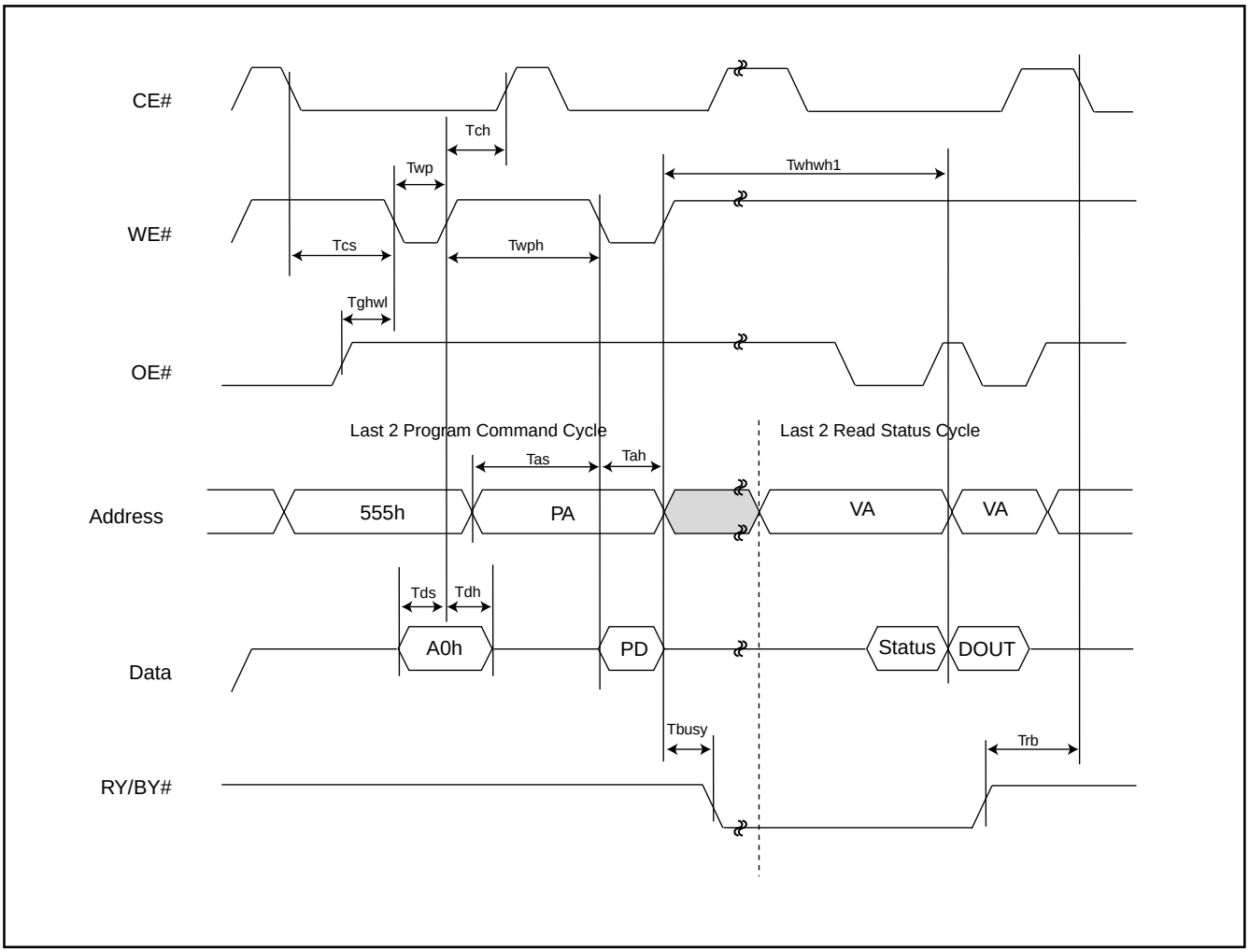

Figure 10. Accelerated Program Timing Diagram

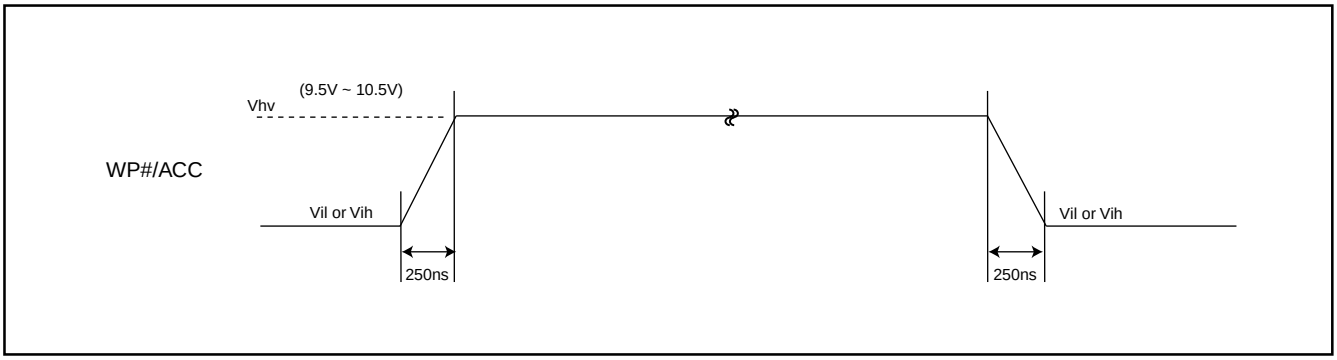

Figure 11. CE# CONTROLLED WRITE TIMING WAVEFORM

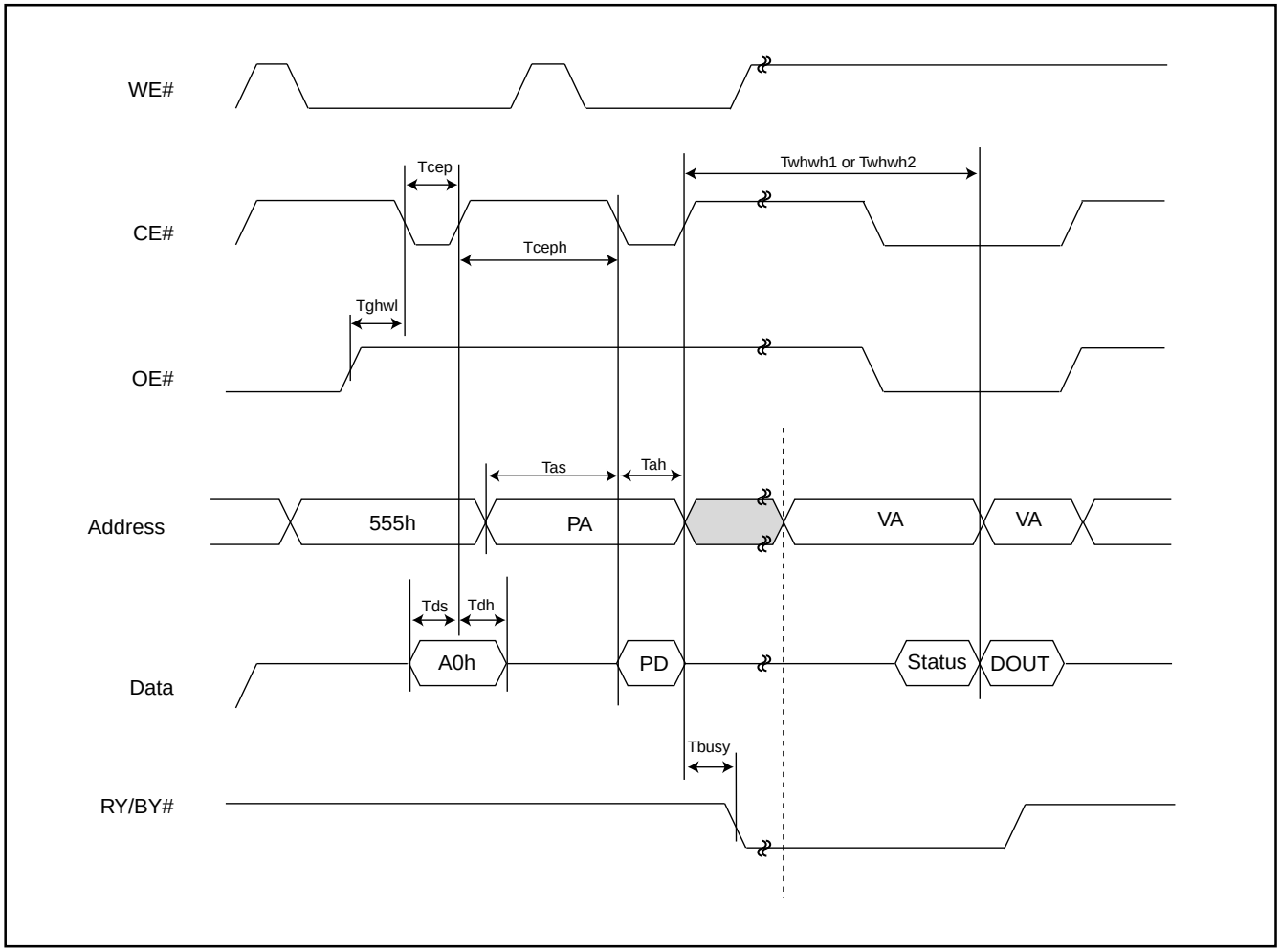

Figure 12. AUTOMATIC PROGRAMMING ALGORITHM FLOWCHART

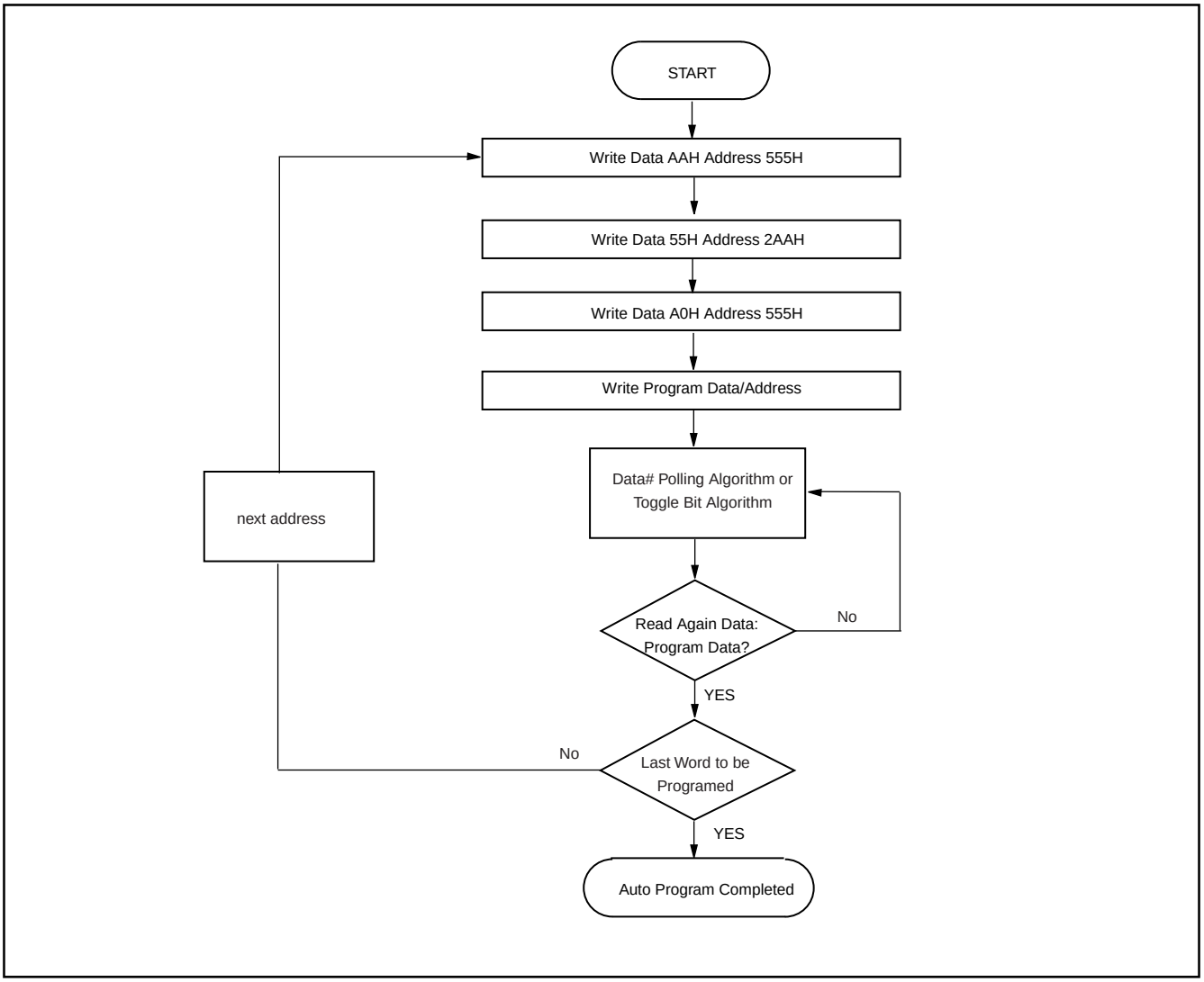

SECTOR GROUP PROTECT/CHIP UNPROTECT

Figure 13. SECTOR GROUP PROTECT/CHIP UNPROTECT WAVEFORM (RESET# Control)

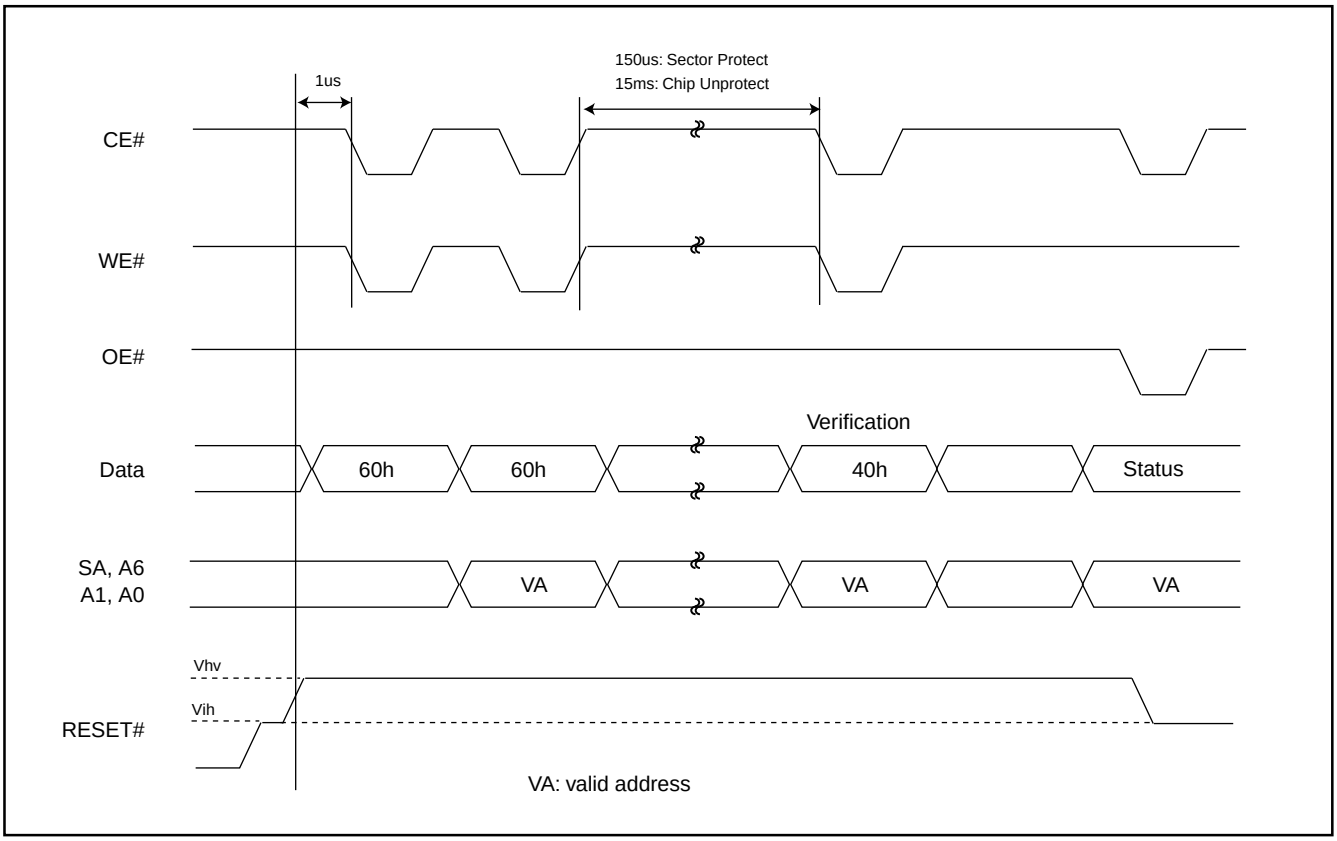

Figure 14-1. IN-SYSTEM SECTOR GROUP PROTECT WITH RESET#=Vhv

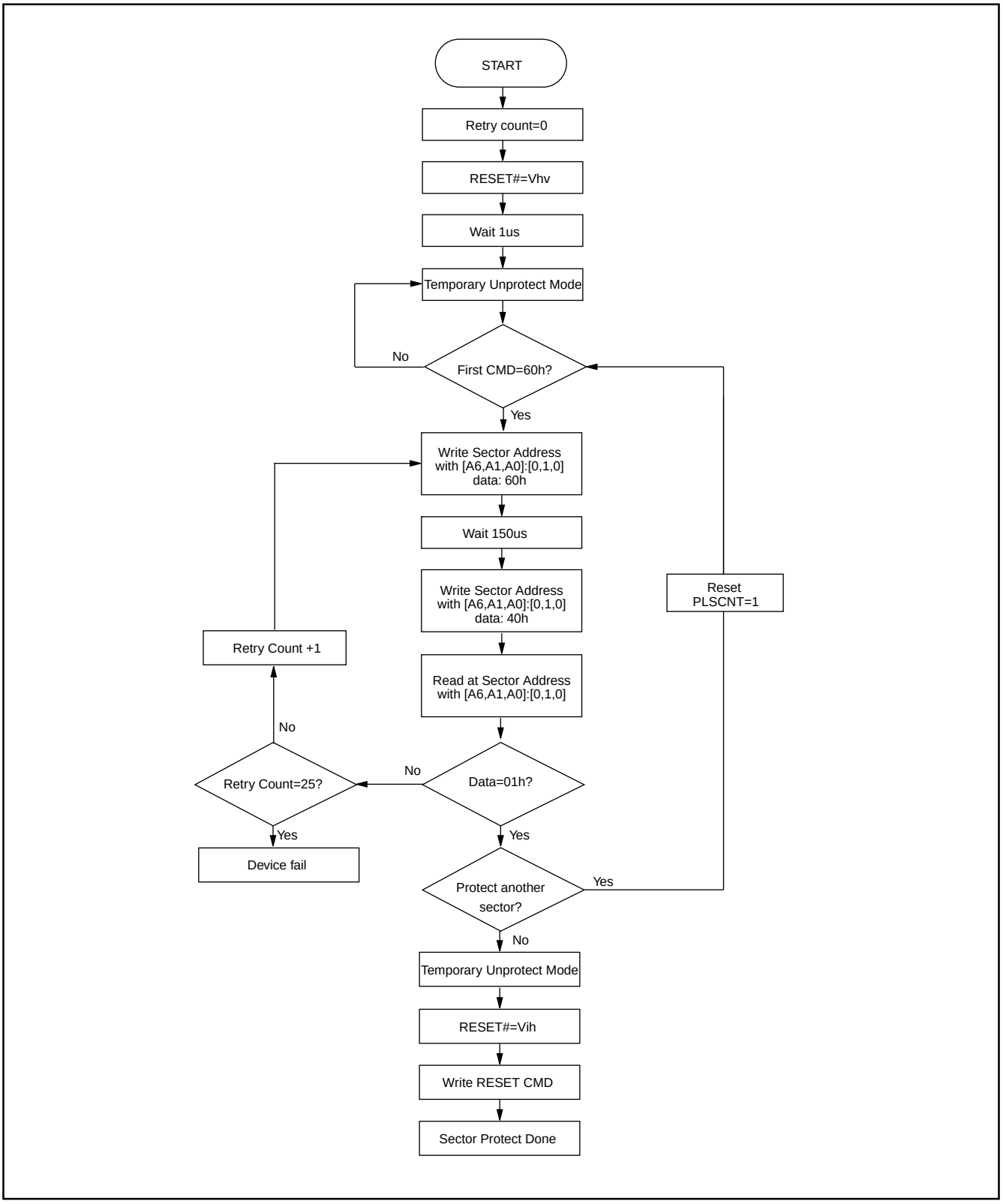

Figure 14-2. CHIP UNPROTECT ALGORITHMS WITH RESET#=Vhv

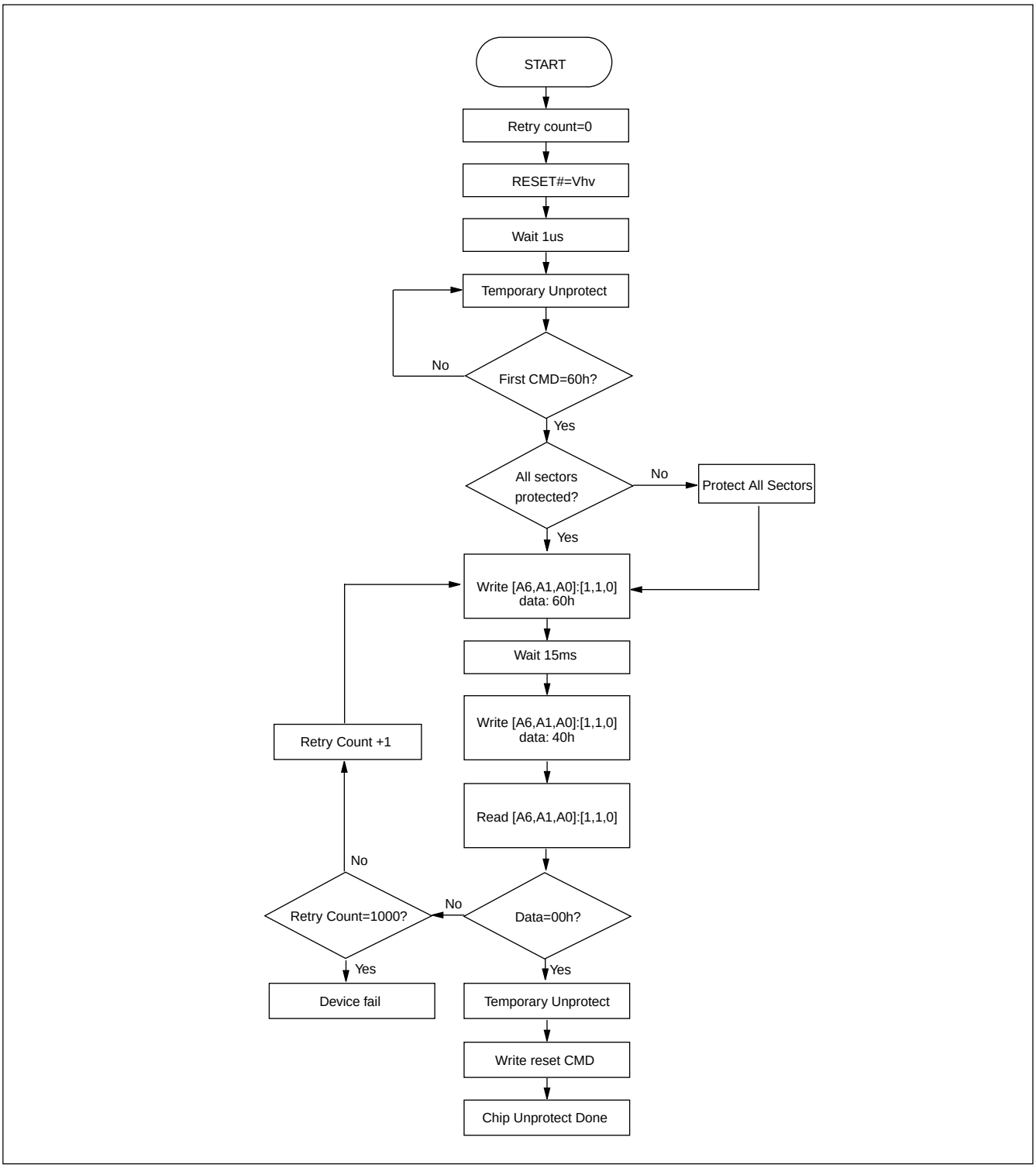

Table 5. TEMPORARY SECTOR GROUP UNPROTECT

Parameter	Alt	Description	Condition	Speed	Unit
Trpvhh	Tvidr	RESET# Rise Time to Vhv and Vhv Fall Time to RESET#	MIN	500	ns
Tvhhwl	Trsp	RESET# Vhv to WE# Low	MIN	4	us

Figure 15. TEMPORARY SECTOR GROUP UNPROTECT WAVEFORMS

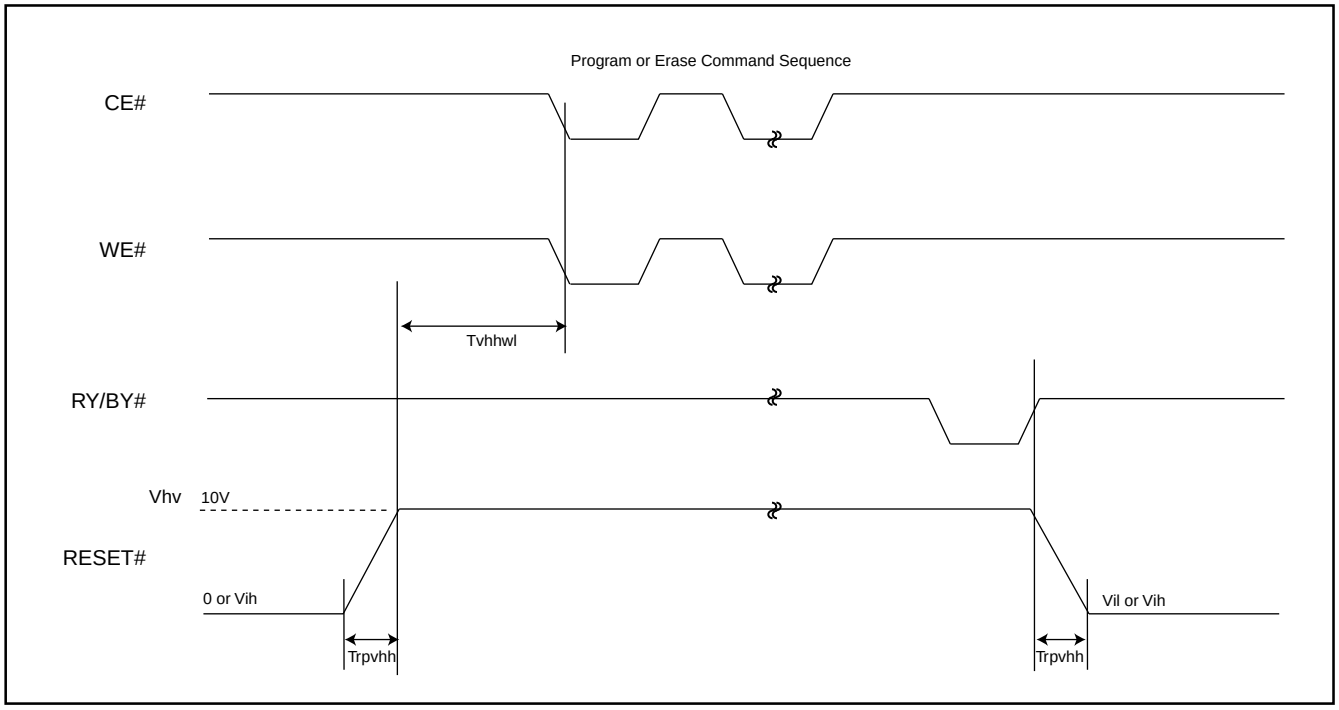

Figure 16. TEMPORARY SECTOR GROUP UNPROTECT FLOWCHART

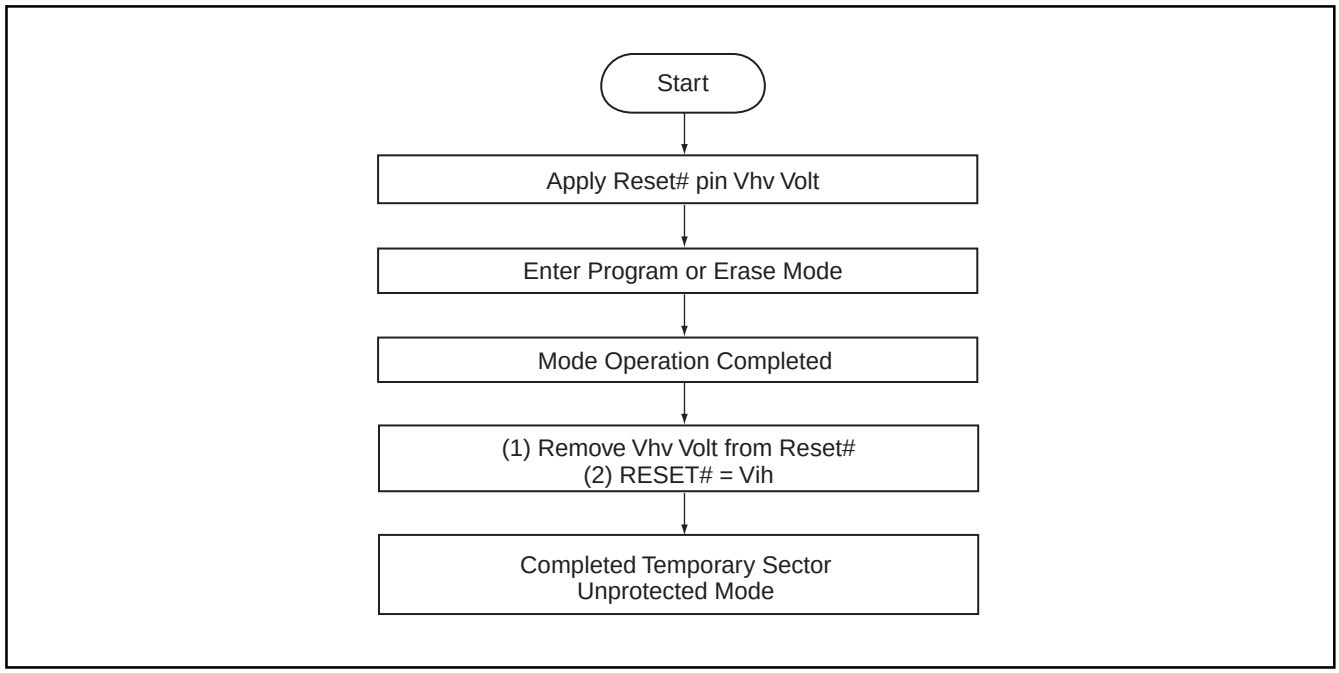

Notes:
1. Temporary unprotect all protected sectors Vhv=9.5~10.5V.
2. After leaving temporary unprotect mode, the previously protected sectors are again protected.

Figure 17. SILICON ID READ TIMING WAVEFORM

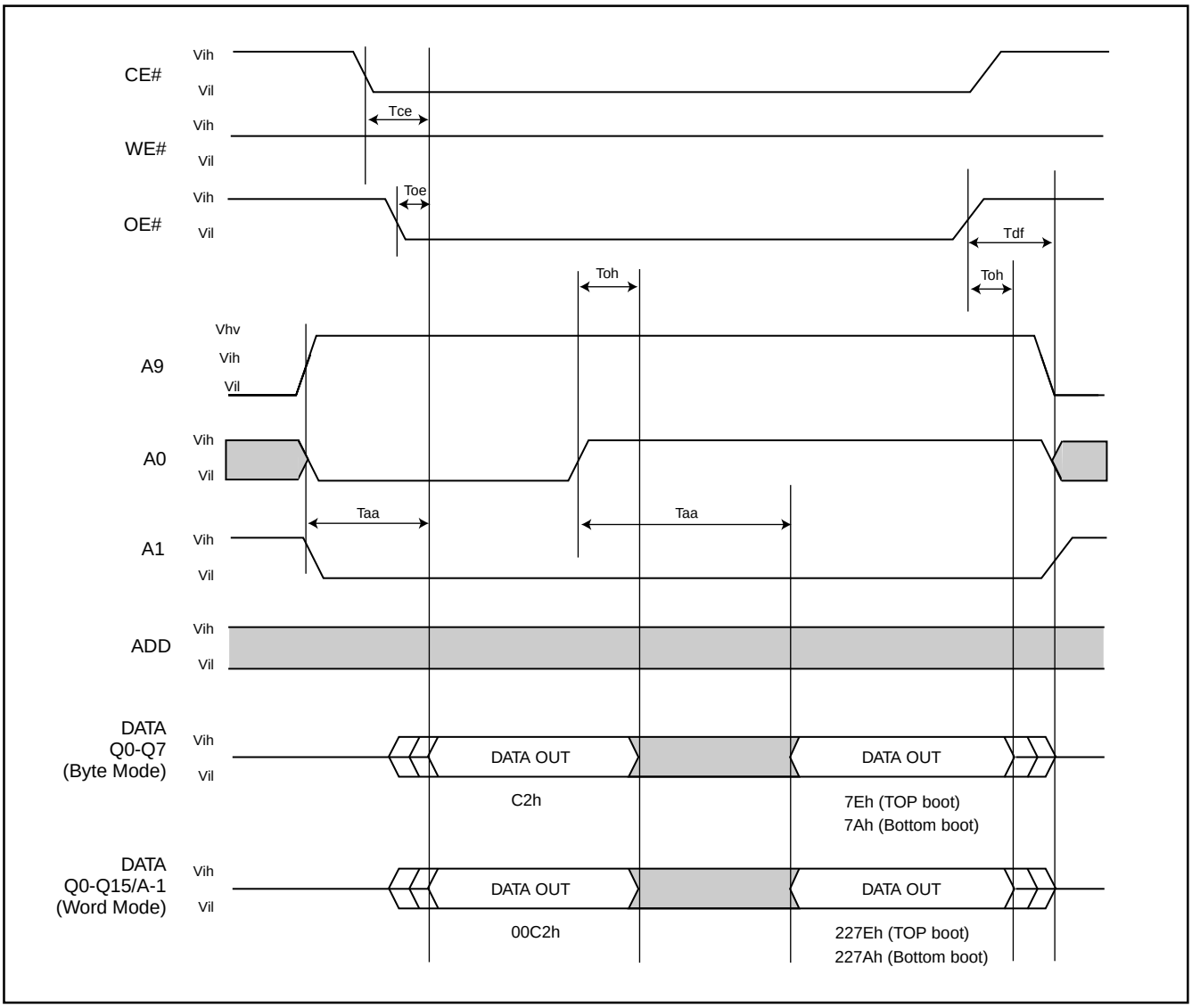

WRITE OPERATION STATUS

Figure 18. DATA# POLLING TIMING WAVEFORMS (DURING AUTOMATIC ALGORITHMS)

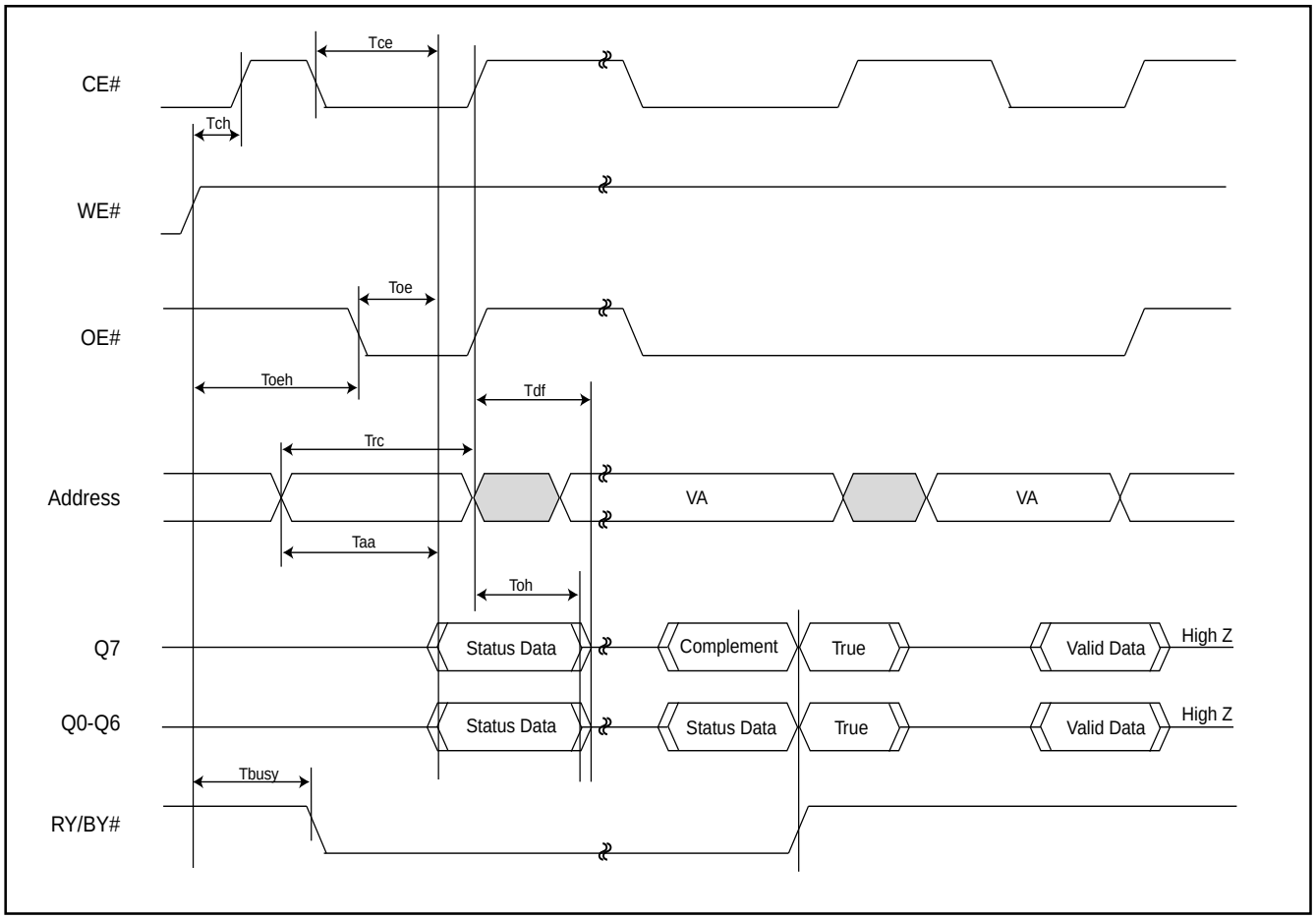

Figure 19. DATA# POLLING ALGORITHM

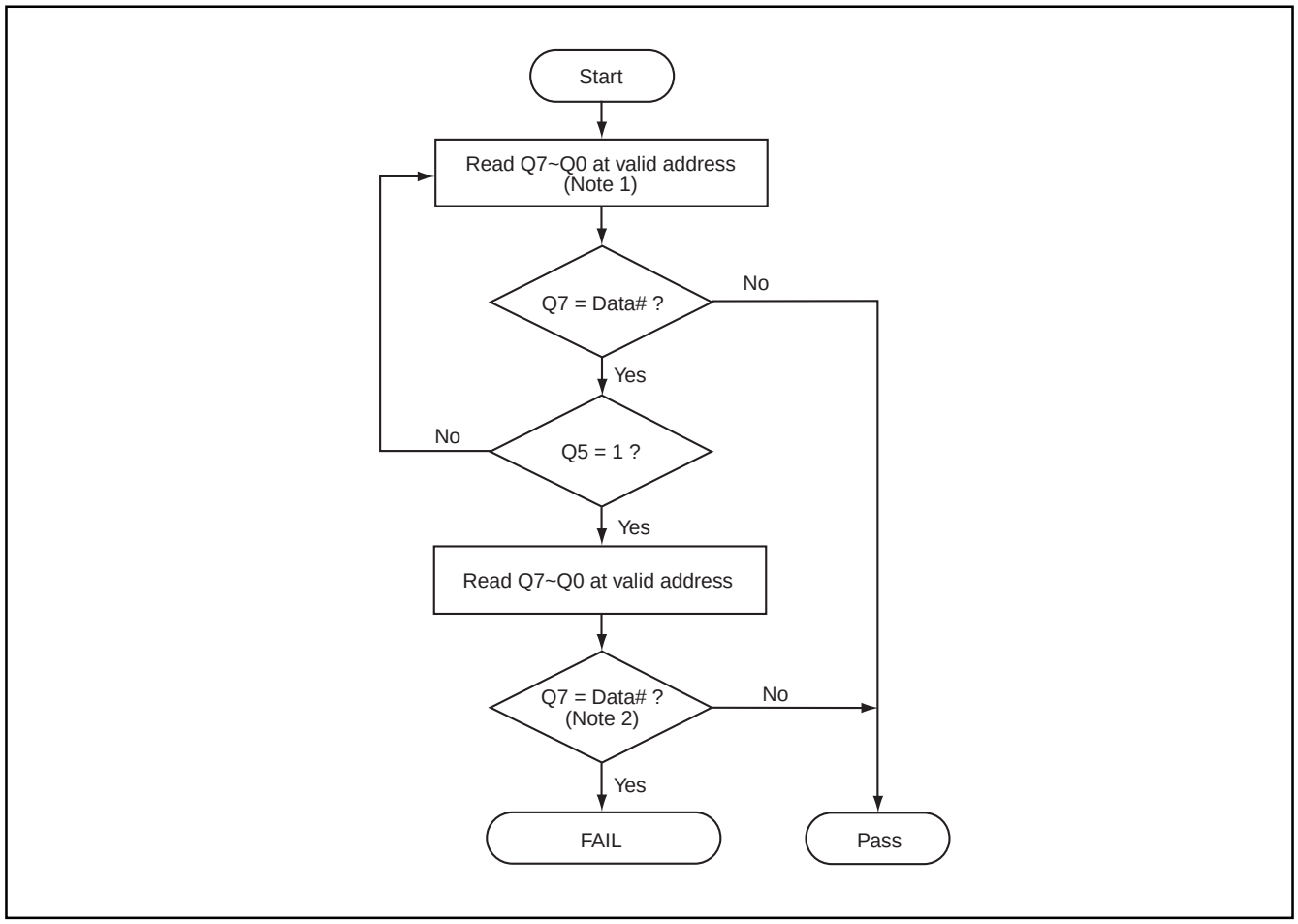

Notes:
1. For programming, valid address means program address.
   For erasing, valid address means erase sectors address.
2. Q7 should be rechecked even Q5="1" because Q7 may change simultaneously with Q5.

Figure 20. TOGGLE BIT TIMING WAVEFORMS (DURING AUTOMATIC ALGORITHMS)

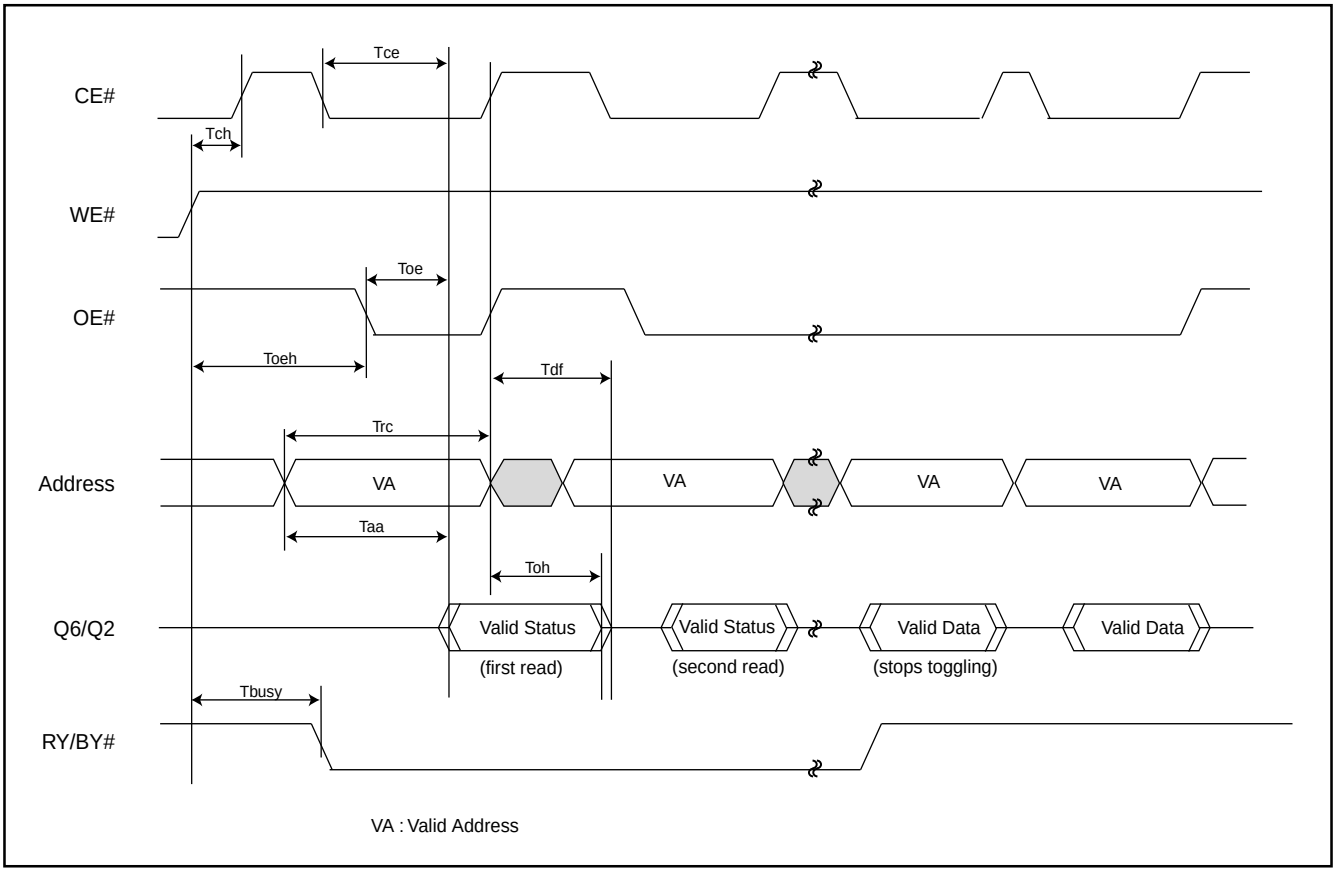

Figure 21. TOGGLE BIT ALGORITHM

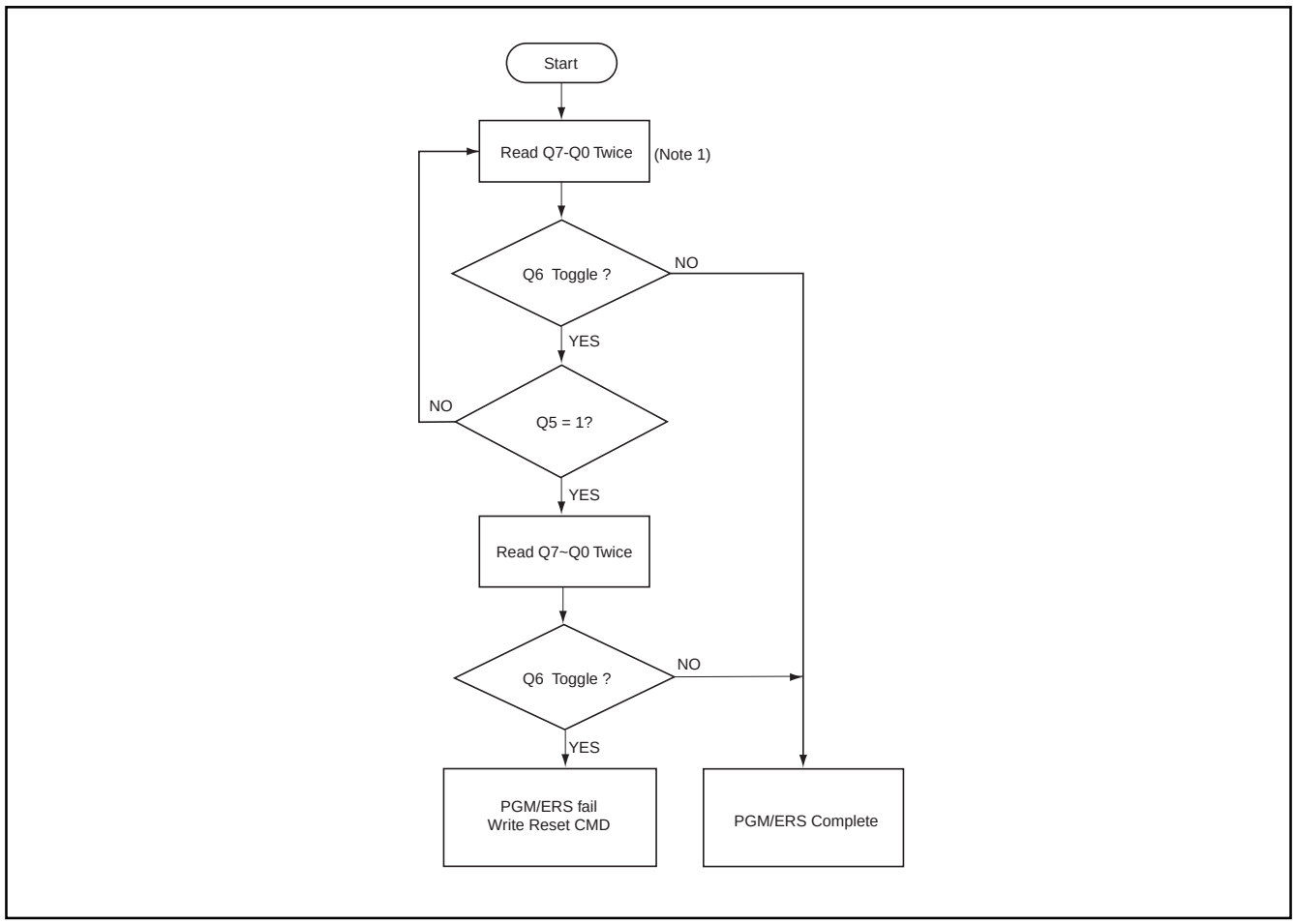

Notes:
1. Read toggle bit twice to determine whether or not it is toggling.
2. Recheck toggle bit because it may stop toggling as Q5 changes to "1".

AC CHARACTERISTICS

WORD/BYTE CONFIGURATION (BYTE#)

Parameter	Description		Speed	Unit
			90	
Telfl/Telfh	CE# to BYTE# from L/H	MAX	5	ns
Tflqz	BYTE# from L to Output Hiz	MAX	30	ns
Tfhqv	BYTE# from H to Output Active	MIN	90	ns

Figure 22. BYTE# TIMING WAVEFORM FOR READ OPERATIONS (BYTE# switching from byte mode to word mode)

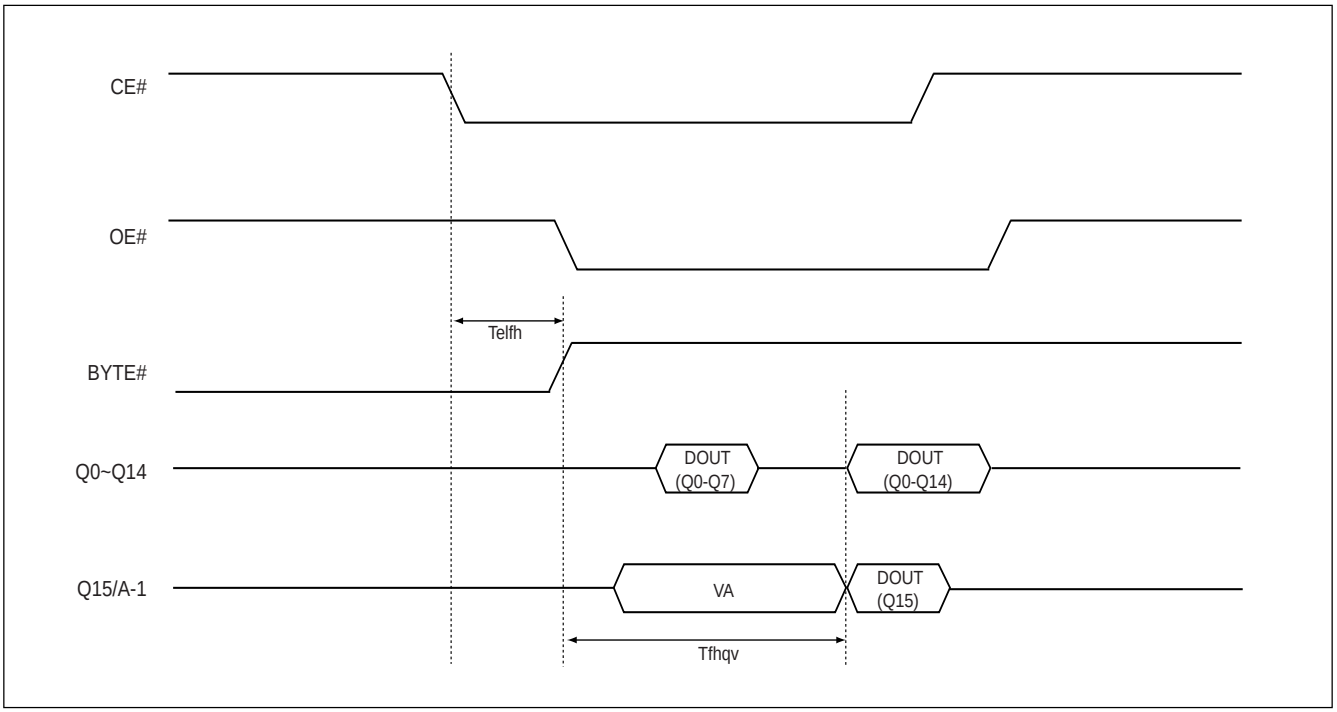

RECOMMENDED OPERATING CONDITIONS

At Device Power-Up

AC timing illustrated in Figure A is recommended for the supply voltages and the control signals at device power-up. If the timing in the figure is ignored, the device may not operate correctly.

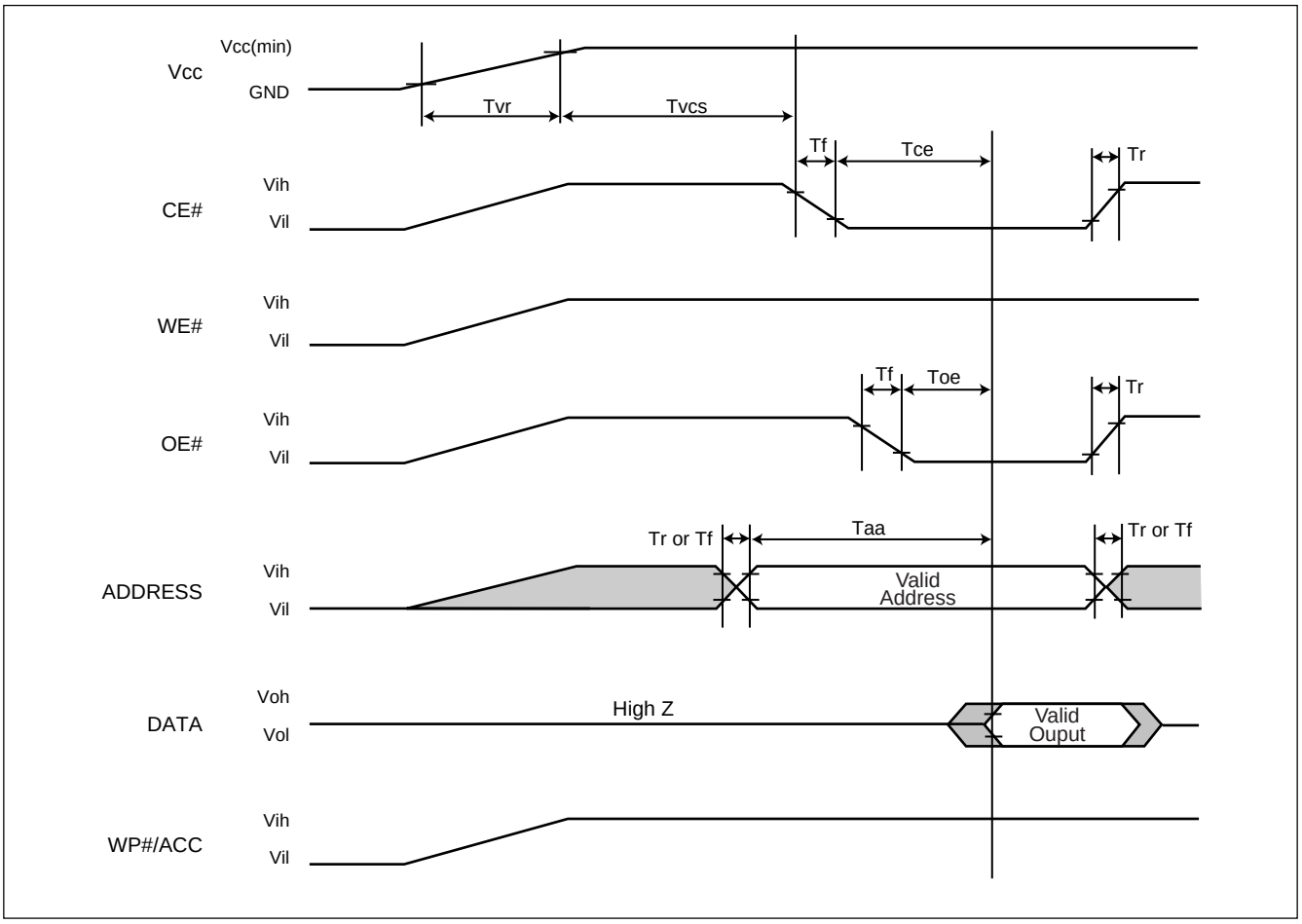

Figure A. AC Timing at Device Power-Up

Symbol	Parameter	Min.	Max.	Unit
Tvr	Vcc Rise Time	20	500000	us/V
Tr	Input Signal Rise Time		20	us/V
Tf	Input Signal Fall Time		20	us/V
Tvcs	Vcc Setup Time	200		us

ERASE AND PROGRAMMING PERFORMANCE

PARAMETER	LIMITS			UNITS
	MIN.	TYP. (1)	MAX. (2)	
Chip Erase Time		180	300	sec
Sector Erase Time		1	5	sec
Erase/Program Cycles		100,000		Cycles
Chip Programming Time (Word Mode)		100	350	sec
Word Program Time		11	360	us

Notes:
1. Typical program and erase times assume the following conditions: 25° C, 3.0V VCC. Programming specifications assume checkboard data pattern.
2. Maximum values are measured at VCC = 3.0 V, worst case temperature. Maximum values are valid up to and including 100,000 program/erase cycles.
3. Erase/Program cycles comply with JEDEC JESD-47E & A117A standard.

LATCH-UP CHARACTERISTICS

	MIN.	MAX.
Input Voltage voltage difference with GND on WP#/ACC, A9, OE, Reset# pins	-1.0V	10.5V
Input Voltage voltage difference with GND on all normal pins input	-1.0V	Vcc x 1.5Vcc
Vcc Current	-100mA	+100mA
All pins included except Vcc. Test conditions: Vcc = 3.0V, one pin per testing		

TSOP PIN CAPACITANCE

Parameter Symbol	Parameter Description	Test Set	TYP	MAX	UNIT
CIN2	Control Pin Capacitance	VIN=0	7.5	9	pF
COUT	Output Capacitance	VOUT=0	8.5	12	pF
CIN	Input Capacitance	VIN=0	6	7.5	pF

ORDERING INFORMATION

PART NO.	ACCESS TIME (ns)	Ball Pitch/ Ball size	PACKAGE	Remark
MX29LV128DTTC-90Q	90		48 Pin TSOP	Pb-free (VCC=3.0V-3.6V)
MX29LV128DBTC-90Q	90		48 Pin TSOP	Pb-free (VCC=3.0V-3.6V)
MX29LV128DTT2C-90Q	90		56 Pin TSOP	Pb-free (VCC=3.0V-3.6V)
MX29LV128DBT2C-90Q	90		56 Pin TSOP	Pb-free (VCC=3.0V-3.6V)
MX29LV128DTMC-90Q*	90		70 Pin SSOP	Pb-free (VCC=3.0V-3.6V)
MX29LV128DTTI-90Q	90		48 Pin TSOP	Pb-free (VCC=3.0V-3.6V)
MX29LV128DBTI-90Q	90		48 Pin TSOP	Pb-free (VCC=3.0V-3.6V)
MX29LV128DTT2I-90Q	90		56 Pin TSOP	Pb-free (VCC=3.0V-3.6V)
MX29LV128DBT2I-90Q	90		56 Pin TSOP	Pb-free (VCC=3.0V-3.6V)

* : Advance Information

PART NAME DESCRIPTION

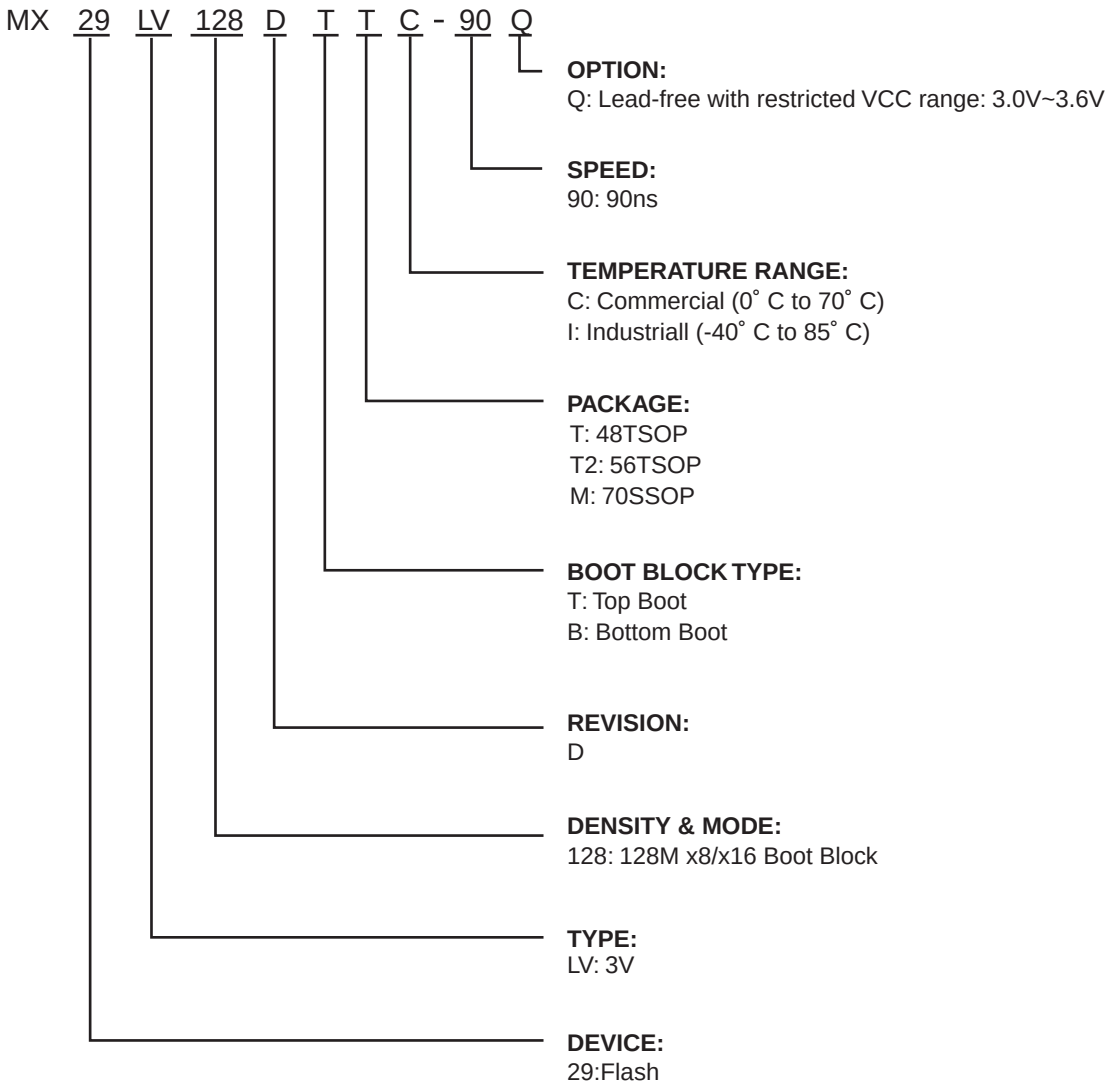

PACKAGE INFORMATION

Title: **Package Outline for TSOP(I) 56L (14X20mm)**

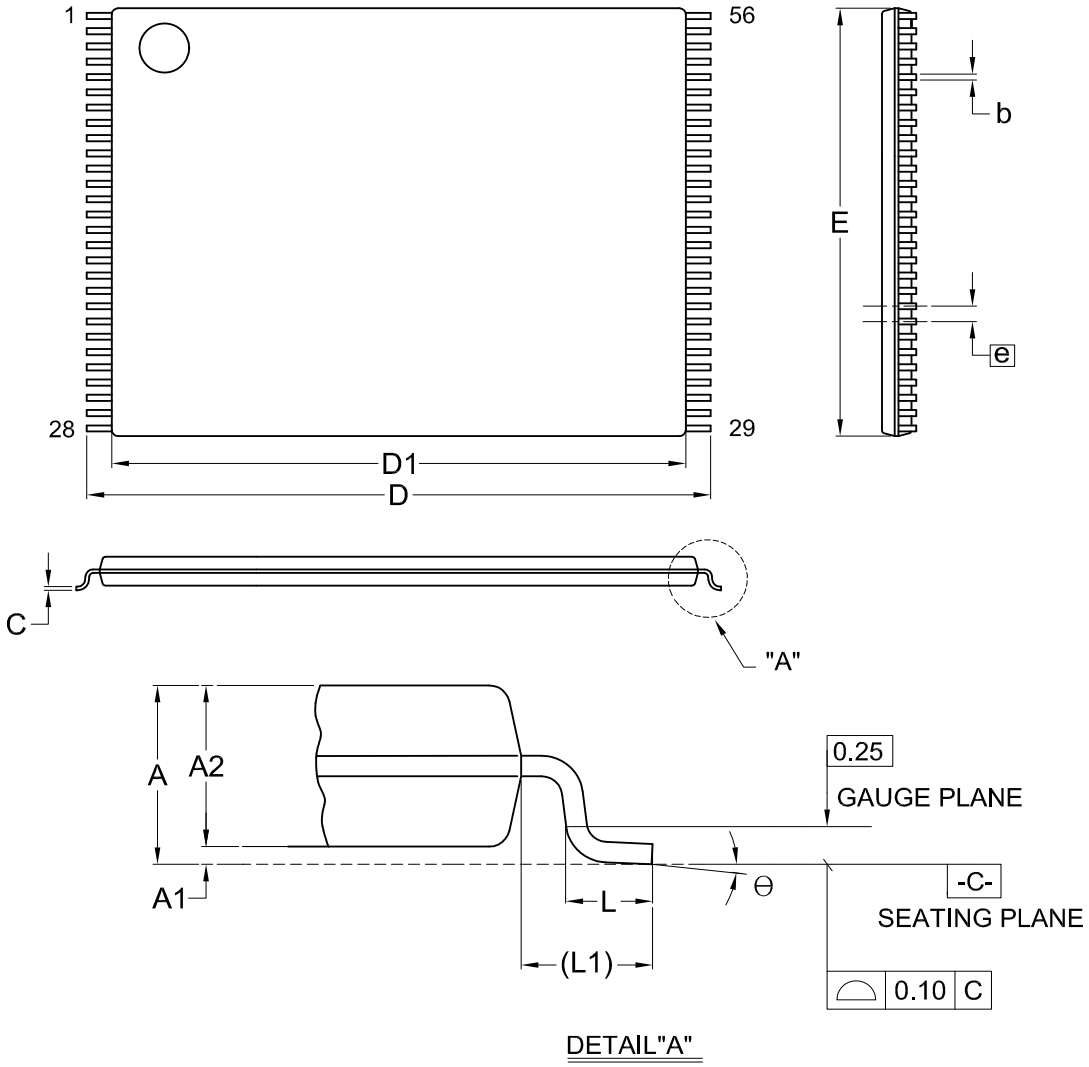

Dimensions (inch dimensions are derived from the original mm dimensions)

SYMBOL / UNIT		A	A1	A2	b	C	D	D1	E	e	L	L1	Θ
mm	Min.	---	0.05	0.95	0.17	0.10	19.80	18.30	13.90		0.50	0.70	0
	Nom.	---	0.10	1.00	0.20	0.13	20.00	18.40	14.00	0.50	0.60	0.80	5
	Max.	1.20	0.15	1.05	0.27	0.21	20.20	18.50	14.10		0.70	0.90	8
Inch	Min.	---	0.002	0.037	0.007	0.004	0.780	0.720	0.547		0.020	0.028	0
	Nom.	---	0.004	0.039	0.008	0.005	0.787	0.724	0.551	0.020	0.024	0.031	5
	Max.	0.047	0.006	0.041	0.011	0.008	0.795	0.728	0.555		0.028	0.035	8

DWG.NO.	REVISION	REFERENCE			ISSUE DATE
		JEDEC	EIAJ		
6110-1608	4	MO-142			12-01-'03

Title: Package Outline for TSOP(I) 48L (12X20mm)NORMAL FORM

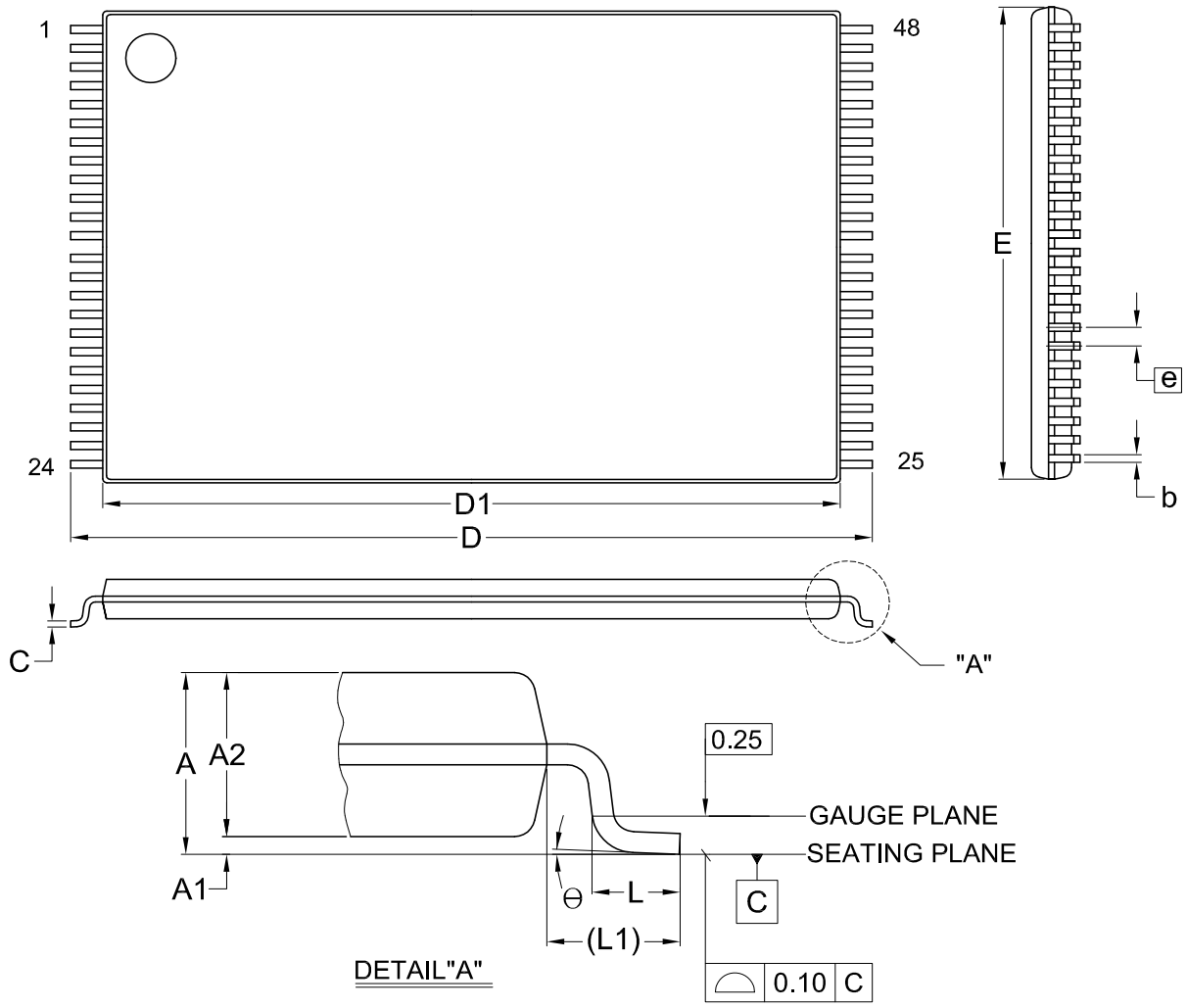

Dimensions (inch dimensions are derived from the original mm dimensions)

SYMBOL / UNIT		A	A1	A2	b	C	D	D1	E	e	L	L1	Θ
mm	Min.	---	0.05	0.95	0.17	0.10	19.80	18.30	11.90	---	0.50	0.70	0
	Nom.	---	0.10	1.00	0.20	0.13	20.00	18.40	12.00	0.50	0.60	0.80	5
	Max.	1.20	0.15	1.05	0.27	0.21	20.20	18.50	12.10	---	0.70	0.90	8
Inch	Min.	---	0.002	0.037	0.007	0.004	0.780	0.720	0.469	---	0.020	0.028	0
	Nom.	---	0.004	0.039	0.008	0.005	0.787	0.724	0.472	0.020	0.024	0.031	5
	Max.	0.047	0.006	0.041	0.011	0.008	0.795	0.728	0.476	---	0.028	0.035	8

DWG.NO.	REVISION	REFERENCE			ISSUE DATE
		JEDEC	EIAJ		
6110-1607	8	MO-142			2007/08/03

Doc. Title: Package Outline for SSOP 70L (500MIL)

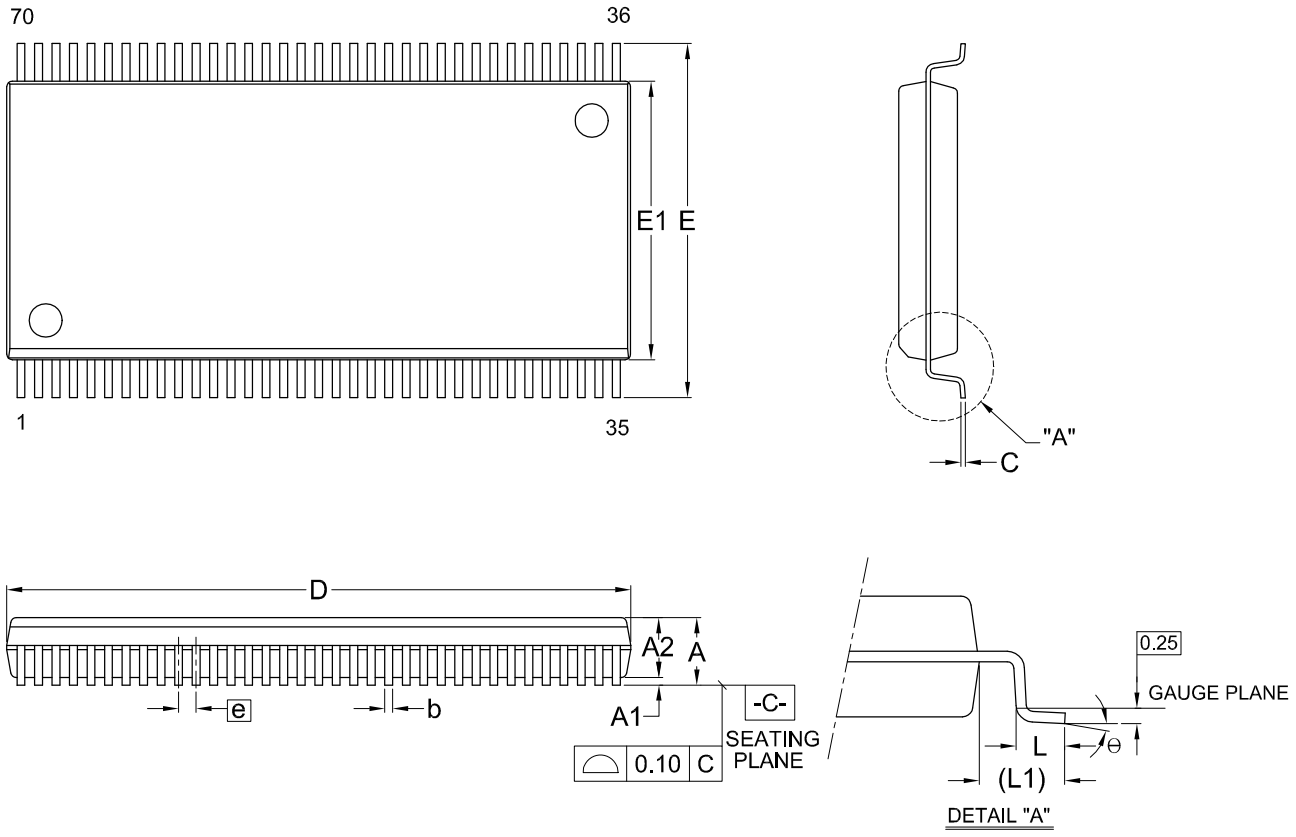

Dimensions (inch dimensions are derived from the original mm dimensions)

SYMBOL / UNIT		A	A1	A2	b	C	D	E	E1	e	L	L1	Θ
mm	Min.	---	0.10	2.56	0.30	0.17	28.37	15.73	12.47	---	0.61	1.51	0
	Nom.	---	0.15	2.69	0.35	0.20	28.50	16.03	12.60	0.80	0.81	1.71	5
	Max.	3.05	0.23	2.82	0.43	0.25	28.63	16.33	12.73	---	1.01	1.91	10
Inch	Min.	---	0.004	0.101	0.012	0.007	1.117	0.619	0.491	---	0.024	0.060	0
	Nom.	---	0.006	0.106	0.014	0.008	1.122	0.631	0.496	0.031	0.032	0.068	5
	Max.	0.120	0.009	0.111	0.017	0.010	1.127	0.643	0.501	---	0.040	0.075	10

Dwg. No.	Revision	Reference			
		JEDEC	EIAJ		
6110-1503	7	MO-174			

REVISION HISTORY

Revision No.	Description	Page	Date
1.0	1. Removed "Preliminary"	P1	SEP/22/2008
	2. Removed 64-FBGA package information	P1,3,67,68	
	3. Added Note for overshoot and undershoot	P39	

Macronix's products are not designed, manufactured, or intended for use for any high risk applications in which the failure of a single component could cause death, personal injury, severe physical damage, or other substantial harm to persons or property, such as life-support systems, high temperature automotive, medical, aircraft and military application. Macronix and its suppliers will not be liable to you and/or any third party for any claims, injuries or damages that may be incurred due to use of Macronix's products in the prohibited applications.

MACRONIX INTERNATIONAL CO., LTD.

Headquarters
Macronix, Int'l Co., Ltd.
16, Li-Hsin Road, Science Park,
Hsinchu, Taiwan, R.O.C.
Tel: +886-3-5786688
Fax: +886-3-5632888

Taipei Office
Macronix, Int'l Co., Ltd.
19F, 4, Min-Chuan E. Road, Sec. 3,
Taipei, Taiwan, R.O.C.
Tel: +886-2-2509-3300
Fax: +886-2-2509-2200

Macronix America, Inc.
680 North McCarthy Blvd.
Milpitas, CA 95035, U.S.A.
Tel: +1-408-262-8887
Fax: +1-408-262-8810
Email: sales.northamerica@macronix.com

Macronix Europe N.V.
Koningin Astridlaan 59, Bus 1
1780 Wemmel Belgium
Tel: +32-2-456-8020
Fax: +32-2-456-8021

Macronix Asia Limited.
NKF Bldg. 5F, 1-2 Higashida-cho,
Kawasaki-ku Kawasaki-shi,
Kanagawa Pref. 210-0005, Japan
Tel: +81-44-246-9100
Fax: +81-44-246-9105

Singapore Office
Macronix Pte. Ltd.
1 Marine Parade Central
#11-03 Parkway Centre
Singapore 449408
Tel: +65-6346-5505
Fax: +65-6348-8096

Macronix (Hong Kong) Co., Limited.
702-703, 7/F, Building 9,
Hong Kong Science Park,
5 Science Park West Avenue, Sha Tin, N.T.
Tel: +86-852-2607-4289
Fax: +86-852-2607-4229

http : //www.macronix.com

MACRONIX INTERNATIONAL CO., LTD. reserves the right to change product and specifications without notice.