MX29GL512F

DATASHEET

Contents

FEATURES **5**
PIN CONFIGURATION **6**
PIN DESCRIPTION **7**
BLOCK DIAGRAM **8**
BLOCK DIAGRAM DESCRIPTION **9**
BLOCK STRUCTURE **10**
Table 1. MX29GL512F SECTOR ARCHITECTURE 10
BUS OPERATION **11**
Table 2-1. BUS OPERATION 11
Table 2-2. BUS OPERATION 12
FUNCTIONAL OPERATION DESCRIPTION **13**
READ OPERATION 13
PAGE READ 13
WRITE OPERATION 13
WRITE BUFFER PROGRAMMING OPERATION 13
DEVICE RESET 14
STANDBY MODE 14
OUTPUT DISABLE 14
BYTE/WORD SELECTION 15
HARDWARE WRITE PROTECT 15
ACCELERATED PROGRAMMING OPERATION 15
SECTOR PROTECT OPERATION 15
AUTOMATIC SELECT BUS OPERATIONS 15
SECTOR LOCK STATUS VERIFICATION 15
READ SILICON ID MANUFACTURER CODE 16
READ INDICATOR BIT (Q7) FOR SECURITY SECTOR 16
INHERENT DATA PROTECTION 16
COMMAND COMPLETION 16
LOW VCC WRITE INHIBIT 16
WRITE PULSE "GLITCH" PROTECTION 17
LOGICAL INHIBIT 17
POWER-UP SEQUENCE 17
POWER-UP WRITE INHIBIT 17
POWER SUPPLY DECOUPLING 17
COMMAND OPERATIONS **18**
READING THE MEMORY ARRAY 18
AUTOMATIC PROGRAMMING OF THE MEMORY ARRAY 18
ERASING THE MEMORY ARRAY 19
SECTOR ERASE 19

CHIP ERASE 20
ERASE SUSPEND/RESUME 21
SECTOR ERASE RESUME 21
PROGRAM SUSPEND/RESUME 22
PROGRAM RESUME 22
BUFFER WRITE ABORT 22
AUTOMATIC SELECT OPERATIONS 23
AUTOMATIC SELECT COMMAND SEQUENCE 23
READ MANUFACTURER ID OR DEVICE ID 23
RESET 24
ADVANCED SECTOR PROTECTION/UN-PROTECTION 25
Figure 1. Advance Sector Protection/Unprotection SPB Program Algorithm 25
Figure 2. Lock Register Program Algorithm 26
Figure 3. SPB Program Algorithm 28
TABLE 3. COMMAND DEFINITIONS 32
COMMON FLASH MEMORY INTERFACE (CFI) MODE 35
QUERY COMMAND AND COMMAND FLASH MEMORY INTERFACE (CFI) MODE 35
Table 4-1. CFI mode: Identification Data Values (Note 1) 35
Table 4-2. CFI mode: System Interface Data Values 35
Table 4-3. CFI mode: Device Geometry Data Values 36
Table 4-4. CFI mode: Primary Vendor-Specific Extended Query Data Values 37
ELECTRICAL CHARACTERISTICS 38
ABSOLUTE MAXIMUM STRESS RATINGS 38
OPERATING TEMPERATURE AND VOLTAGE 38
Maximum Negative Overshoot Waveform 38
Maximum Positive Overshoot Waveform 38
DC CHARACTERISTICS 39
SWITCHING TEST CIRCUITS 40
SWITCHING TEST WAVEFORMS 40
AC CHARACTERISTICS 41
WRITE COMMAND OPERATION 43
Figure 4. COMMAND WRITE OPERATION 43
READ/RESET OPERATION 44
Figure 5. READ TIMING WAVEFORMS 44
Figure 6. RESET# TIMING WAVEFORM 45
ERASE/PROGRAM OPERATION 46
Figure 7. AUTOMATIC CHIP ERASE TIMING WAVEFORM 46
Figure 8. AUTOMATIC CHIP ERASE ALGORITHM FLOWCHART 47
Figure 9. AUTOMATIC SECTOR ERASE TIMING WAVEFORM 48
Figure 10. AUTOMATIC SECTOR ERASE ALGORITHM FLOWCHART 49

Figure 11. ERASE SUSPEND/RESUME FLOWCHART 50
Figure 12. AUTOMATIC PROGRAM TIMING WAVEFORMS 51
Figure 13. ACCELERATED PROGRAM TIMING DIAGRAM 51
Figure 14. CE# CONTROLLED WRITE TIMING WAVEFORM 52
Figure 15. AUTOMATIC PROGRAMMING ALGORITHM FLOWCHART 53
Figure 16. SILICON ID READ TIMING WAVEFORM 54
WRITE OPERATION STATUS 55
Figure 17. DATA# POLLING TIMING WAVEFORMS (DURING AUTOMATIC ALGORITHMS) 55
Figure 18. STATUS POLLING FOR WORD PROGRAM/ERASE 56
Figure 19. STATUS POLLING FOR WRITE BUFFER PROGRAM 57
Figure 20. TOGGLE BIT TIMING WAVEFORMS (DURING AUTOMATIC ALGORITHMS) 58
Figure 21. TOGGLE BIT ALGORITHM 59
Figure 22. BYTE# TIMING WAVEFORM FOR READ OPERATIONS (BYTE# switching from byte mode to word mode) 60
Figure 23. PAGE READ TIMING WAVEFORM 61
Figure 24. DEEP POWER DOWN MODE WAVEFORM 62
Figure 25. WRITE BUFFER PROGRAM FLOWCHART 63
RECOMMENDED OPERATING CONDITIONS 64
At Device Power-Up 64
ERASE AND PROGRAMMING PERFORMANCE 65
DATA RETENTION 65
LATCH-UP CHARACTERISTICS 65
PIN CAPACITANCE 65
ORDERING INFORMATION 66
PART NAME DESCRIPTION 67
PACKAGE INFORMATION 68
REVISION HISTORY 71

SINGLE VOLTAGE 3V ONLY FLASH MEMORY

FEATURES

GENERAL FEATURES

- 2.7 to 3.6 volt for read, erase, and program operations
- Byte/Word mode switchable
  - 67,108,864 x 8 / 33,554,432 x 16
- 64KW/128KB uniform sector architecture
  - 512 equal sectors
- 16-byte/8-word page read buffer
- 64-byte/32-word write buffer
- Extra 128-word sector for security
  - Features factory locked and identifiable, and customer lockable
- Advanced sector protection function (Solid and Password Protect)
- Compatible with JEDEC standard
  - Pinout and software compatible to single power supply Flash

PERFORMANCE

- High Performance
  - Fast access time:
    - MX29GL512F H/L: 100ns (VCC=3.0~3.6V), 110ns (VCC=2.7~3.6V)
    - MX29GL512F U/D: 110ns/120ns (VCC=2.7~3.6V, V I/O=1.65 to Vcc)
  - Page access time:
    - MX29GL512F H/L: 25ns
    - MX29GL512F U/D: 30ns
  - Fast program time: 10us/word
  - Fast erase time: 0.5s/sector
- Low Power Consumption
  - Low active read current: 10mA (typical) at 5MHz
  - Low standby current: 40uA (typical)
- Minimum 100,000 erase/program cycle
- 20 years data retention

SOFTWARE FEATURES

- Program/Erase Suspend & Program/Erase Resume
- Status Reply
  - Data# Polling & Toggle bits provide detection of program and erase operation completion
- Support Common Flash Interface (CFI)

HARDWARE FEATURES

- Ready/Busy# (RY/BY#) Output
  - Provides a hardware method of detecting program and erase operation completion
- Hardware Reset (RESET#) Input
  - Provides a hardware method to reset the internal state machine to read mode
- WP#/ACC input pin
  - Hardware write protect pin/Provides accelerated program capability

PACKAGE

- 56-Pin TSOP
- 64-Ball LFBGA (11mm x 13mm)
- 56-Ball FBGA (7mm x 9mm)
- **All devices are RoHS Compliant and Halogen-free**

PIN CONFIGURATION

56 TSOP

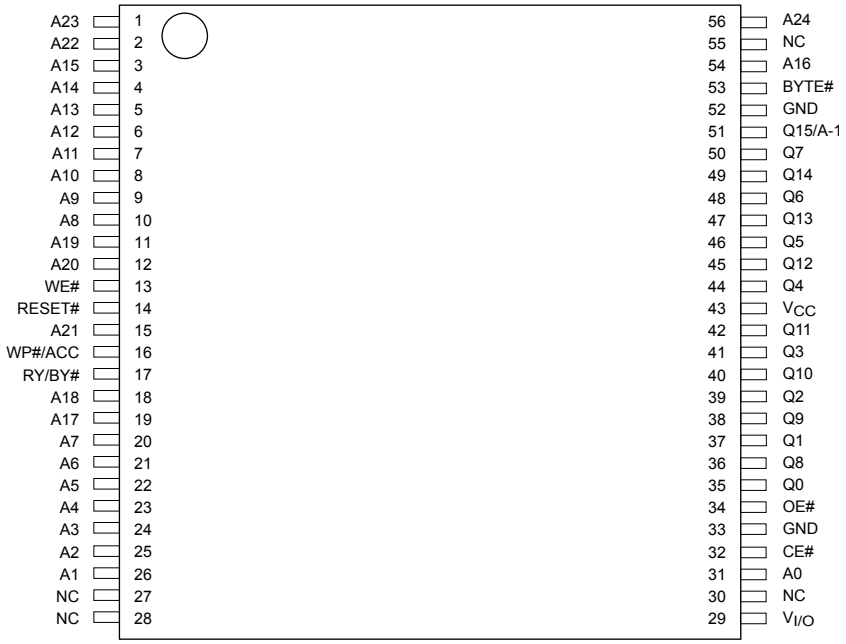

64 LFBGA

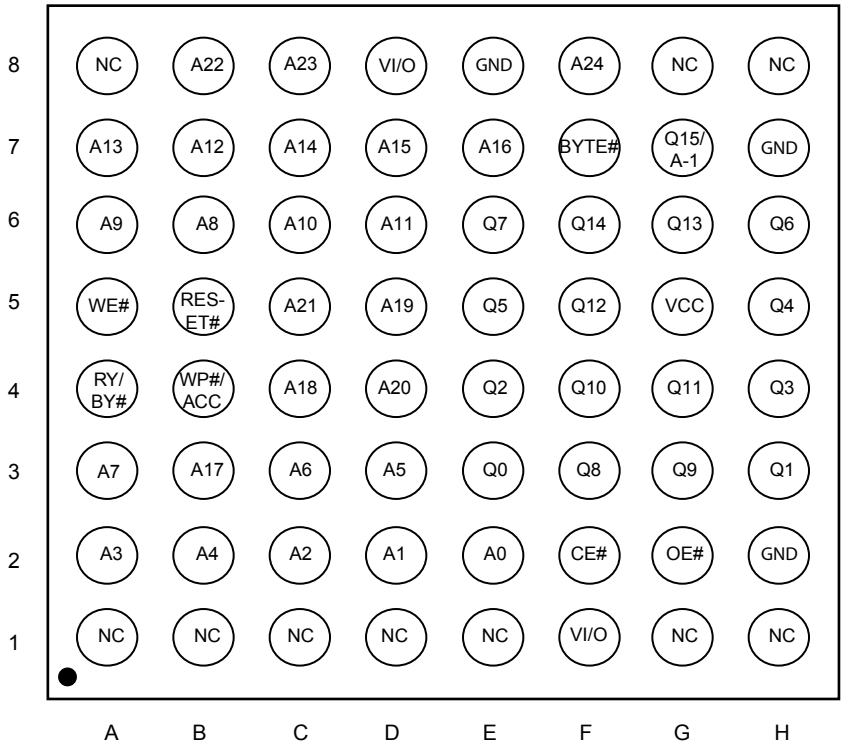

56 FBGA (7x9x1.2mm)

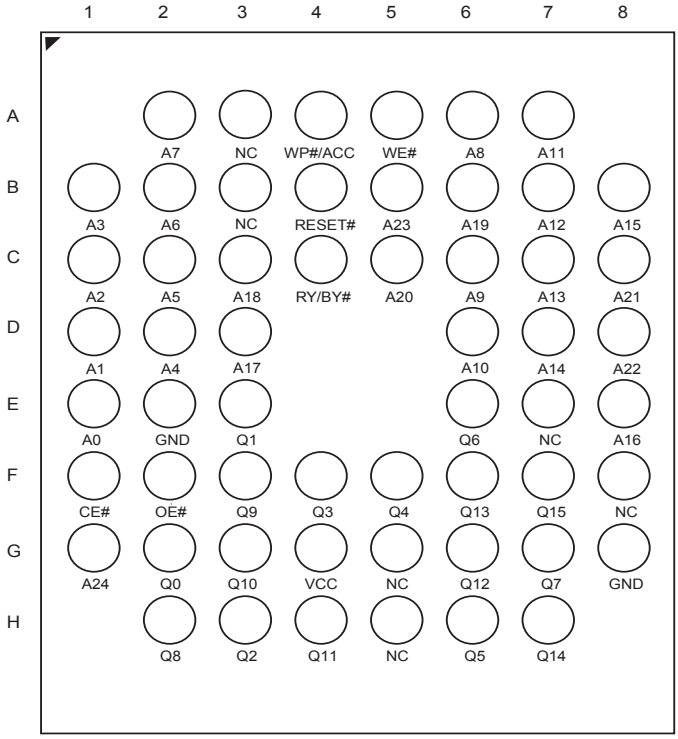

Note: 56-FBGA only support word mode.

PIN DESCRIPTION

SYMBOL	PIN NAME
A0~A24	Address Input
Q0~Q14	Data Inputs/Outputs
Q15/A-1	Q15(Word Mode)/LSB addr(Byte Mode)
CE#	Chip Enable Input
WE#	Write Enable Input
OE#	Output Enable Input
RESET#	Hardware Reset Pin, Active Low
WP#/ACC*	Hardware Write Protect/Programming Acceleration input
RY/BY#	Ready/Busy Output
BYTE#	Selects 8 bits or 16 bits mode
VCC	+3.0V single power supply
GND	Device Ground
NC	Not Connected
VI/O	Power Supply for Input/Output

LOGIC SYMBOL

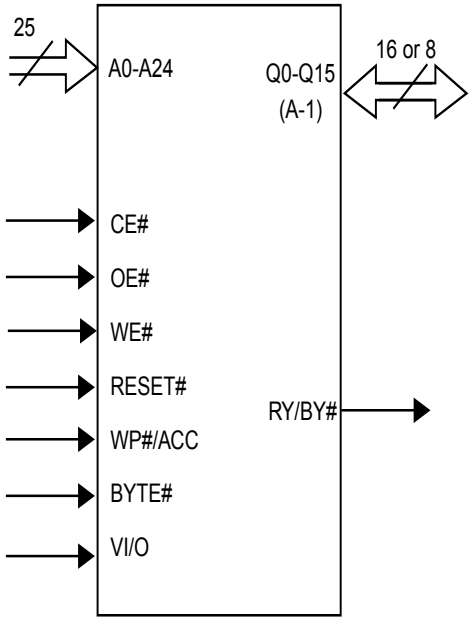

Notes:
1. WP#/ACC has internal pull up.
2. VI/O voltage must be tight with VCC for MX29GL512F H/L.

BLOCK DIAGRAM

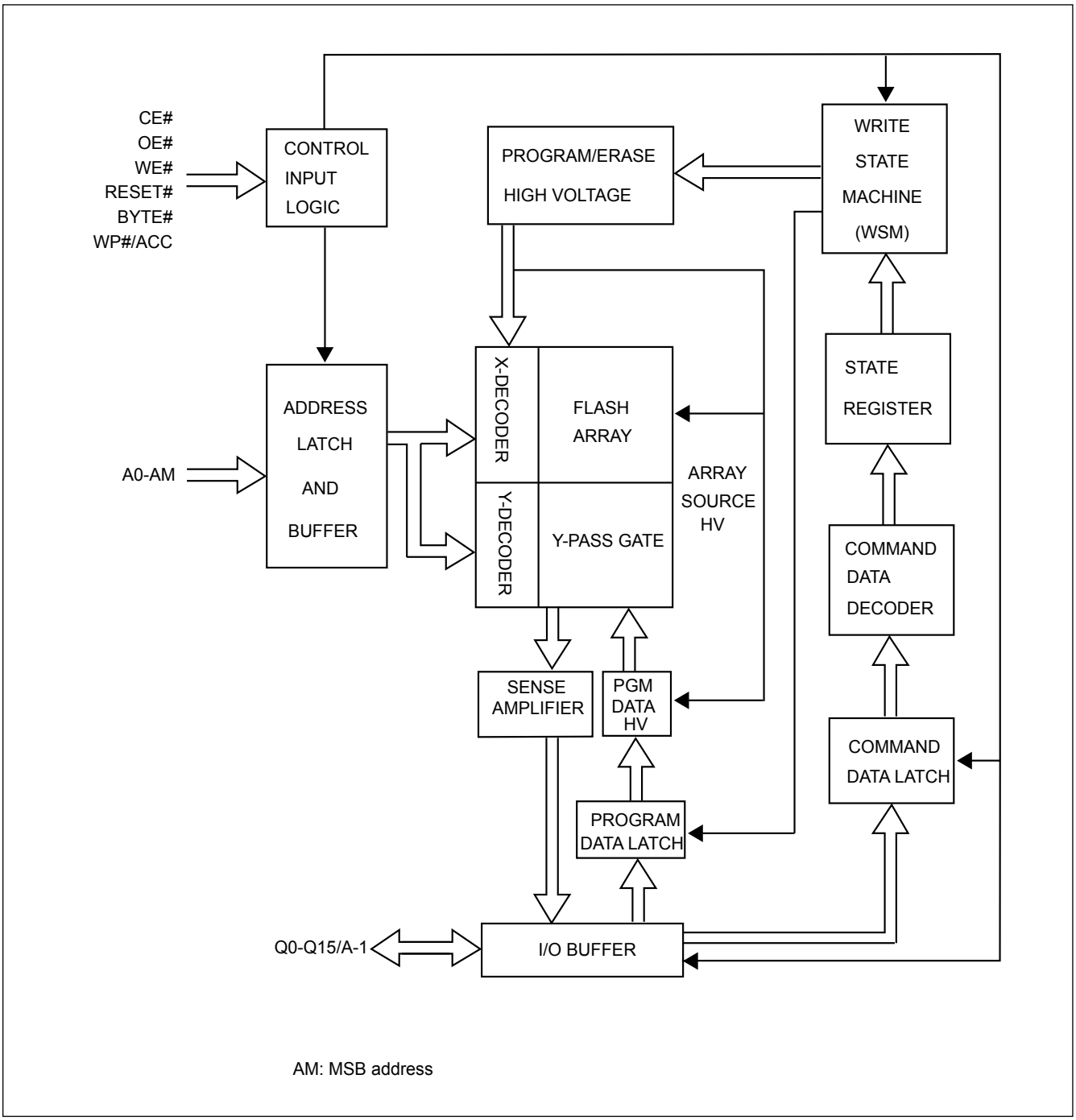

BLOCK DIAGRAM DESCRIPTION

The *"BLOCK DIAGRAM"* illustrates a simplified architecture of this device. Each block in the block diagram represents one or more circuit modules in the real chip used to access, erase, program, and read the memory array.

The "CONTROL INPUT LOGIC" block receives input pins CE#, OE#, WE#, RESET#, BYTE#, and WP#/ACC. It creates internal timing control signals according to the input pins and outputs to the "ADDRESS LATCH AND BUFFER" to latch the external address pins A0-AM. The internal addresses are output from this block to the main array and decoders composed of "X-DECODER", "Y-DECODER", "Y-PASS GATE", AND "FLASH ARRAY". The X-DECODER decodes the word-lines of the flash array, while the Y-DECODER decodes the bit-lines of the flash array. The bit lines are electrically connected to the "SENSE AMPLIFIER" and "PGM DATA HV" selectively through the Y-PASS GATES. SENSE AMPLIFIERS are used to read out the contents of the flash memory, while the "PGM DATA HV" block is used to selectively deliver high power to bit-lines during programming. The "I/O BUFFER" controls the input and output on the Q0-Q15/A-1 pads. During read operation, the I/O BUFFER receives data from SENSE AMPLIFIERS and drives the output pads accordingly. In the last cycle of program command, the I/O BUFFER transmits the data on Q0-Q15/A-1 to "PROGRAM DATA LATCH", which controls the high power drivers in "PGM DATA HV" to selectively program the bits in a word or byte according to the user input pattern.

The "PROGRAM/ERASE HIGH VOLTAGE" block comprises the circuits to generate and deliver the necessary high voltage to the X-DECODER, FLASH ARRAY, and "PGM DATA HV" blocks. The logic control module comprises of the "WRITE STATE MACHINE, WSM", "STATE REGISTER", "COMMAND DATA DECODER", and "COMMAND DATA LATCH". When the user issues a command by toggling WE#, the command on Q0-Q15/A-1 is latched in the COMMAND DATA LATCH and is decoded by the COMMAND DATA DECODER. The STATE REGISTER receives the command and records the current state of the device. The WSM implements the internal algorithms for program or erase according to the current command state by controlling each block in the block diagram.

ARRAY ARCHITECTURE

The main flash memory array can be organized as Byte mode (x8) or Word mode (x16). The details of the address ranges and the corresponding sector addresses are shown in Table 1.

BLOCK STRUCTURE

Table 1. MX29GL512F SECTOR ARCHITECTURE

Sector Size		Sector	Sector Address A24-A16	Address Range (x16)
Kbytes	Kwords			
128	64	SA0	000000000	0000000h-000FFFFh
128	64	SA1	000000001	0010000h-001FFFFh
128	64	SA2	000000010	0020000h-002FFFFh
:	:	:	:	:
:	:	:	:	:
128	64	SA511	111111111	1FF0000h-1FFFFFFh

BUS OPERATION

Table 2-1. BUS OPERATION

Mode Select	RE-SET#	CE#	WE#	OE#	Address (Note4)	Data I/O Q7~Q0	Byte# Vil Data (I/O) Q15~Q8	Byte# Vih Data (I/O) Q15~Q8	WP#/ ACC
Device Reset	L	X	X	X	X	HighZ	HighZ	HighZ	L/H
Standby Mode	Vcc ± 0.3V	Vcc± 0.3V	X	X	X	HighZ	HighZ	HighZ	H
Output Disable	H	L	H	H	X	HighZ	HighZ	HighZ	L/H
Read Mode	H	L	H	L	AIN	DOUT	Q8-Q14= HighZ, Q15=A-1	DOUT	L/H
Write	H	L	L	H	AIN	DIN		DIN	Note1,2
Accelerate Program	H	L	L	H	AIN	DIN		DIN	Vhv

Notes:
1. The first or last sector was protected if WP#/ACC=Vil.
2. When WP#/ACC = Vih, the protection conditions of the outmost sector depends on previous protection conditions. Refer to the advanced protect feature.
3. Q0~Q15 are input (DIN) or output (DOUT) pins according to the requests of command sequence, sector protection, or data polling algorithm.
4. In Word Mode (Byte#=Vih), the addresses are AM to A0, AM: MSB of address.
   In Byte Mode (Byte#=Vil), the addresses are AM to A-1 (Q15), AM: MSB of address.

Table 2-2. BUS OPERATION

Item	Control Input			AM to A12	A11 to A10	A9	A8 to A7	A6	A5 to A4	A3 to A2	A1	A0	Q7 ~ Q0	Q15 ~ Q8
	CE#	WE#	OE#											
Sector Lock Status Verification	L	H	L	SA	X	V_{hv}	X	L	X	L	H	L	01h or 00h (Note 1)	X
Read Silicon ID Manufacturer Code	L	H	L	X	X	V_{hv}	X	L	X	L	L	L	C2H	X
Read Silicon ID														
Cycle 1	L	H	L	X	X	V_{hv}	X	L	X	L	L	H	7EH	22H(Word), XXH(Byte)
Cycle 2	L	H	L	X	X	V_{hv}	X	L	X	H	H	L	23H	22H(Word), XXH(Byte)
Cycle 3	L	H	L	X	X	V_{hv}	X	L	X	H	H	H	01H	22H(Word), XXH(Byte)

Notes:
1. Sector unprotected code:00h. Sector protected code:01h.
2. Factory locked code: WP# protects high address sector: 99h.
   WP# protects low address sector: 89h
   Factory unlocked code: WP# protects high address sector: 19h.
   WP# protects low address sector: 09h
3. AM: MSB of address.

FUNCTIONAL OPERATION DESCRIPTION

READ OPERATION

To perform a read operation, the system addresses the desired memory array or status register location by providing its address on the address pins and simultaneously enabling the chip by driving CE# & OE# LOW, and WE# HIGH. After the Tce and Toe timing requirements have been met, the system can read the contents of the addressed location by reading the Data (I/O) pins. If either the CE# or OE# is held HIGH, the outputs will remain tri-stated and no data will appear on the output pins.

PAGE READ

This device offered high performance page read. Page size is 16 bytes or 8 words. The higher address Amax ~ A3 select the certain page, while A2~A0 for word mode, A2~A-1 for byte mode select the particular word or byte in a page. The page access time is Taa or Tce, following by Tpa for the rest of the page read time. When CE# toggles, access time is Taa or Tce. Page mode can be turned on by keeping "page-read address" constant and changing the "intra-read page" addresses.

WRITE OPERATION

To perform a write operation, the system provides the desired address on the address pins, enables the chip by asserting CE# LOW, and disables the Data (I/O) pins by holding OE# HIGH. The system then places data to be written on the Data (I/O) pins and pulses WE# LOW. The device captures the address information on the falling edge of WE# and the data on the rising edge of WE#. To see an example, please refer to the timing diagram in *Figure 4*. The system is not allowed to write invalid commands (commands not defined in this datasheet) to the device. Writing an invalid command may put the device in an undefined state.

WRITE BUFFER PROGRAMMING OPERATION

Programs 64bytes/32words in a programming operation. To trigger the Write Buffer Programming, start by the first two unlock cycles, then third cycle writes the Write Buffer Load command at the destined programming Sector Address. The forth cycle writes the "word locations subtract one" number.

Following above operations, system starts to write the mingling of address and data. After the programming of the first address or data, the "write-buffer-page" is selected. The following data should be within the above mentioned page.

The "write-buffer-page" is selected by choosing address Amax-A5.

"Write-Buffer-Page" address has to be the same for all address/ data write into the write buffer. If not, operation will ABORT.

To program the content of the write buffer page this command must be followed by a write to buffer Program confirm command.

The operation of write-buffer can be suspended or resumed by the standard commands, once the write buffer programming operation is finished, it'll return to normal READ mode.

FUNCTIONAL OPERATION DESCRIPTION (cont'd)

WRITE BUFFER PROGRAMMING OPERATION (cont'd)

ABORT will be executed for the Write Buffer Programming Sequence if following condition occurs:
- The value loaded is bigger than the page buffer size during "Number of Locations to Program"
- Address written in a sector is not the same as the one assigned during the Write-Buffer-Load command.
- Address/ Data pair written to a different write-buffer-page than the one assigned by the "Starting Address" during the "write buffer data loading" operation.
- Writing not "Confirm Command" after the assigned number of "data load" cycles.

At Write Buffer Abort mode, the status register will be Q1=1, Q7=DATA# (last address written), Q6=toggle.
A Write-to-Buffer-Abort Reset command sequence has to be written to reset the device for the next operation.

Write buffer programming can be conducted in any sequence. However the CFI functions, autoselect, Secured Silicon sector are not functional when program operation is in progress. Multiple write buffer programming operations on the same write buffer address range without intervening erases is available. Any bit in a write buffer address range can't be programmed from 0 back to 1.

DEVICE RESET

Driving the RESET# pin LOW for a period of Trp or more will return the device to Read mode. If the device is in the middle of a program or erase operation, the reset operation will take at most a period of Tready1 before the device returns to Read mode. Until the device does returns to Read mode, the RY/BY# pin will remain Low (Busy Status).

When the RESET# pin is held at GND±0.3V, the device only consumes standby (Isbr) current. However, the device draws larger current if the RESET# pin is held at a voltage greater than GND+0.3V and less than or equal to Vil.

It is recommended to tie the system reset signal to the RESET# pin of the flash memory. This allows the device to be reset with the system and puts it in a state where the system can immediately begin reading boot code from it.

STANDBY MODE

The device enters Standby mode whenever the RESET# and CE# pins are both held High except in the embedded mode. While in this mode, WE# and OE# will be ignored, all Data Output pins will be in a high impedance state, and the device will draw minimal (Isb) current.

OUTPUT DISABLE

While in active mode (RESET# HIGH and CE# LOW), the OE# pin controls the state of the output pins. If OE# is held HIGH, all Data (I/O) pins will remain tri-stated. If held LOW, the Byte or Word Data (I/O) pins will drive data.

FUNCTIONAL OPERATION DESCRIPTION (cont'd)

BYTE/WORD SELECTION

The BYTE# input pin is used to select the organization of the array data and how the data is input/output on the Data (I/O) pins. If the BYTE# pin is held HIGH, Word mode will be selected and all 16 data lines (Q0 to Q15) will be active.

If BYTE# is forced LOW, Byte mode will be active and only data lines Q0 to Q7 will be active. Data lines Q8 to Q14 will remain in a high impedance state and Q15 becomes the A-1 address input pin.

HARDWARE WRITE PROTECT

By driving the WP#/ACC pin LOW. The highest or lowest was protected from all erase/program operations. If WP#/ACC is held HIGH (Vih to VCC), these sectors revert to their previously protected/unprotected status.

ACCELERATED PROGRAMMING OPERATION

By applying high voltage (Vhv) to the WP#/ACC pin, the device will enter the Accelerated Programming mode. This mode permits the system to skip the normal command unlock sequences and program byte/word locations directly. During accelerated programming, the current drawn from the WP#/ACC pin is no more than ICP1.

SECTOR PROTECT OPERATION

The device provides user programmable protection operations for selected sectors. Please refer to *"Table 1. MX29GL512F SECTOR ARCHITECTURE"* which show all Sector assignments.

During the protection operation, the sector address of any sector may be used to specify the Sector being protected.

AUTOMATIC SELECT BUS OPERATIONS

The following five bus operations require A9 to be raised to Vhv. Please see AUTOMATIC SELECT COMMAND SEQUENCE in the COMMAND OPERATIONS section for details of equivalent command operations that do not require the use of Vhv.

SECTOR LOCK STATUS VERIFICATION

To determine the protected state of any sector using bus operations, the system performs a READ OPERATION with A9 raised to Vhv, the sector address applied to address pins A24 to A16, address pins A6, A3, A2 & A0 held LOW, and address pin A1 held HIGH. If data bit Q0 is LOW, the sector is not protected, and if Q0 is HIGH, the sector is protected.

FUNCTIONAL OPERATION DESCRIPTION (cont'd)

READ SILICON ID MANUFACTURER CODE

To determine the Silicon ID Manufacturer Code, the system performs a READ OPERATION with A9 raised to Vhv and address pins A6, A3, A2, A1, & A0 held LOW. The Macronix ID code of C2h should be present on data bits Q7 to Q0.

READ INDICATOR BIT (Q7) FOR SECURITY SECTOR

To determine if the Security Sector has been locked at the factory, the system performs a READ OPERATION with A9 raised to Vhv, address pin A6, A3 & A2 held LOW, and address pins A1 & A0 held HIGH. If the Security Sector has been locked at the factory, the code 99h(H)/89h(L) will be present on data bits Q7 to Q0. Otherwise, the factory unlocked code of 19h(H)/09h(L) will be present.

INHERENT DATA PROTECTION

To avoid accidental erasure or programming of the device, the device is automatically reset to Read mode during power up. Additionally, the following design features protect the device from unintended data corruption.

COMMAND COMPLETION

Only after the successful completion of the specified command sets will the device begin its erase or program operation. The failure in observing valid command sets will result in the memory returning to read mode.

LOW VCC WRITE INHIBIT

The device refuses to accept any write command when Vcc is less than VLKO. This prevents data from spuriously being altered during power-up, power-down, or temporary power interruptions. The device automatically resets itself when Vcc is lower than VLKO and write cycles are ignored until Vcc is greater than VLKO. The system must provide proper signals on control pins after Vcc rises above VLKO to avoid unintentional program or erase operations.

FUNCTIONAL OPERATION DESCRIPTION (cont'd)

WRITE PULSE "GLITCH" PROTECTION

CE#, WE#, OE# pulses shorter than 5ns are treated as glitches and will not be regarded as an effective write cycle.

LOGICAL INHIBIT

A valid write cycle requires both CE# and WE# at Vil with OE# at Vih. Write cycle is ignored when either CE# at Vih, WE# at Vih, or OE# at Vil.

POWER-UP SEQUENCE

Upon power up, the device is placed in Read mode. Furthermore, program or erase operation will begin only after successful completion of specified command sequences.

POWER-UP WRITE INHIBIT

When WE#, CE# is held at Vil and OE# is held at Vih during power up, the device ignores the first command on the rising edge of WE#.

POWER SUPPLY DECOUPLING

A 0.1uF capacitor should be connected between the Vcc and GND to reduce the noise effect.

COMMAND OPERATIONS

READING THE MEMORY ARRAY

Read mode is the default state after power up or after a reset operation. To perform a read operation, please refer to READ OPERATION in the BUS OPERATIONS section above.

If the device receives an Erase Suspend command while in the Sector Erase state, the erase operation will pause (after a time delay not exceeding 20us) and the device will enter Erase-Suspended Read mode. While in the Erase-Suspended Read mode, data can be programmed or read from any sector not being erased. Reading from addresses within sector (s) being erased will only return the contents of the status register, which is in fact how the current status of the device can be determined.

If a program command is issued to any inactive (not currently being erased) sector during Erase-Suspended Read mode, the device will perform the program operation and automatically return to Erase-Suspended Read mode after the program operation completes successfully.

While in Erase-Suspended Read mode, an Erase Resume command must be issued by the system to reactivate the erase operation. The erase operation will resume from where is was suspended and will continue until it completes successfully or another Erase Suspend command is received.

After the memory device completes an embedded operation (automatic Chip Erase, Sector Erase, or Program) successfully, it will automatically return to Read mode and data can be read from any address in the array. If the embedded operation fails to complete, as indicated by status register bit Q5 (exceeds time limit flag) going HIGH during the operations, the system must perform a reset operation to return the device to Read mode.

There are several states that require a reset operation to return to Read mode:

1. A program or erase failure--indicated by status register bit Q5 going HIGH during the operation. Failures during either of these states will prevent the device from automatically returning to Read mode.

2. The device is in Auto Select mode or CFI mode. These two states remain active until they are terminated by a reset operation.

In the two situations above, if a reset operation (either hardware reset or software reset command) is not performed, the device will not return to Read mode and the system will not be able to read array data.

AUTOMATIC PROGRAMMING OF THE MEMORY ARRAY

The device provides the user the ability to program the memory array in Byte mode or Word mode. As long as the users enters the correct cycle defined in the *"TABLE 3. COMMAND DEFINITIONS"* (including 2 unlock cycles and the A0H program command), any byte or word data provided on the data lines by the system will automatically be programmed into the array at the specified location.

After the program command sequence has been executed, the internal write state machine (WSM) automatically executes the algorithms and timings necessary for programming and verification, which includes generating suitable program pulses, checking cell threshold voltage margins, and repeating the program pulse if any cells do not pass verification or have low margins. The internal controller protects cells that do pass verification and margin tests from being over-programmed by inhibiting further program pulses to these passing cells as weaker cells continue to be programmed.

With the internal WSM automatically controlling the programming process, the user only needs to enter the program command and data once.

COMMAND OPERATIONS (cont'd)

AUTOMATIC PROGRAMMING OF THE MEMORY ARRAY (cont'd)

Programming will only change the bit status from "1" to "0". It is not possible to change the bit status from "0" to "1" by programming. This can only be done by an erase operation. Furthermore, the internal write verification only checks and detects errors in cases where a "1" is not successfully programmed to "0".

Any commands written to the device during programming will be ignored except hardware reset or program suspend. Hardware reset will terminate the program operation after a period of time no more than 10us. When the embedded program algorithm is complete or the program operation is terminated by a hardware reset, the device will return to Read mode. Program suspend ready, the device will enter program suspend read mode.

After the embedded program operation has begun, the user can check for completion by reading the following bits in the status register:

Status	Q7*1	Q6*1	Q5	Q1	RY/BY# (Note)
In progress	Q7#	Toggling	0	0	0
Exceed time limit	Q7#	Toggling	1	N/A	0

Note: RY/BY# is an open drain output pin and should be connected to VCC through a high value pull-up resistor.

ERASING THE MEMORY ARRAY

There are two types of erase operations performed on the memory array -- Sector Erase and Chip Erase. In the Sector Erase operation, one or more selected sectors may be erased simultaneously. In the Chip Erase operation, the complete memory array is erased except for any protected sectors. More details of the protected sectors are explained in section 5.

SECTOR ERASE

The sector erase operation is used to clear data within a sector by returning all of its memory locations to the "1" state. It requires six command cycles to initiate the erase operation. The first two cycles are "unlock cycles", the third is a configuration cycle, the fourth and fifth are also "unlock cycles", and the sixth cycle is the Sector Erase command. After the sector erase command sequence has been issued, an internal 50us time-out counter is started. Until this counter reaches zero, additional sector addresses and Sector Erase commands may be issued thus allowing multiple sectors to be selected and erased simultaneously. After the 50us time-out counter has expired, no new commands will be accepted and the embedded sector erase operation will begin. Note that the 50us timer-out counter is restarted after every erase command sequence. If the user enters any command other than Sector Erase or Erase Suspend during the time-out period, the erase operation will abort and the device will return to Read mode.

After the embedded sector erase operation begins, all commands except Erase Suspend will be ignored. The only way to interrupt the operation is with an Erase Suspend command or with a hardware reset. The hardware reset will completely abort the operation and return the device to Read mode.

COMMAND OPERATIONS (cont'd)

SECTOR ERASE (cont'd)

The system can determine the status of the embedded sector erase operation by the following methods:

Status	Q7	Q6	Q5	Q3*1	Q2	RY/BY#*2
Time-out period	0	Toggling	0	0	Toggling	0
In progress	0	Toggling	0	1	Toggling	0
Exceeded time limit	0	Toggling	1	1	Toggling	0

Note:
1. The Q3 status bit is the 50us time-out indicator. When Q3=0, the 50us time-out counter has not yet reached zero and a new Sector Erase command may be issued to specify the address of another sector to be erased. When Q3=1, the 50us time-out counter has expired and the Sector Erase operation has already begun. Erase Suspend is the only valid command that may be issued once the embedded erase operation is underway.
2. RY/BY# is open drain output pin and should be connected to VCC through a high value pull-up resistor.
3. When an attempt is made to erase only protected sector (s), the erase operation will abort thus preventing any data changes in the protected sector (s). Q7 will output "0" and Q6 will toggle briefly (100us or less) before aborting and returning the device to Read mode. If unprotected sectors are also specified, however, they will be erased normally and the protected sector (s) will remain unchanged.
4. Q2 is a localized indicator showing a specified sector is undergoing erase operation or not. Q2 toggles when user reads at addresses where the sectors are actively being erased (in erase mode) or to be erased (in erase suspend mode).

CHIP ERASE

The Chip Erase operation is used erase all the data within the memory array. All memory cells containing a "0" will be returned to the erased state of "1". This operation requires 6 write cycles to initiate the action. The first two cycles are "unlock" cycles, the third is a configuration cycle, the fourth and fifth are also "unlock" cycles, and the sixth cycle initiates the chip erase operation.

During the chip erase operation, no other software commands will be accepted, but if a hardware reset is received or the working voltage is too low, that chip erase will be terminated. After Chip Erase, the chip will automatically return to Read mode.

The system can determine the status of the embedded chip erase operation by the following methods:

Status	Q7	Q6	Q5	Q2	RY/BY#*1
In progress	0	Toggling	0	Toggling	0
Exceed time limit	0	Toggling	1	Toggling	0

*1: RY/BY# is open drain output pin and should be connected to VCC through a high value pull-up resistor.

COMMAND OPERATIONS (cont'd)

ERASE SUSPEND/RESUME

After beginning a sector erase operation, Erase Suspend is the only valid command that may be issued. If system issues an Erase Suspend command during the 50us time-out period following a Sector Erase command, the time-out period will terminate immediately and the device will enter Erase-Suspended Read mode. If the system issues an Erase Suspend command after the sector erase operation has already begun, the device will not enter Erase-Suspended Read mode until 20us time has elapsed. The system can determine if the device has entered the Erase-Suspended Read mode through Q6, Q7, and RY/BY#.

After the device has entered Erase-Suspended Read mode, the system can read or program any sector (s) except those being erased by the suspended erase operation. Reading any sector being erased or programmed will return the contents of the status register. Whenever a suspend command is issued, user must issue a resume command and check Q6 toggle bit status, before issue another erase command. The system can use the status register bits shown in the following table to determine the current state of the device:

Status	Q7	Q6	Q5	Q3	Q2	Q1	RY/BY#
Erase suspend read in erase suspended sector	1	No toggle	0	N/A	toggle	N/A	1
Erase suspend read in non-erase suspended sector	Data	Data	Data	Data	Data	Data	1
Erase suspend program in non-erase suspended sector	Q7#	Toggle	0	N/A	N/A	N/A	0

When the device has suspended erasing, user can execute the command sets, such as read silicon ID, sector protect verify, program, CFI query and erase resume.

After the device has entered Erase-Suspended Read Mode, Sector Erase, Chip Erase and Program Suspend commands are forbidden.

SECTOR ERASE RESUME

The sector Erase Resume command is valid only when the device is in Erase-Suspended Read mode. After erase resumes, the user can issue another Ease Suspend command, but there should be a 400us interval between Ease Resume and the next Erase Suspend command.

COMMAND OPERATIONS (cont'd)

PROGRAM SUSPEND/RESUME

After beginning a program operation, Program Suspend is the only valid command that may be issued. The system can determine if the device has entered the Program-Suspended Read mode through Q6 and RY/BY#.

After the device has entered Program-Suspended mode, the system can read any sector (s) except those being programmed by the suspended program operation. Reading the sector being program suspended is invalid. Whenever a suspend command is issued, user must issue a resume command and check Q6 toggle bit status, before issue another program command. The system can use the status register bits shown in the following table to determine the current state of the device:

Status	Q7	Q6	Q5	Q3	Q2	Q1	RY/BY#
Program suspend read in program suspended sector	Invalid						1
Program suspend read in non-program suspended sector	Data	Data	Data	Data	Data	Data	1

When the device has Program suspended, user can execute read array, auto-select, read CFI, read security silicon. Program and Erase Suspend commands are forbidden after the device entered Program-Suspend mode.

PROGRAM RESUME

The Program Resume command is valid only when the device is in Program-Suspended mode. After program resumes, the user can issue another Program Suspend command, but there should be a 5us interval between Program Resume and the next Program Suspend command.

BUFFER WRITE ABORT

Q1 is the indicator of Buffer Write Abort. When Q1=1, the device will abort from buffer write and go back to read status register shown as following table:

Status	Q7	Q6	Q5	Q3	Q2	Q1	RY/BY#
Buffer Write Busy	Q7#	Toggle	0	N/A	N/A	0	0
Buffer Write Abort	Q7#	Toggle	0	N/A	N/A	1	0
Buffer Write Exceeded Time Limit	Q7#	Toggle	1	N/A	N/A	0	0

COMMAND OPERATIONS (cont'd)

AUTOMATIC SELECT OPERATIONS

When the device is in Read mode, Program Suspended mode, Erase-Suspended Read mode, or CFI mode, the user can issue the Automatic Select command shown in *"TABLE 3. COMMAND DEFINITIONS"* (two unlock cycles followed by the Automatic Select command 90h) to enter Automatic Select mode. After entering Automatic Select mode, the user can query the Manufacturer ID, Device ID, Security Sector locked status, or Sector protected status multiple times without issuing a new Automatic Select command.

While In Automatic Select mode, issuing a Reset command (F0h) will return the device to Read mode (or Ease-Suspended Read mode if Erase-Suspend was active) or Program Suspended Read mode if Program Suspend was active.

Another way to enter Automatic Select mode is to use one of the bus operations shown in *"Table 2-2. BUS OPERATION"*. After the high voltage (Vhv) is removed from the A9 pin, the device will automatically return to Read mode or Erase-Suspended Read mode.

AUTOMATIC SELECT COMMAND SEQUENCE

Automatic Select mode is used to access the manufacturer ID, device ID and to verify whether or not secured silicon is locked and whether or not a sector is protected. The automatic select mode has four command cycles. The first two are unlock cycles, and followed by a specific command. The fourth cycle is a normal read cycle, and user can read at any address any number of times without entering another command sequence. The Reset command is necessary to exit the Automatic Select mode and back to read array.

After entering automatic select mode, no other commands are allowed except the reset command.

READ MANUFACTURER ID OR DEVICE ID

The Manufacturer ID (identification) is a unique hexadecimal number assigned to each manufacturer by the JEDEC committee. Each company has its own manufacturer ID, which is different from the ID of all other companies. The number assigned to Macronix is C2h.

After entering Automatic Select mode, performing a read operation with A1 & A0 held LOW will cause the device to output the Manufacturer ID on the Data I/O (Q7 to Q0) pins.

COMMAND OPERATIONS (cont'd)

RESET

In the following situations, executing reset command will reset device back to Read mode:

- Among erase command sequence (before the full command set is completed)
- Sector erase time-out period
- Erase fail (while Q5 is high)
- Among program command sequence (before the full command set is completed, erase-suspended program included)
- Program fail (while Q5 is high, and erase-suspended program fail is included)
- Auto-select mode
- CFI mode

While device is at the status of program fail or erase fail (Q5 is high), user must issue reset command to reset device back to read array mode. While the device is in Auto-Select mode or CFI mode, user must issue reset command to reset device back to read array mode.

When the device is in the progress of programming (not program fail) or erasing (not erase fail), device will ignore reset command.

ADVANCED SECTOR PROTECTION/UN-PROTECTION

There are two ways to implement software Advanced Sector Protection on this device: Password method or Solid methods. Through these two protection methods, user can disable or enable the programming or erasing operation to any individual sector or the whole chip. The figure below helps to describe an overview of these methods.

The device is default to the Solid mode. All sectors are default as unprotected when shipped from factory.
The detailed algorithm of advance sector protection is shown as follows:

Figure 1. Advance Sector Protection/Unprotection SPB Program Algorithm

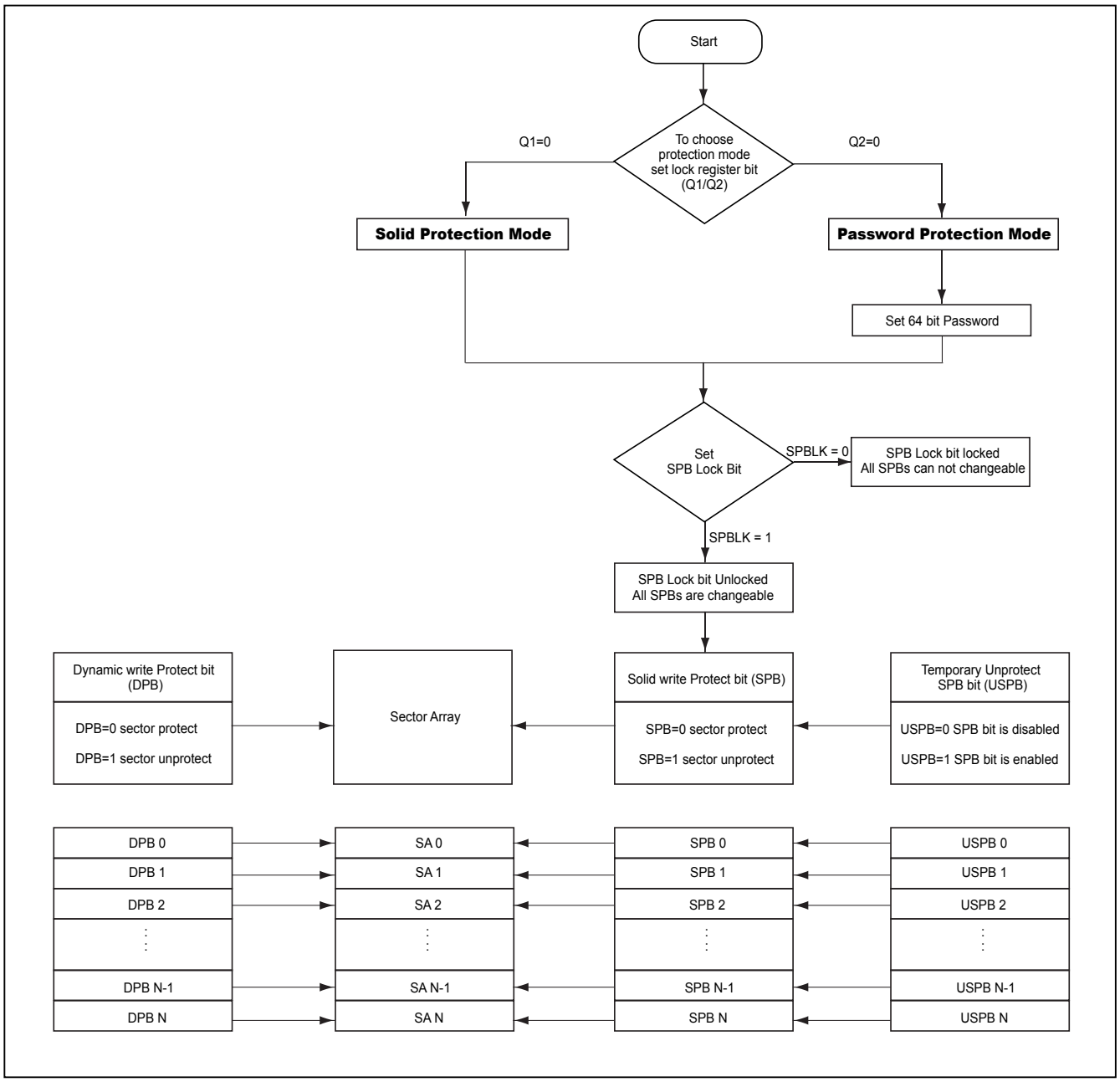

1. Lock Register

User can choose the sector protecting method via setting Lock Register bits as Q1 and Q2. Lock Register is a 16-bit one-time programmable register. Once programming either Q1 or Q2, they will be locked in that mode and the others will be disabled permanently. Q1 and Q2 can not be programmed at the same time, otherwise the device will abort the operation.

If users select Password Protection mode, the password setting is required. Users can set password by issuing password program command.

Lock Register bits

Q15-Q3	Q2	Q1	Q0
Don't care	Password Protection Mode Lock Bit	Solid Protection Mode Lock Bit	Secured Silicon Sector Protection Bit

Please refer to the command for Lock Register command set about how to read and program the Lock Register bits.

Figure 2. Lock Register Program Algorithm

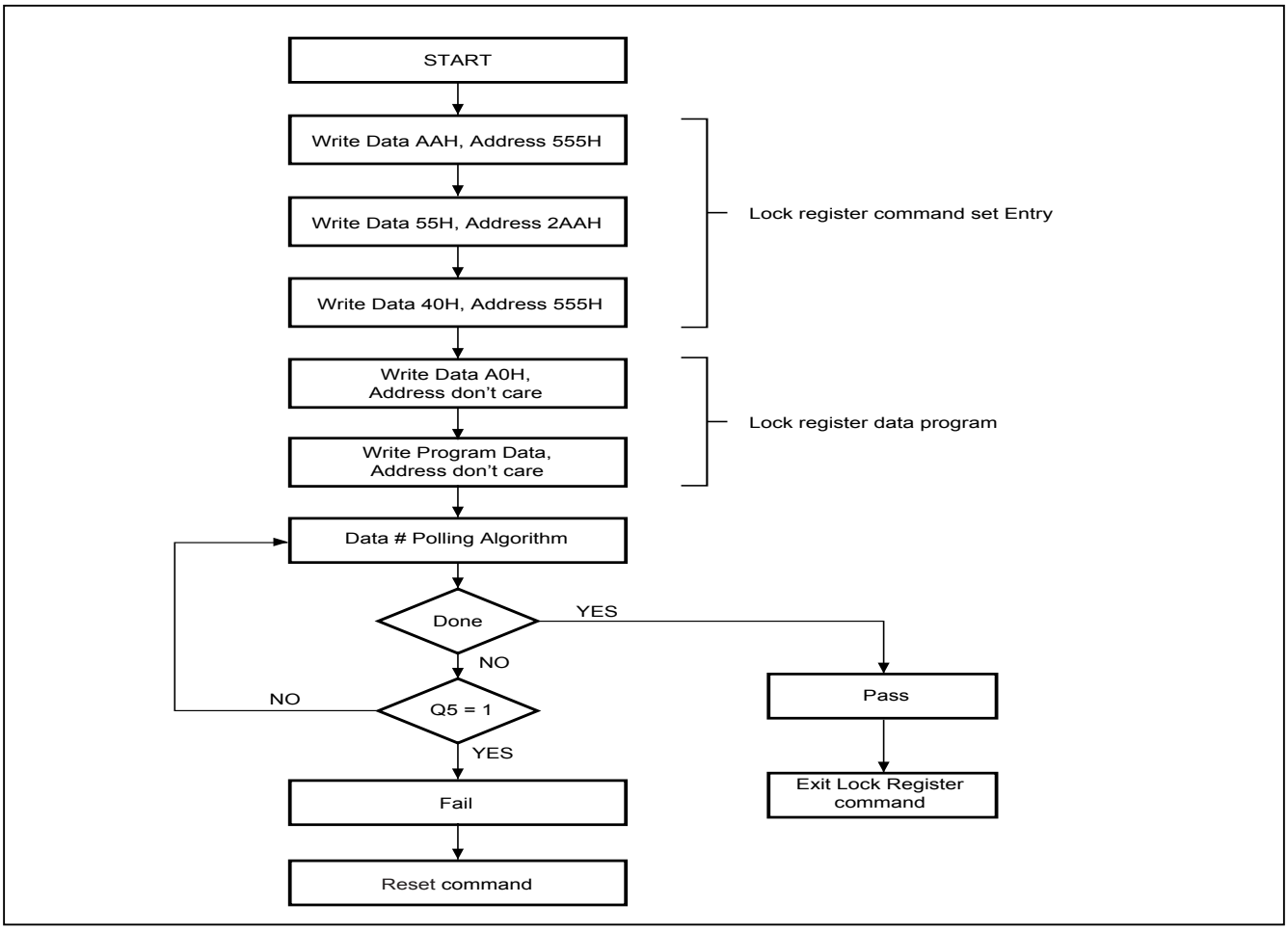

2. Solid Protection Mode

2.1 Solid write Protection Bits (SPB)

The Solid write Protection bits (SPB) are nonvolatile bit with the same endurances as the Flash memory. Each SPB is assigned to each sector individually. The SPB is preprogrammed, and verified prior to erasure are managed by the device, so system monitoring is not necessary.

When SPB is set to “0”, the associated sector may be protected, preventing any program or erase operation on this sector. Whether the sector is protected depends also upon the value of the USPB, as described elsewhere. The SPB bits are set individually by SPB program command. However, it cannot be cleared individually. Issuing the All SPB Erase command will erase all SPB in the same time. During SPB programming period, the read and write operations are disabled for normal sector until exiting this mode.

To unprotect a protected sector, the SPB lock bit must be cleared first by using a hardware reset or a power-up cycle. After the SPB lock bit is cleared, the SPB status can be changed to the desired settings. To lock the Solid Protection Bits after the modification has finished, the SPB Lock Bit must be set once again.

To verify the state of the SPB for a given sector, issuing a SPB Status Read Command to the device is required. Refer to the flow chart for details in Figure 3.

2.2 Dynamic write Protection Bits (DPB)

The Dynamic Protection features a volatile type protection to each individual sector. It can protect sectors from being unintentionally changed, and is easy to disable.

All Dynamic write Protection bit (DPB) can be modified individually. DPBs protect the unprotected sectors with their SPBs cleared. To modify the DPB status by issuing the DPB Set (programmed to “0”) or DPB Clear (erased to “1”) commands, and place each sector in the protected or unprotected state seperately. After the DPB Clear command is issued (erased to “1”), the sector may be modified depending on the SPB state of that sector.

The DPBs are default to be erased to “1” when first shipped from factory.

2.3 Temporary Un-protect Solid write Protect Bits (USPB)

Temporary Un-protect Solid write Protect Bits are volatile. They are unique for each sector and can be individually modified. Software can temporarily unprotect write protect sectors despite of SPB's property when DPBs are cleared. While the USPB is set (to “0”), the corresponding sector's SPB property is masked.

Notes:
1. Upon power up, the USPBs are cleared (all “1”). The USPBs can be set (to “0”) or cleared (to “1”) as often as needed. The hardware reset will reset USPB/DPB to their default values.
2. To change the protected sector status of solid write protect bit, users don't need to clear all SPBs. The users can just implement software to set corresponding USPB to "0", in which the corresponding DPB status is cleared too. Consequently, the original solid write protect status of protected sectors can be temporarily changed.

Figure 3. SPB Program Algorithm

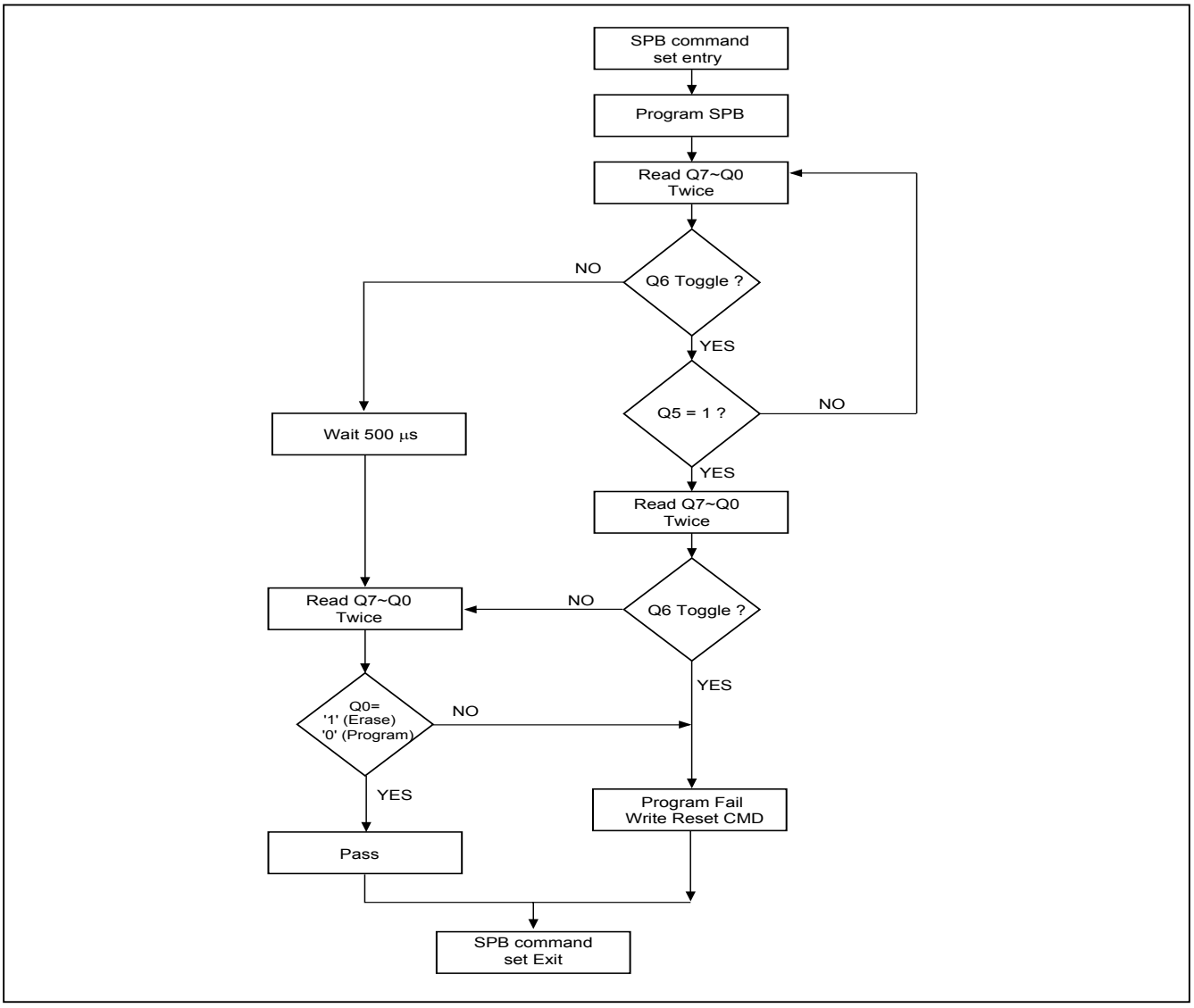

Note: SPB program/erase status polling flowchart: check Q6 toggle, when Q6 stop toggle, the read status is 00H /01H (00H for program/ 01H for erase), otherwise, the status is “fail” and “exit”.

3. Solid Protection Bit Lock Bit

The Solid Protection Bit Lock Bit (SPBLK) is assigned to control all SPB status. It is an unique and volatile. When SPBLK=0 (set), all SPBs are locked and can not be changed. When SPBLK=1 (cleared), all SPBs are allowed to be changed.

There is no software command sequence requested to unlock this bit, unless the device is in the password protection mode. To clear the SPB Lock Bit, just execute a hardware reset or a power-up cycle. In order to prevent modification, the SPB Lock Bit must be set (SPBLK=0) after all SPBs are set to desired status.

4. Password Protection Method

The security level of Password Protection Method is higher than the Solid protection mode. The 64 bit password is requested before modifying SPB lock bit status. When device is under password protection mode, the SPB lock bit is set as “0”, after a power-up cycle or Reset Command.

A correct password is required for password Unlock command to unlock the SPB lock bit. Await 2us is necessary to unlock the device after a valid password is given. After that, the SPB bits are allowed to be changed. The Password Unlock command is issued slower than 2 μs every time, to prevent hacker from trying all the 64-bit password combinations.

There are a few steps to start password protection mode:
(1). Set a 64-bit password for verification before entering the password protection mode. This verification is only allowed in password programming.
(2). Set the Password Protection Mode Lock Bit to”0” to activate the password protection mode.

Once the password protection mode lock bit is programmed, the programmed Q2 bit can not be erased any more and the device will remain permanently in password protection mode. The previous set 64-bit password can not be retrieved or programmed. All the commands to the password-protected address will also be disabled.

All the combinations of the 64-bit password can be used as a password, and programming the password does not require special address. The password is defaulted to be all “1” when shipped from the factory. Under password program command, only "0" can be programmed. In order to prevent access, the Password Mode Locking Bit must be set after the Password is programmed and verified. To set the Password Mode Lock Bit will prevent this 64-bits password to be read on the data bus. Any modification is impossible then, and the password can not be checked anymore after the Password Mode Lock Bit is set.

Sector Protection Status Table

Protection Bit Status			Sector Status
DPB	SPB	USPB	
clear	clear	clear	Unprotect
clear	clear	set	Unprotect
clear	set	clear	Protect
clear	set	set	Unprotect
set	clear	clear	Protect
set	clear	set	Protect
set	set	clear	Protect
set	set	set	Protect

Notes: If SPBLK is set, SPB will be unchangeable.
If SPBLK is cleared, SPB will be changeable.

SECURITY SECTOR FLASH MEMORY REGION

The Security Sector region is an extra OTP memory space of 128 words in length. The security sector can be locked upon shipping from factory, or it can be locked by customer after shipping. Customer can issue Security Sector Factory Protect Verify and/or Security Sector Protect Verify to query the lock status of the device. After enter Security Sector region, it is forbidden to enter Lock Register, DPB, SPB, SPB lock region.

In factory-locked device, security sector region is protected when shipped from factory and the security silicon sector indicator bit is set to "1". In customer lockable device, security sector region is unprotected when shipped from factory and the security silicon indicator bit is set to "0".

FACTORY LOCKED: SECURITY SECTOR PROGRAMMED AND PROTECTED AT THE FACTORY

In a factory locked device, the Security Sector is permanently locked before shipping from the factory. The device will have a 16-byte (8-word) ESN in the security region. The ESN occupies addresses 00000h to 0000Fh in byte mode or 00000h to 00007h in word mode.

Secured Silicon Sector Address Range	Standard Factory Locked	Express Flash Factory Locked	Customer Lockable
000000h-000007h	ESN	ESN or Determined by Customer	Determined by Customer
000008h-00007Fh	Unavailable	Determined by Customer	

CUSTOMER LOCKABLE: SECURITY SECTOR NOT PROGRAMMED OR PROTECTED AT THE FACTORY

When the security feature is not required, the security region can act as an extra memory space.

Security silicon sector can also be protected by two methods. Note that once the security silicon sector is protected, there is no way to unprotect the security silicon sector and the content of it can no longer be altered.

After the security silicon is locked and verified, system must write Exit Security Sector Region, go through a power cycle, or issue a hardware reset to return the device to read normal array mode.

TABLE 3. COMMAND DEFINITIONS

Comm-and		Read Mode	Reset Mode	Automatic Select								Security Sector Region		Exit Security Sector	
				Silicon ID		Device ID		Factory Protect Verify		Sector Protect Verify					
				Word	Byte	Word	Byte	Word	Byte	Word	Byte	Word	Byte	Word	Byte
1st Bus Cycle	Addr	Addr	XXX	555	AAA	555	AAA	555	AAA	555	AAA	555	AAA	555	AAA
	Data	Data	F0	AA	AA	AA	AA	AA	AA	AA	AA	AA	AA	AA	AA
2nd Bus Cycle	Addr			2AA	555	2AA	555	2AA	555	2AA	555	2AA	555	2AA	555
	Data			55	55	55	55	55	55	55	55	55	55	55	55
3rd Bus Cycle	Addr			555	AAA	555	AAA	555	AAA	555	AAA	555	AAA	555	AAA
	Data			90	90	90	90	90	90	90	90	88	88	90	90
4th Bus Cycle	Addr			X00	X00	X01	X02	X03	X06	(Sector) X02	(Sector) X04			XXX	XXX
	Data			C2h	C2h	ID1	ID1	99/19(H) 89/09(L)		00/01	00/01			00	00
5th Bus Cycle	Addr					X0E	X1C								
	Data					ID2	ID2								
6th Bus Cycle	Addr					X0F	X1E								
	Data					ID3	ID3								

Comm-and		Program		Write to Buffer Program		Write to Buffer Program Abort Reset		Write to Buffer Program confirm		Chip Erase		Sector Erase		CFI Read		Program/ Erase Suspend		Program/ Erase Resume	
		Word	Byte	Word	Byte	Word	Byte	Word	Byte	Word	Byte	Word	Byte	Word	Byte	Word	Byte	Word	Byte
1st Bus Cycle	Addr	555	AAA	555	AAA	555	AAA	SA	SA	555	AAA	555	AAA	55	AA	xxx	xxx	xxx	xxx
	Data	AA	AA	AA	AA	AA	AA	29	29	AA	AA	AA	AA	98	98	B0	B0	30	30
2nd Bus Cycle	Addr	2AA	555	2AA	555	2AA	555			2AA	555	2AA	555						
	Data	55	55	55	55	55	55			55	55	55	55						
3rd Bus Cycle	Addr	555	AAA	SA	SA	555	AAA			555	AAA	555	AAA						
	Data	A0	A0	25	25	F0	F0			80	80	80	80						
4th Bus Cycle	Addr	Addr	Addr	SA	SA					555	AAA	555	AAA						
	Data	Data	Data	N-1	N-1					AA	AA	AA	AA						
5th Bus Cycle	Addr			WA	WA					2AA	555	2AA	555						
	Data			WD	WD					55	55	55	55						
6th Bus Cycle	Addr			WBL	WBL					555	AAA	Sec-tor	Sec-tor						
	Data			WD	WD					10	10	30	30						

WA= Write Address
WD= Write Data
SA= Sector Address
N-1= Word Count
WBL= Write Buffer Location
PWD= Password
PWDn=Password word 0, word 1, word n
ID1/ID2/ID3: Refer to *"Table 2-2. BUS OPERATION"* for detail ID.

Command		Deep Power Down				Password Protection									
		Enter		Exit		Password Command Set Entry		Password Program		Password Read		Password Unlock		Password Command Set Exit	
		Word	Byte	Word	Byte	Word	Byte	Word	Byte	Word	Byte	Word	Byte	Word	Byte
1st Bus Cycle	Addr	555	AAA	XXX	XXX	555	AAA	XXX	XXX	X00	X00	00	00	XXX	XXX
	Data	AA	AA	AB	AB	AA	AA	A0	A0	PWD0	PWD0	25	25	90	90
2nd Bus Cycle	Addr	2AA	555			2AA	555	PWA	PWA	X01	X01	00	00	XXX	XXX
	Data	55	55			55	55	PWD	PWD	PWD1	PWD1	03	03	00	00
3rd Bus Cycle	Addr	XXX	XXX			555	AAA			X02	X02	X00	X00		
	Data	B9	B9			60	60			PWD2	PWD2	PWD0	PWD0		
4th Bus Cycle	Addr									X03	X03	X01	X01		
	Data									PWD3	PWD3	PWD1	PWD1		
5th Bus Cycle	Addr										X04	X02	X02		
	Data										PWD4	PWD2	PWD2		
6th Bus Cycle	Addr										X05	X03	X03		
	Data										PWD5	PWD3	PWD3		
7th Bus Cycle	Addr										X06	00	X04		
	Data										PWD6	29	PWD4		
8th Bus Cycle	Addr										X07		X05		
	Data										PWD7		PWD5		
9th Bus Cycle	Addr												X06		
	Data												PWD6		
10th Bus Cycle	Addr												X07		
	Data												PWD7		
11th Bus Cycle	Addr												00		
	Data												29		

Command		Lock Register								Global Non-Volatile							
		Lock register Command Set Entry		Program		Read		Lock register Command Set Exit		SPB Command Set Entry		SPB Program		All SPB Erase		SPB Status Read	
		Word	Byte	Word	Byte	Word	Byte	Word	Byte	Word	Byte	Word	Byte	Word	Byte	Word	Byte
1st Bus Cycle	Addr	555	AAA	XXX	XXX	XXX	XXX	XXX	XXX	555	AAA	XXX	XXX	XXX	XXX	SA	SA
	Data	AA	AA	A0	A0	DATA	DATA	90	90	AA	AA	A0	A0	80	80	00/01	00/01
2nd Bus Cycle	Addr	2AA	555	XXX	XXX			XXX	XXX	2AA	555	SA	SA	00	00		
	Data	55	55	Data	Data			00	00	55	55	00	00	30	30		
3rd Bus Cycle	Addr	555	AAA							555	AAA						
	Data	40	40							C0	C0						
4th Bus Cycle	Addr																
	Data																
5th Bus Cycle	Addr																
	Data																

Command		Global Non-Volatile		Global Volatile Freeze								Volatile					
		SPB Command Set Exit		SPB Lock Command Set Entry		SPB Lock Set		SPB Lock Status Read		SPB Lock Command Set Exit		DPB Command Set Entry		DPB Set		DPB Clear	
		Word	Byte	Word	Byte	Word	Byte	Word	Byte	Word	Byte	Word	Byte	Word	Byte	Word	Byte
1st Bus Cycle	Addr	XXX	XXX	555	AAA	XXX	XXX	XXX	XXX	XXX	XXX	555	AAA	XXX	XXX	XXX	XXX
	Data	90	90	AA	AA	A0	A0	00/01	00/01	90	90	AA	AA	A0	A0	A0	A0
2nd Bus Cycle	Addr	XXX	XXX	2AA	555	XXX	XXX			XXX	XXX	2AA	555	SA	SA	SA	SA
	Data	00	00	55	55	00	00			00	00	55	55	00	00	01	01
3rd Bus Cycle	Addr			555	AAA							555	AAA				
	Data			50	50							E0	E0				
4th Bus Cycle	Addr																
	Data																
5th Bus Cycle	Addr																
	Data																

Command		Volatile			
		DPB Status Read		DPB Command Set Exit	
		Word	Byte	Word	Byte
1st Bus Cycle	Addr	SA	SA	XXX	XXX
	Data	00/01	00/01	90	90
2nd Bus Cycle	Addr			XXX	XXX
	Data			00	00
3rd Bus Cycle	Addr				
	Data				
4th Bus Cycle	Addr				
	Data				
5th Bus Cycle	Addr				
	Data				

Notes:
* It is not recommended to adopt any other code not in the command definition table which will potentially enter the hidden mode.
* For the SPB Lock and DPB Status Read "00" means lock (protect), "01" means unlock (unprotect).

COMMON FLASH MEMORY INTERFACE (CFI) MODE

QUERY COMMAND AND COMMAND FLASH MEMORY INTERFACE (CFI) MODE

The device features CFI mode. Host system can retrieve the operating characteristics, structure and vendor-specified information such as identifying information, memory size, byte/word configuration, operating voltages and timing information of this device by CFI mode. If the system writes the CFI Query command "98h", to address "55h"/"AAh" (depending on Word/Byte mode), the device will enter the CFI Query Mode, any time the device is ready to read array data. The system can read CFI information at the addresses given in Table 4.

Once user enters CFI query mode, user can issue reset command to exit CFI mode and return to read array mode. The CFI unused area is reserved by Macronix.

Table 4-1. CFI mode: Identification Data Values (Note 1)
(All values in these tables are in hexadecimal)

Description	Address (h) (Word Mode)	Address (h) (Byte Mode)	Data (h)
Query-unique ASCII string "QRY"	10	20	0051
	11	22	0052
	12	24	0059
Primary vendor command set and control interface ID code	13	26	0002
	14	28	0000
Address for primary algorithm extended query table	15	2A	0040
	16	2C	0000
Alternate vendor command set and control interface ID code	17	2E	0000
	18	30	0000
Address for alternate algorithm extended query table	19	32	0000
	1A	34	0000

Note 1. Query data are always presented on the lowest data output Q7~Q0 only, Q8~Q15 are "0".

Table 4-2. CFI mode: System Interface Data Values

Description	Address (h) (Word Mode)	Address (h) (Byte Mode)	Data (h)
Vcc supply minimum program/erase voltage	1B	36	0027
Vcc supply maximum program/erase voltage	1C	38	0036
VPP supply minimum program/erase voltage	1D	3A	0000
VPP supply maximum program/erase voltage	1E	3C	0000
Typical timeout per single word/byte write, 2^n us	1F	3E	0003
Typical timeout for maximum-size buffer write, 2^n us (00h, not support)	20	40	0006
Typical timeout per individual block erase, 2^n ms	21	42	0009
Typical timeout for full chip erase, 2^n ms (00h, not support)	22	44	0013
Maximum timeout for word/byte write, 2^n times typical	23	46	0003
Maximum timeout for buffer write, 2^n times typical	24	48	0005
Maximum timeout per individual block erase, 2^n times typical	25	4A	0003
Maximum timeout for chip erase, 2^n times typical (00h, not support)	26	4C	0002

Table 4-3. CFI mode: Device Geometry Data Values

Description	Address (h) (Word Mode)	Address (h) (Byte Mode)	Data (h)
Device size = 2^n in number of bytes (1A=512Mb)	27	4E	001A
Flash device interface description (02=asynchronous x8/x16)	28	50	0002
	29	52	0000
Maximum number of bytes in buffer write = 2^n (00h, not support)	2A	54	0006
	2B	56	0000
Number of erase regions within device (01h:uniform, 02h:boot)	2C	58	0001
Index for Erase Bank Area 1: [2E,2D] = # of same-size sectors in region 1-1 [30, 2F] = sector size in multiples of 256 bytes	2D	5A	00FF
	2E	5C	0001
	2F	5E	0000
	30	60	0002
Index for Erase Bank Area 2	31	62	0000
	32	64	0000
	33	66	0000
	34	68	0000
Index for Erase Bank Area 3	35	6A	0000
	36	6C	0000
	37	6E	0000
	38	70	0000
Index for Erase Bank Area 4	39	72	0000
	3A	74	0000
	3B	76	0000
	3C	78	0000

Table 4-4. CFI mode: Primary Vendor-Specific Extended Query Data Values

Description	Address (h) (Word Mode)	Address (h) (Byte Mode)	Data (h)
Query - Primary extended table, unique ASCII string, PRI	40	80	0050
	41	82	0052
	42	84	0049
Major version number, ASCII	43	86	0031
Minor version number, ASCII	44	88	0033
Unlock recognizes address (0= recognize, 1= don't recognize)	45	8A	0014
Erase suspend (2= to both read and program)	46	8C	0002
Sector protect (N= # of sectors/group)	47	8E	0001
Temporary sector unprotect (1=supported)	48	90	0000
Sector protect/Chip unprotect scheme	49	92	0008
Simultaneous R/W operation (0=not supported)	4A	94	0000
Burst mode (0=not supported)	4B	96	0000
Page mode (0=not supported, 01 = 4 word page, 02 = 8 word page)	4C	98	0002
Minimum ACC(acceleration) supply (0= not supported), [D7:D4] for volt, [D3:D0] for 100mV	4D	9A	0095
Maximum ACC(acceleration) supply (0= not supported), [D7:D4] for volt, [D3:D0] for 100mV	4E	9C	00A5
WP# Protection 04=Uniform sectors bottom WP# protect 05=Uniform sectors top WP# protect	4F	9E	0004/ 0005
Program Suspend (0=not supported, 1=supported)	50	A0	0001

ELECTRICAL CHARACTERISTICS

ABSOLUTE MAXIMUM STRESS RATINGS

Storage Temperature		-65°C to +150°C
Voltage Range	VCC	-0.5V to +4.0V
	VI/O	-0.5V to +4.0V
	A9 , WP#/ACC	-0.5V to +10.5V
	The other pins.	-0.5V to Vcc +0.5V
Output Short Circuit Current (less than one second)		200 mA

OPERATING TEMPERATURE AND VOLTAGE

Industrial (I) Grade	Surrounding Temperature (T_A)	-40°C to +85°C
VCC Supply Voltages	Full VCC range	+2.7V to 3.6V
	Regulated VCC range	+3.0V to 3.6V
	VI/O range	+1.65V to 3.6V

NOTICE:
1. Stresses greater than those listed under ABSOLUTE MAXIMUM RATINGS may cause permanent damage to the device. This is stress rating only and functional operational sections of this specification is not implied. Exposure to absolute maximum rating conditions for extended period may affect reliability.
2. Specifications contained within the following tables are subject to change.
3. During voltage transitions, all pins may overshoot GND to -2.0V and Vcc to +2.0V for periods up to 20ns, see below Figure.

Maximum Negative Overshoot Waveform

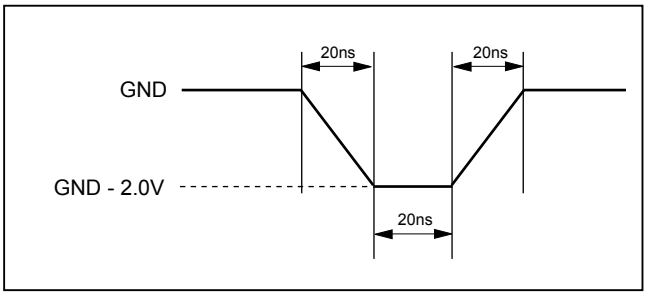

Maximum Positive Overshoot Waveform

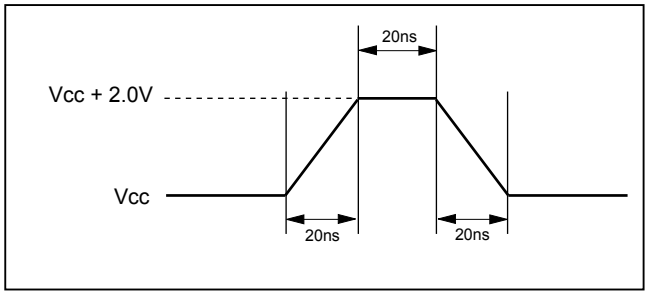

DC CHARACTERISTICS

Symbol	Description	Min.	Typ.	Max.	Remark
Iilk	Input Leak			±4.0uA	
Iilk9	A9 Leak			70uA	A9=10.5V
Iolk	Output Leak			±1.0uA	
Icr1	Read Current		5mA	15mA	CE#=Vil, OE#=Vih, VCC=VCCmax; f=1MHz
			10mA	20mA	CE#=Vil, OE#=Vih, VCC=VCCmax; f=5MHz
			15mA	30mA	CE#=Vil, OE#=Vih, VCC=VCCmax; f=10MHz
Icr2	VCC Page Read Current		2mA	8mA	CE#=Vil, OE#=Vih, VCC=VCCmax; f=10MHz
			4mA	15mA	CE#=Vil, OE#=Vih, VCC=VCCmax; f=33MHz
Iio	VI/O non-active current		0.2mA	10mA	
Icw	Write Current		14mA	30mA	CE#=Vil, OE#=Vih
Isb	Standby Current		40uA	100uA	VCC=VCCmax, other pin disable
Isbr	Reset Current		40uA	100uA	VCC=VCCmax, RESET# enable, other pin disable
Isbs	Sleep Mode Current		40uA	100uA	
Idpd	Vcc deep power down current		2uA	20uA	
Icp1	Accelerated Pgm Current, WP#/Acc pin(Word/Byte)		1.5mA	4mA	CE#=Vil, OE#=Vih
Icp2	Accelerated Pgm Current, Vcc pin, (Word/Byte)		14mA	28mA	CE#=Vil, OE#=Vih
Vil	Input Low Voltage	-0.1V		0.3xVI/O	
Vih	Input High Voltage	0.7xVI/O		VI/O+0.3V	
Vhv	Very High Voltage for Auto Select/ Accelerated Program	9.5V		10.5V	
Vol	Output Low Voltage			0.45V	Iol=100uA
Voh	Ouput High Voltage	0.85xVI/O			Ioh=-100uA
Vlko	Low Vcc Lock-out voltage	2.1V		2.4V	

Note: Sleep mode enables the lower power when address remain stable for taa+30ns.

SWITCHING TEST CIRCUITS

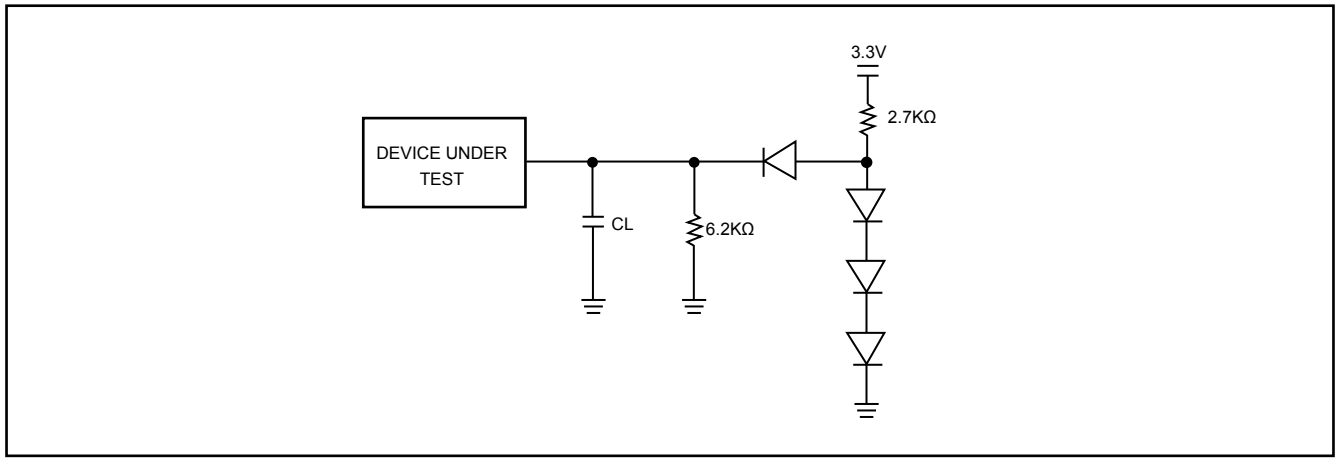

Test Condition
Output Load Capacitance, CL : 1TTL gate, 30pF
Rise/Fall Times : 5ns
Input Pulse levels :0.0 ~ VI/O
In/Out reference levels :0.5VI/O

SWITCHING TEST WAVEFORMS

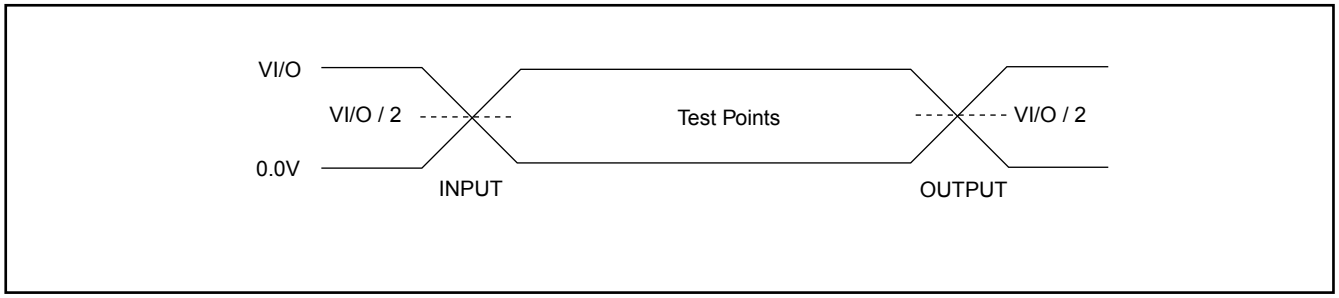

AC CHARACTERISTICS

Symbol	Description		(VCC=2.7V~3.6V)			(VCC=3.0V~3.6V)			Unit
			Min.	Typ.	Max.	Min.	Typ.	Max.	
Taa	Valid data output after address	VI/O=VCC			110			100	ns
		VI/O=1.65 to VCC			110/120			110/120	ns
Tpa	Page access time	VI/O=VCC			25			25	ns
		VI/O=1.65 to VCC			30			30	ns
Tce	Valid data output after CE# low	VI/O=VCC			110			100	ns
		VI/O=1.65 to VCC			110/120			110/120	ns
Toe	Valid data output after OE# low	VI/O=VCC			25			25	ns
		VI/O=1.65 to VCC			30			30	ns
Tdf	Data output floating after OE# high or CE# high				20			20	ns
Tsrw	Latency between read and write operation (Note)		35			35			ns
Toh	Output hold time from the earliest rising edge of address, CE#, OE#		0			0			ns
Trc	Read period time	VI/O=VCC	110			100			ns
		VI/O=1.65 to VCC	110/120			110/120			ns
Twc	Write period time	VI/O=VCC	110			100			ns
		VI/O=1.65 to VCC	110/120			110/120			ns
Tcwc	Command write period time	VI/O=VCC	110			100			ns
		VI/O=1.65 to VCC	110/120			110/120			ns
Tas	Address setup time		0			0			ns
Taso	Address setup time to OE# low during toggle bit polling		15			15			ns
Tah	Address hold time		45			45			ns
Taht	Address hold time from CE# or OE# high during toggle bit polling		0			0			ns
Tds	Data setup time		30			30			ns
Tdh	Data hold time		0			0			ns
Tvcs	Vcc setup time		500			500			us
Tcs	Chip enable Setup time		0			0			ns
Tch	Chip enable hold time		0			0			ns
Toes	Output enable setup time		0			0			ns
Toeh	Output enable hold time	Read	0			0			ns
		Toggle & Data# Polling	10			10			ns
Tws	WE# setup time		0			0			ns
Twh	WE# hold time		0			0			ns
Tcepw	CE# pulse width		35			35			ns
Tcepwh	CE# pulse width high		30			30			ns

Symbol	Description		(VCC=2.7V~3.6V)			(VCC=3.0V~3.6V)			Unit
			Min.	Typ.	Max.	Min.	Typ.	Max.	
Twp	WE# pulse width		35			35			ns
Twph	WE# pulse width high		30			30			ns
Tbusy	Program/Erase active time by RY/BY#	VI/O=VCC			110			100	ns
		VI/O=1.65 to VCC			110/ 120			110/ 120	ns
Tghwl	Read recover time before write		0			0			ns
Tghel	Read recover time before write		0			0			ns
Twhwh1	Program operation	Byte		10			10		us
		Word		10			10		us
Twhwh1	Acc program operation (Word/Byte)			10			10		us
Twhwh2	Sector erase operation			0.5	3.5		0.5	3.5	sec
Tbal	Sector add hold time				50			50	us
Trdp	Release from deep power down mode				200			200	us

Note : Not 100% tested.

WRITE COMMAND OPERATION

Figure 4. COMMAND WRITE OPERATION

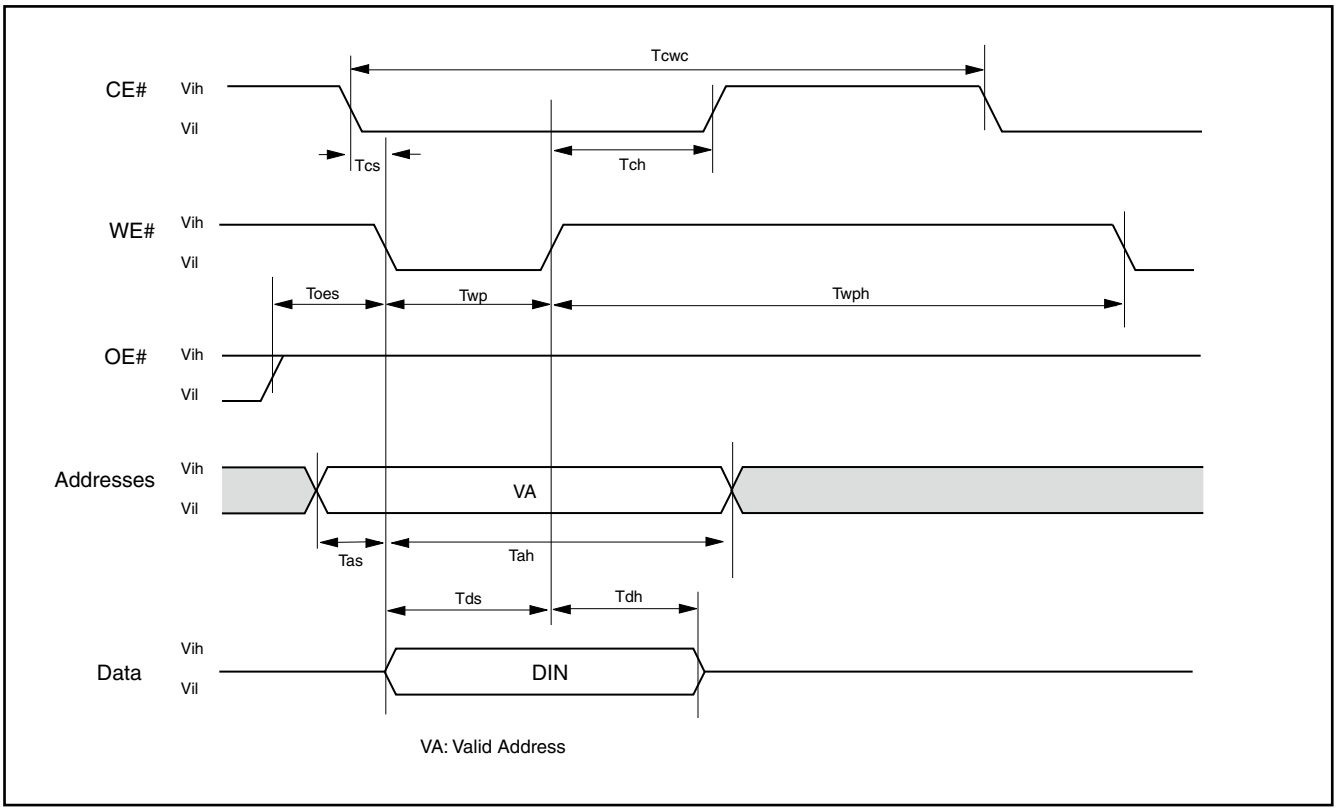

READ/RESET OPERATION

Figure 5. READ TIMING WAVEFORMS

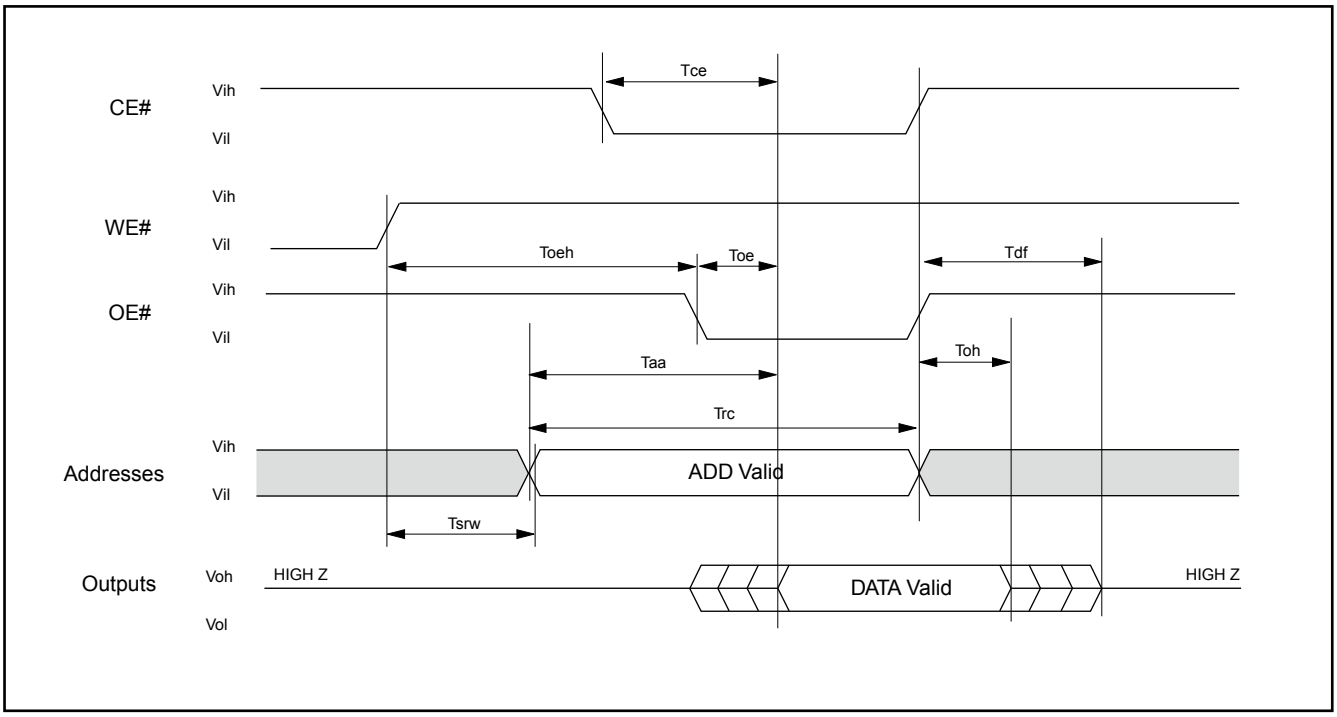

AC CHARACTERISTICS

Item	Description	Setup	Speed	Unit
Trp1	RESET# Pulse Width (During Automatic Algorithms)	MIN	10	us
Trp2	RESET# Pulse Width (NOT During Automatic Algorithms)	MIN	500	ns
Trh	RESET# High Time Before Read	MIN	200	ns
Trb1	RY/BY# Recovery Time (to CE#, OE# go low)	MIN	0	ns
Trb2	RY/BY# Recovery Time (to WE# go low)	MIN	50	ns
Tready1	RESET# PIN Low (During Automatic Algorithms) to Read or Write	MAX	20	us
Tready2	RESET# PIN Low (NOT During Automatic Algorithms) to Read or Write	MAX	500	ns

Figure 6. RESET# TIMING WAVEFORM

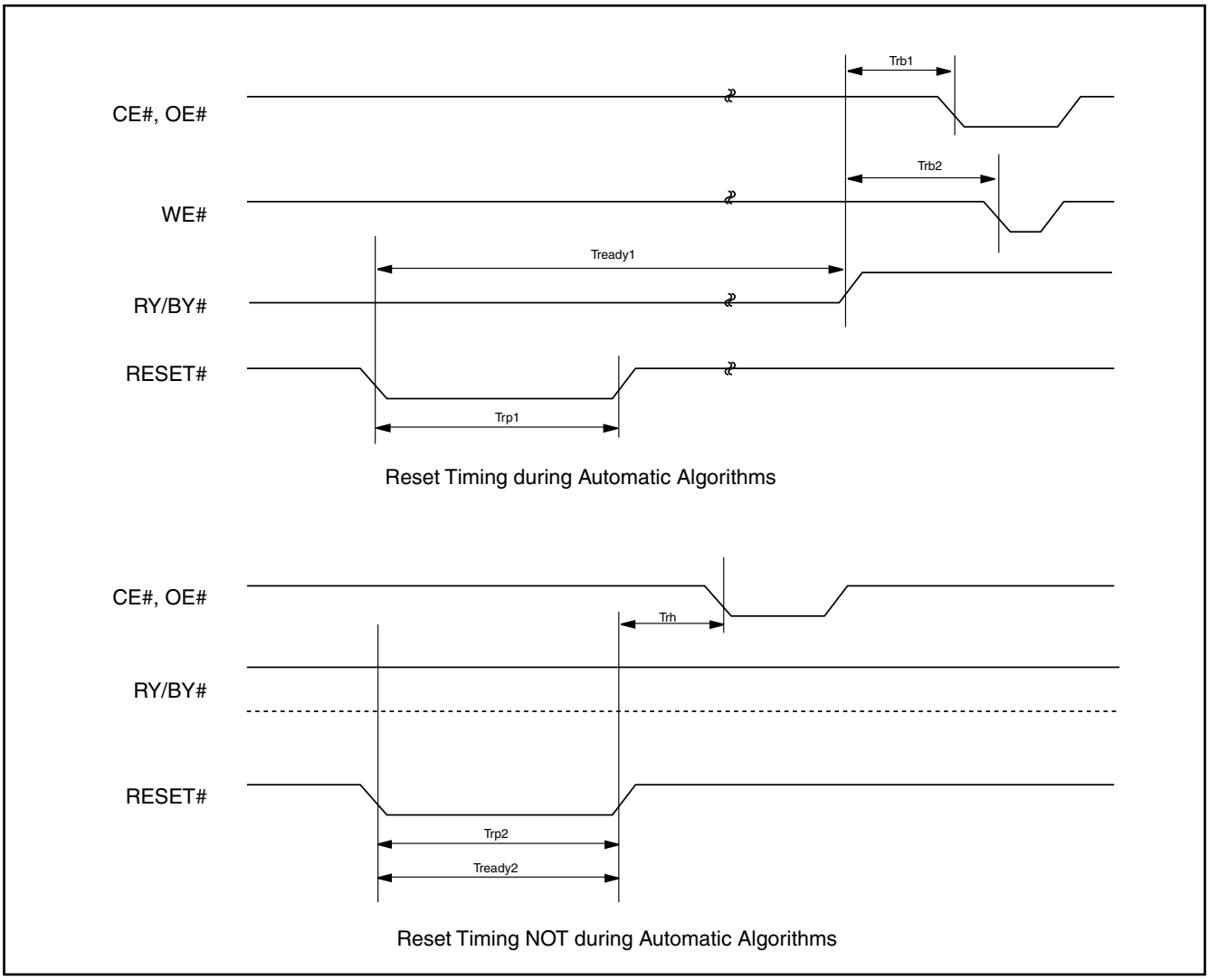

ERASE/PROGRAM OPERATION

Figure 7. AUTOMATIC CHIP ERASE TIMING WAVEFORM

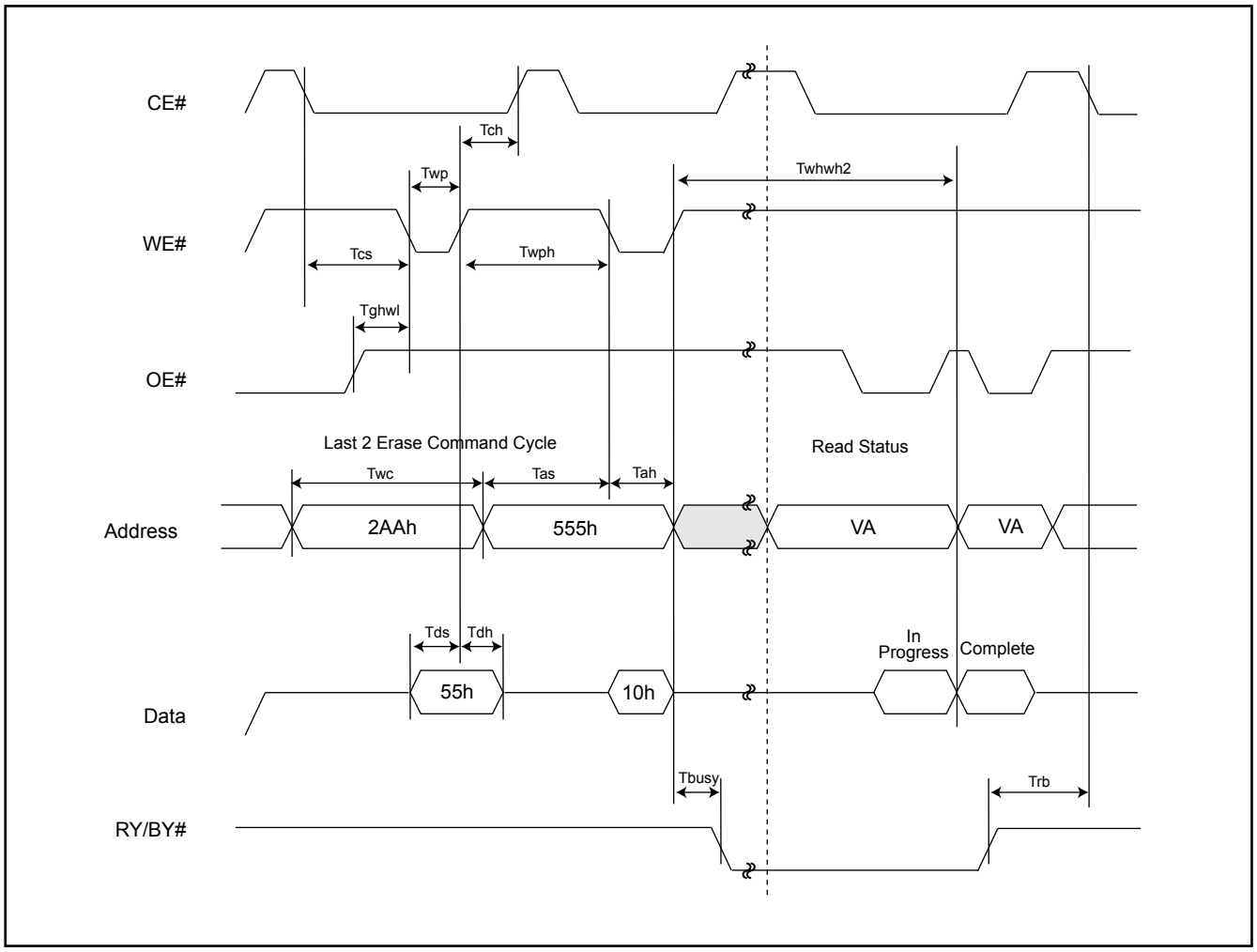

Figure 8. AUTOMATIC CHIP ERASE ALGORITHM FLOWCHART

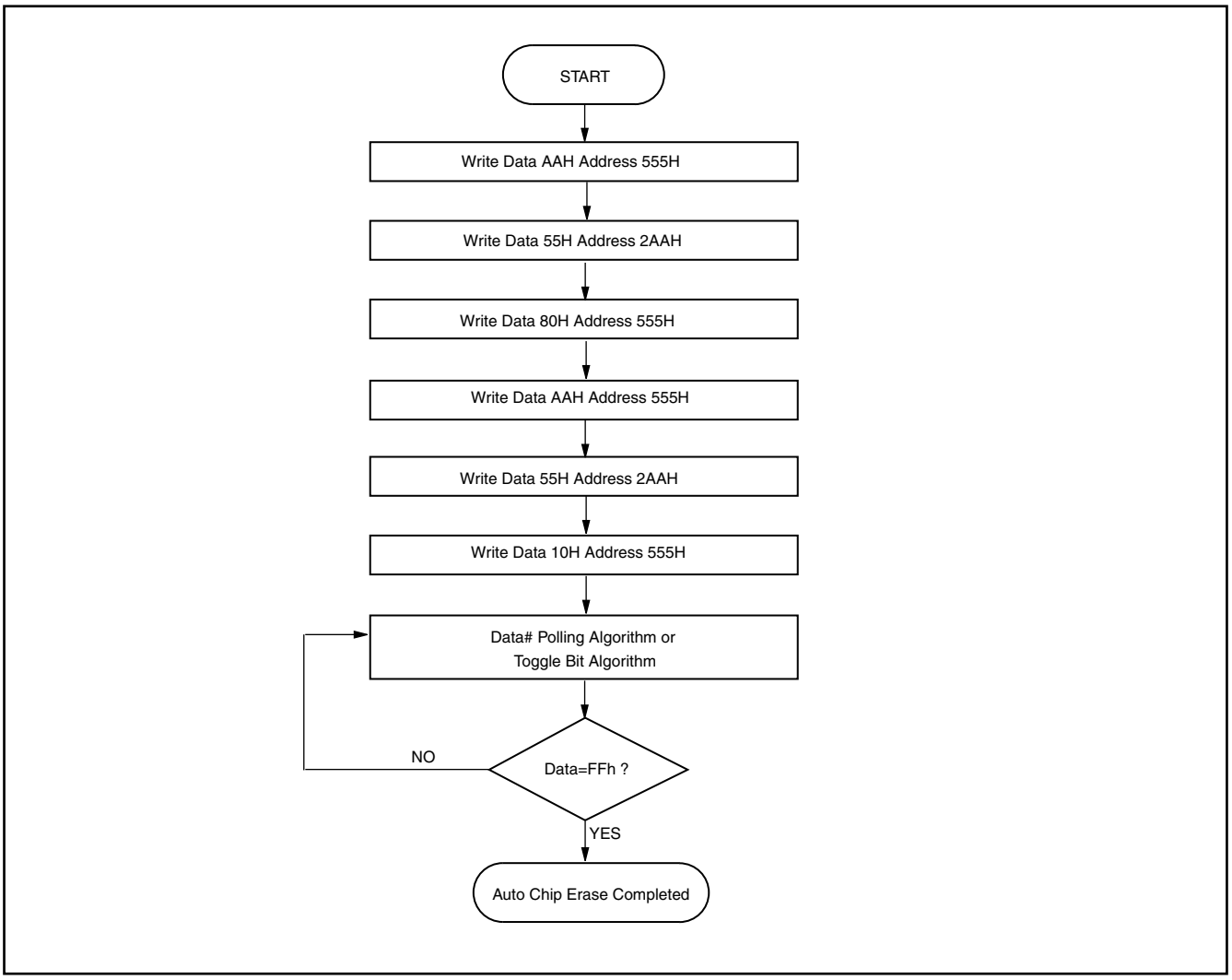

Figure 9. AUTOMATIC SECTOR ERASE TIMING WAVEFORM

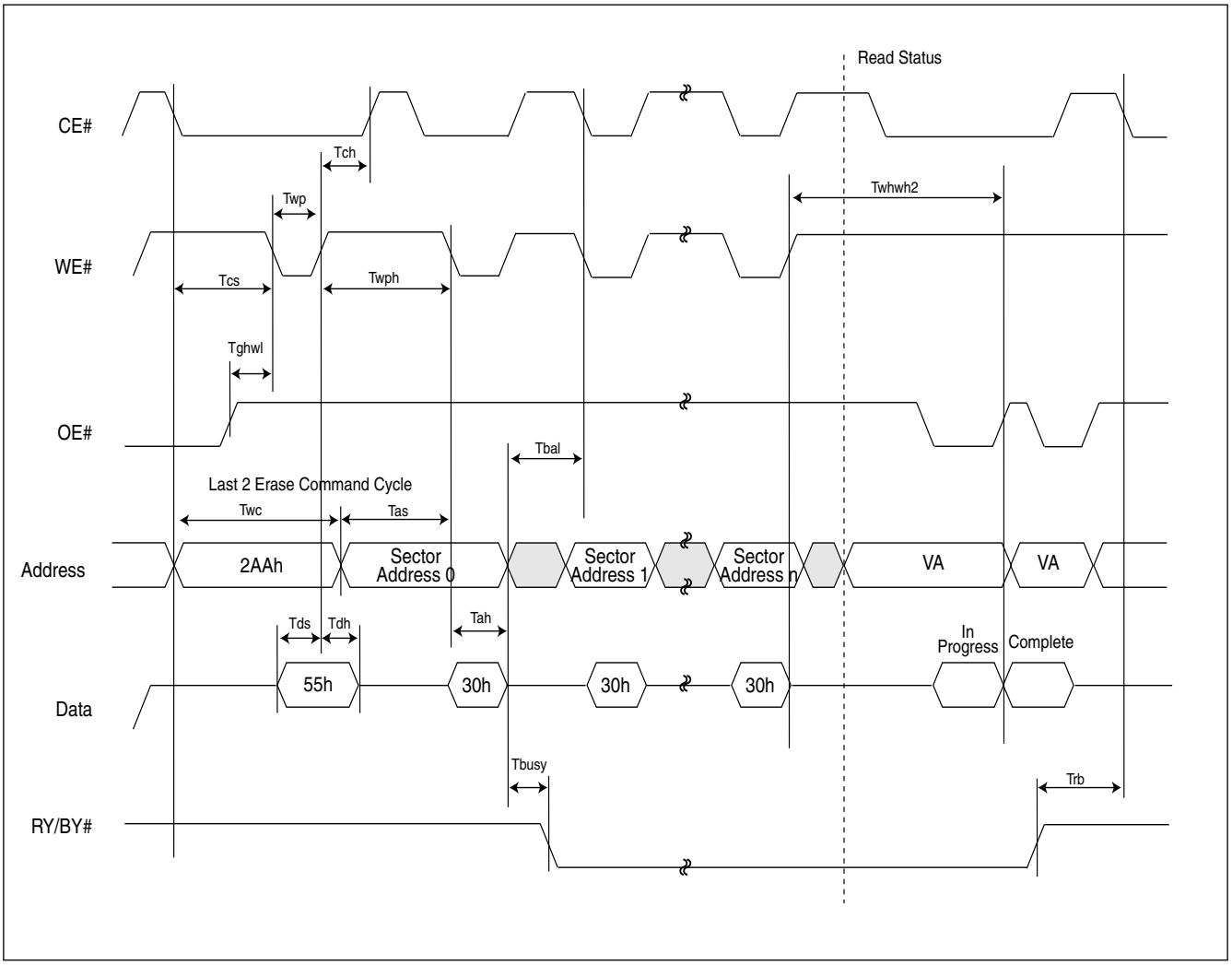

Figure 10. AUTOMATIC SECTOR ERASE ALGORITHM FLOWCHART

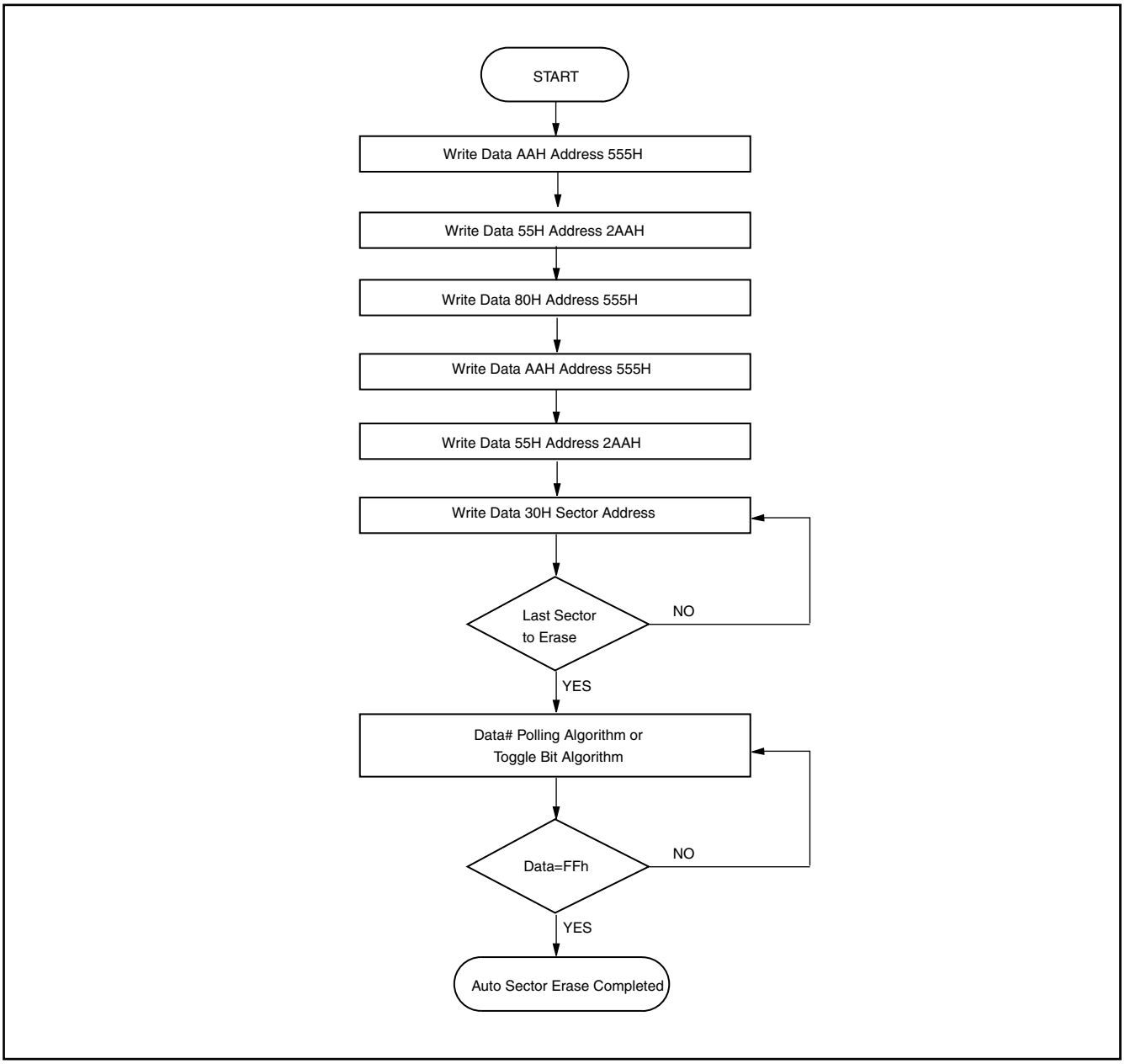

Figure 11. ERASE SUSPEND/RESUME FLOWCHART

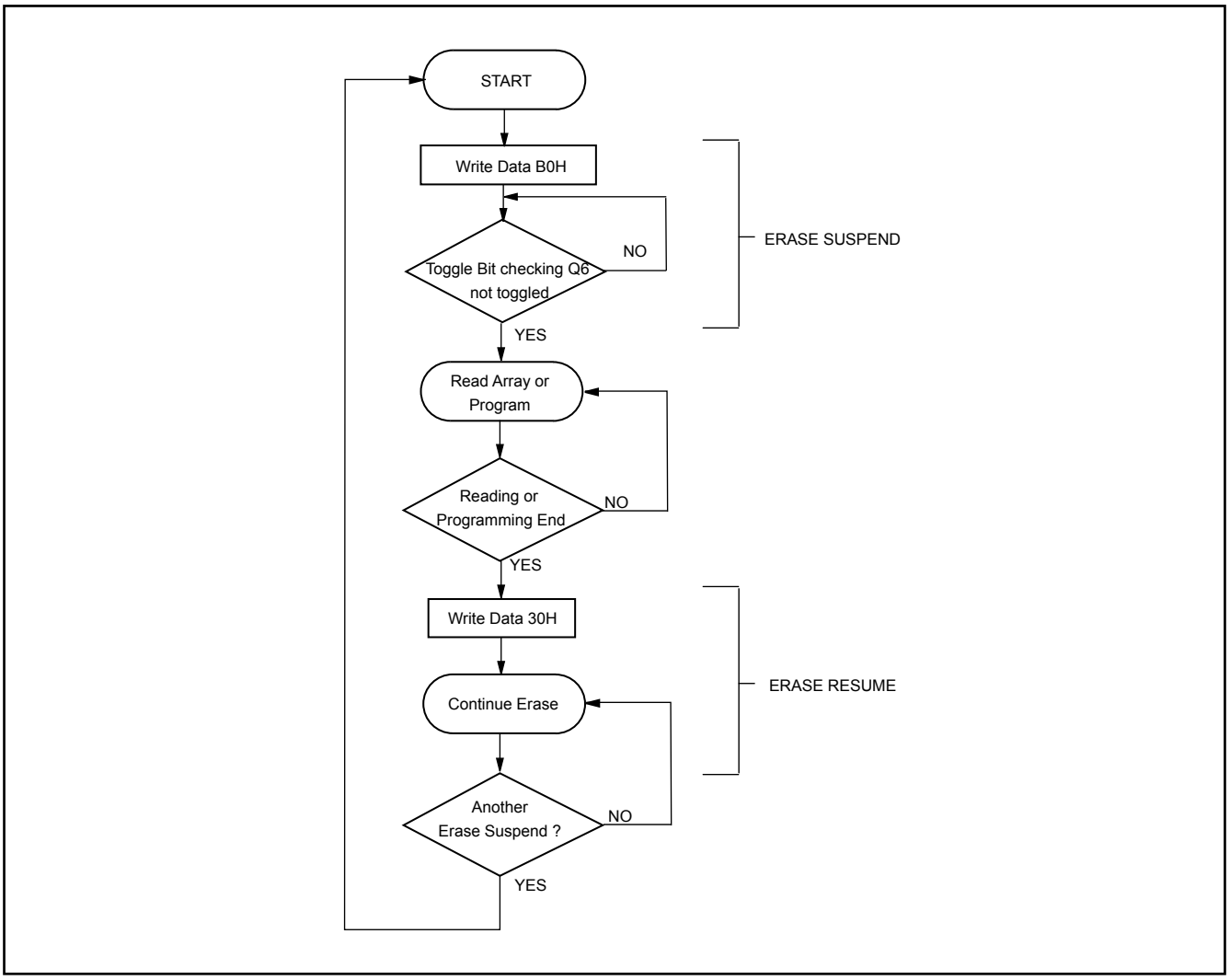

Figure 12. AUTOMATIC PROGRAM TIMING WAVEFORMS

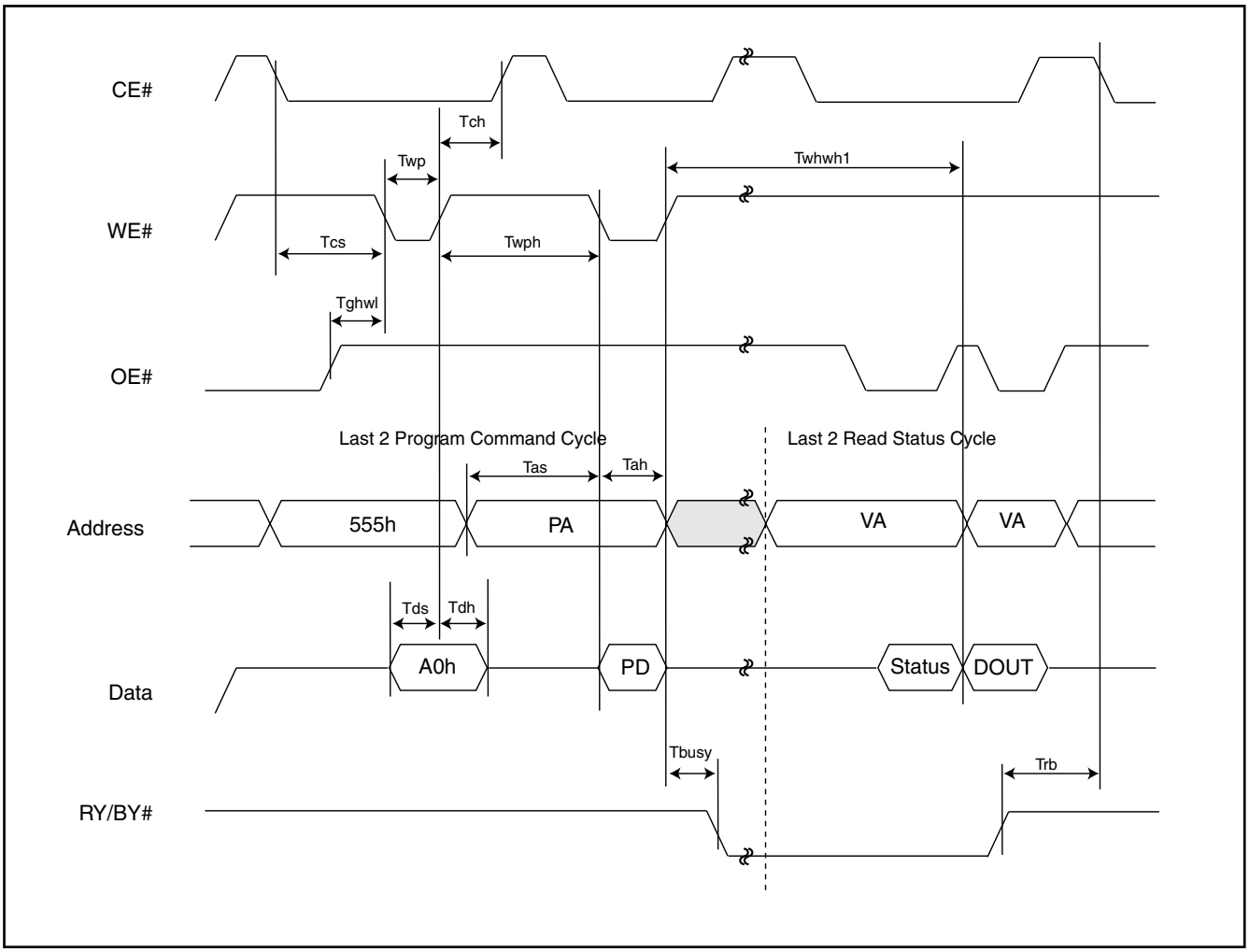

Figure 13. ACCELERATED PROGRAM TIMING DIAGRAM

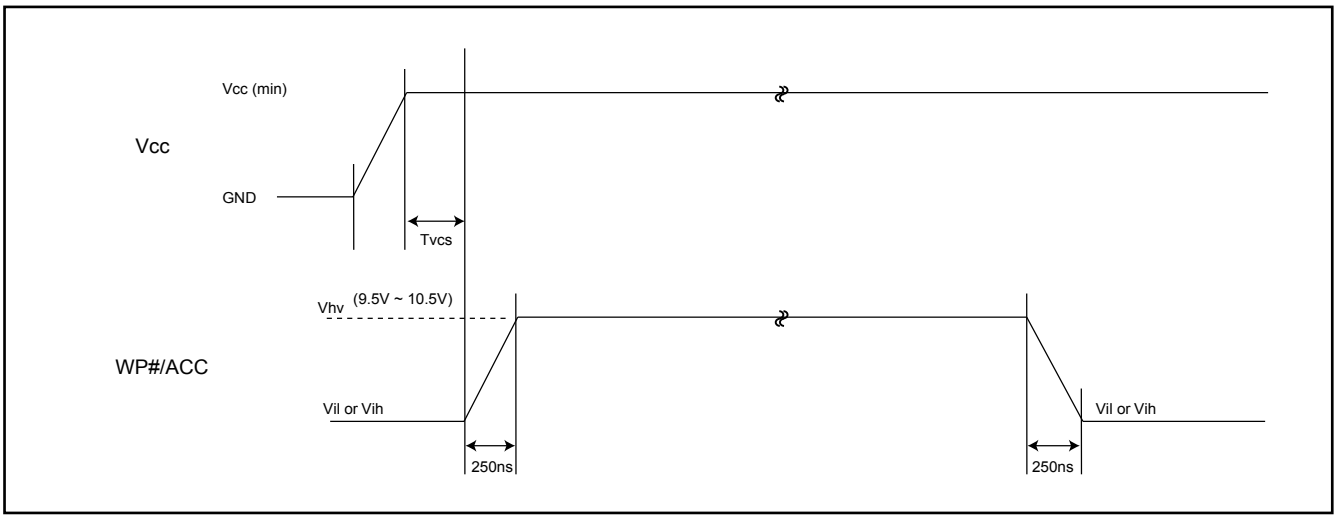

Figure 14. CE# CONTROLLED WRITE TIMING WAVEFORM

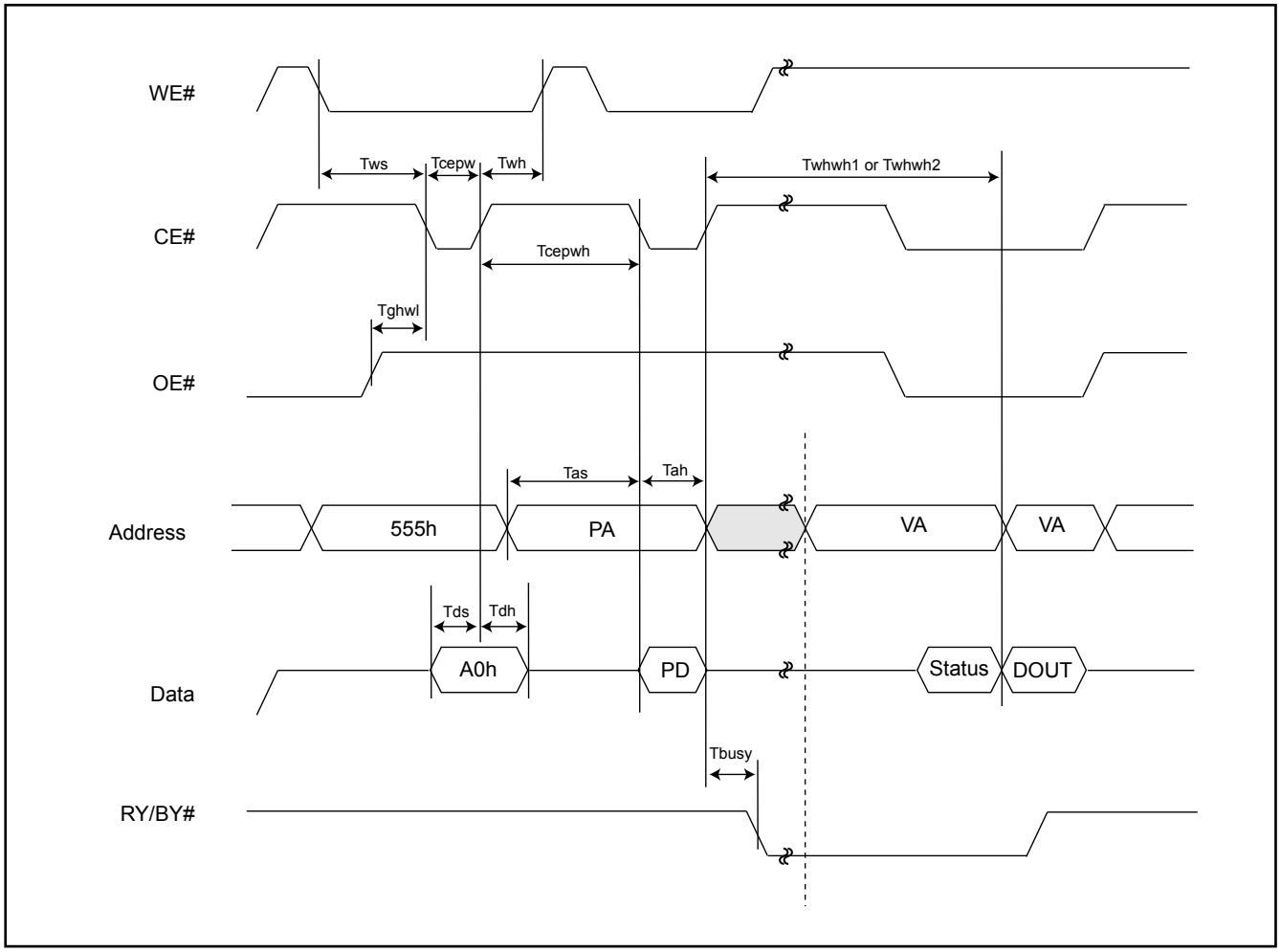

Figure 15. AUTOMATIC PROGRAMMING ALGORITHM FLOWCHART

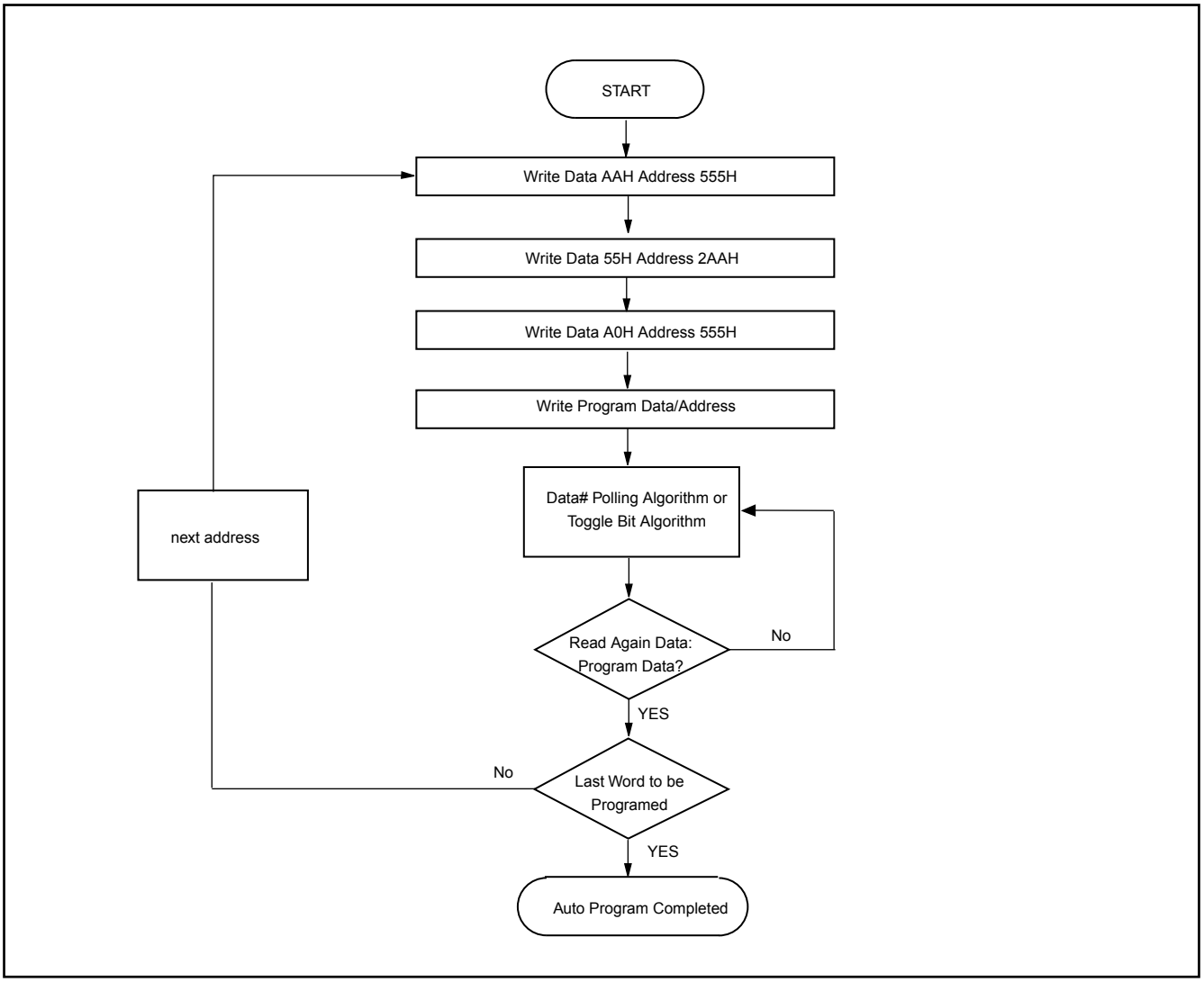

Figure 16. SILICON ID READ TIMING WAVEFORM

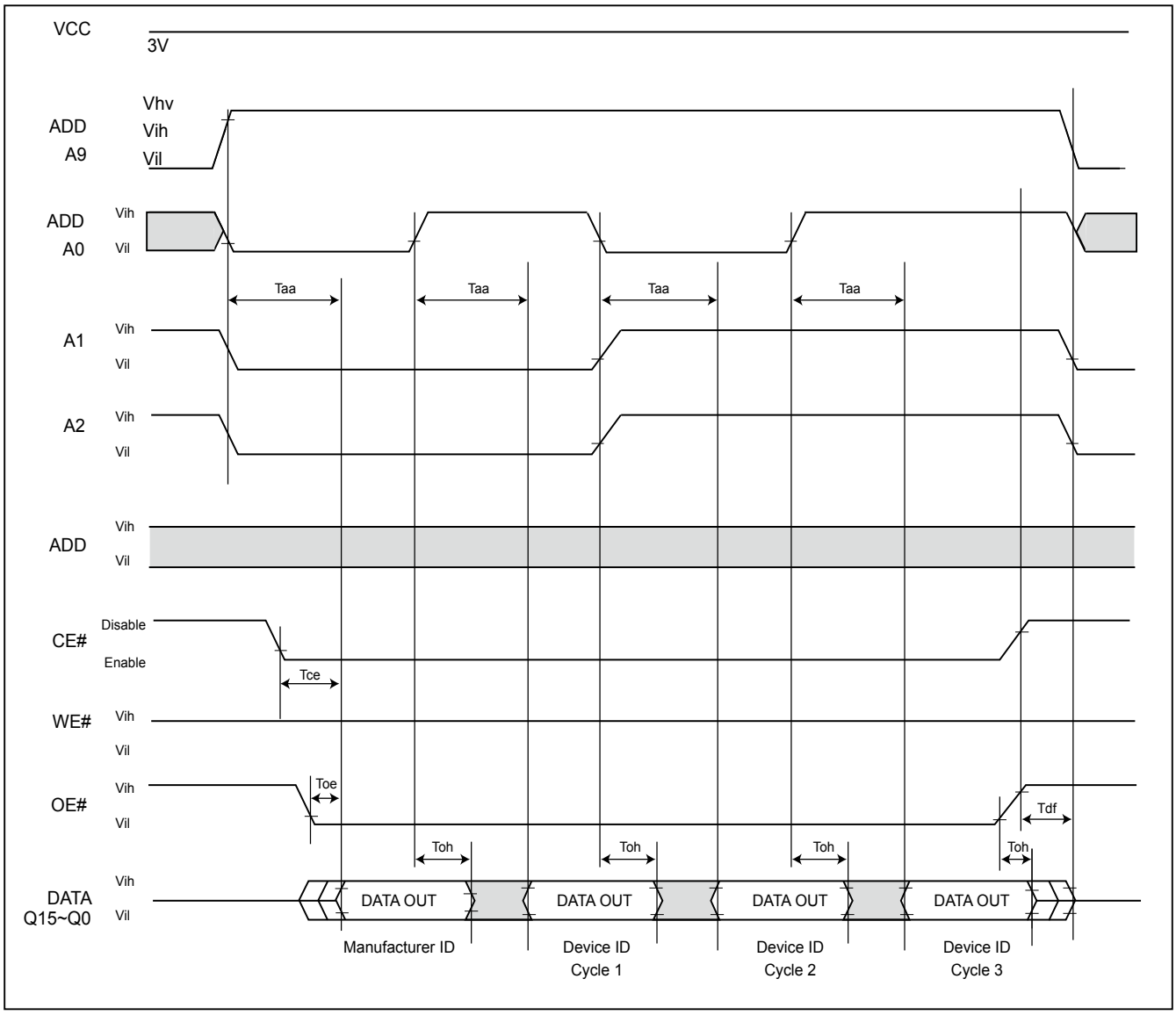

WRITE OPERATION STATUS

Figure 17. DATA# POLLING TIMING WAVEFORMS (DURING AUTOMATIC ALGORITHMS)

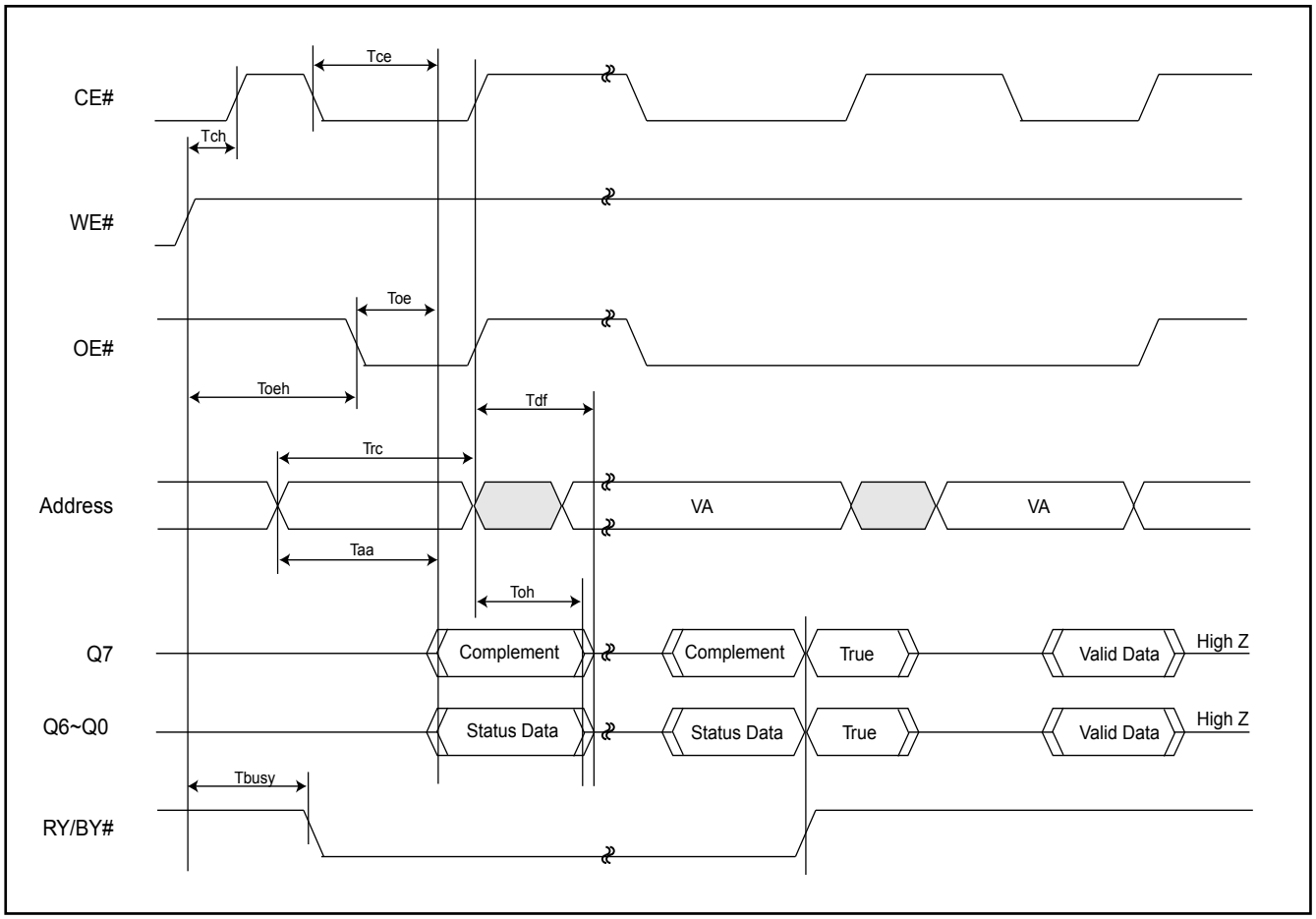

Figure 18. STATUS POLLING FOR WORD PROGRAM/ERASE

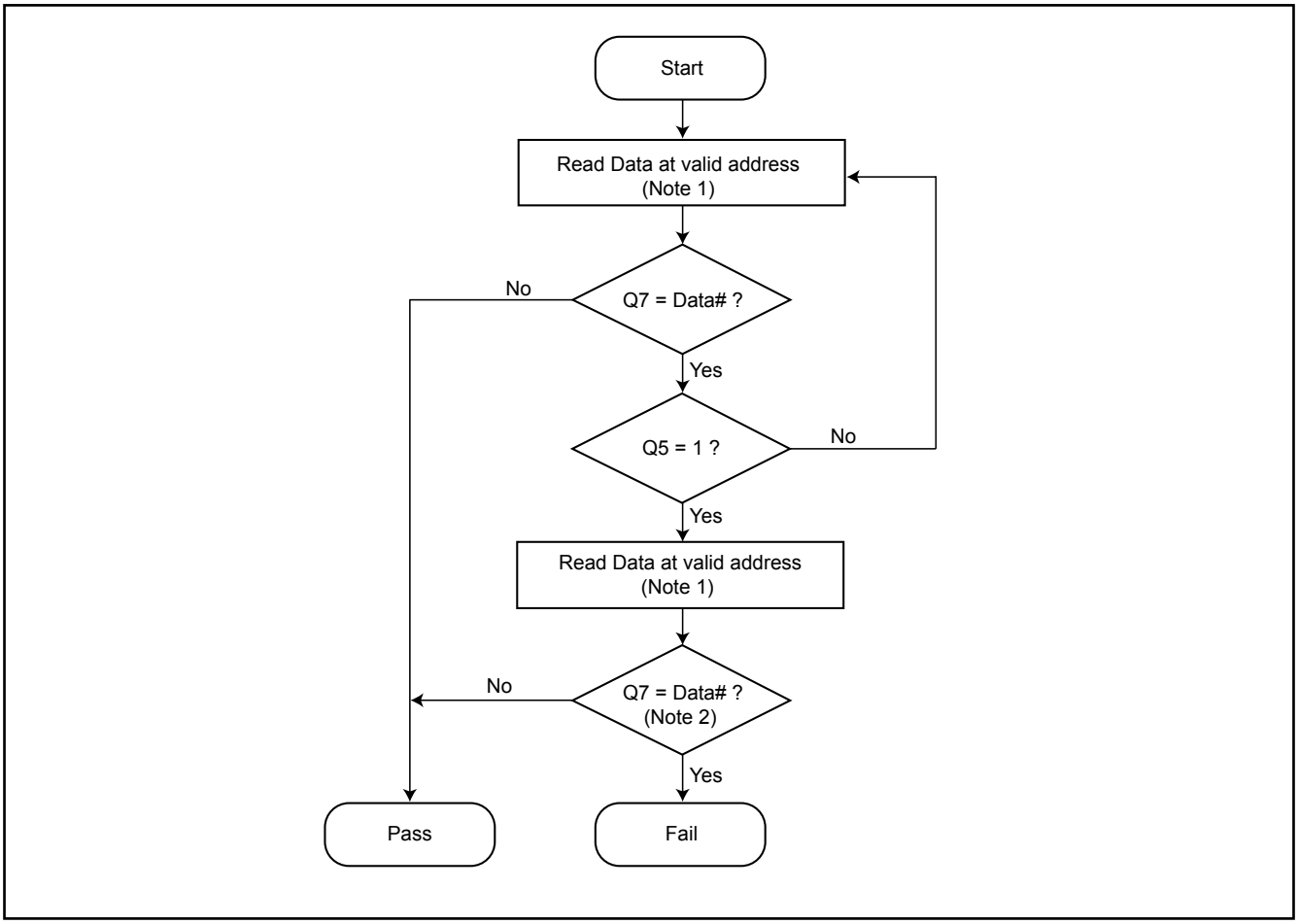

Notes:
1. For programming, valid address means program address.
   For erasing, valid address means erase sectors address.
2. Q7 may change simultaneously with Q5, so even Q5=1, Q7 should be reverify.

Figure 19. STATUS POLLING FOR WRITE BUFFER PROGRAM

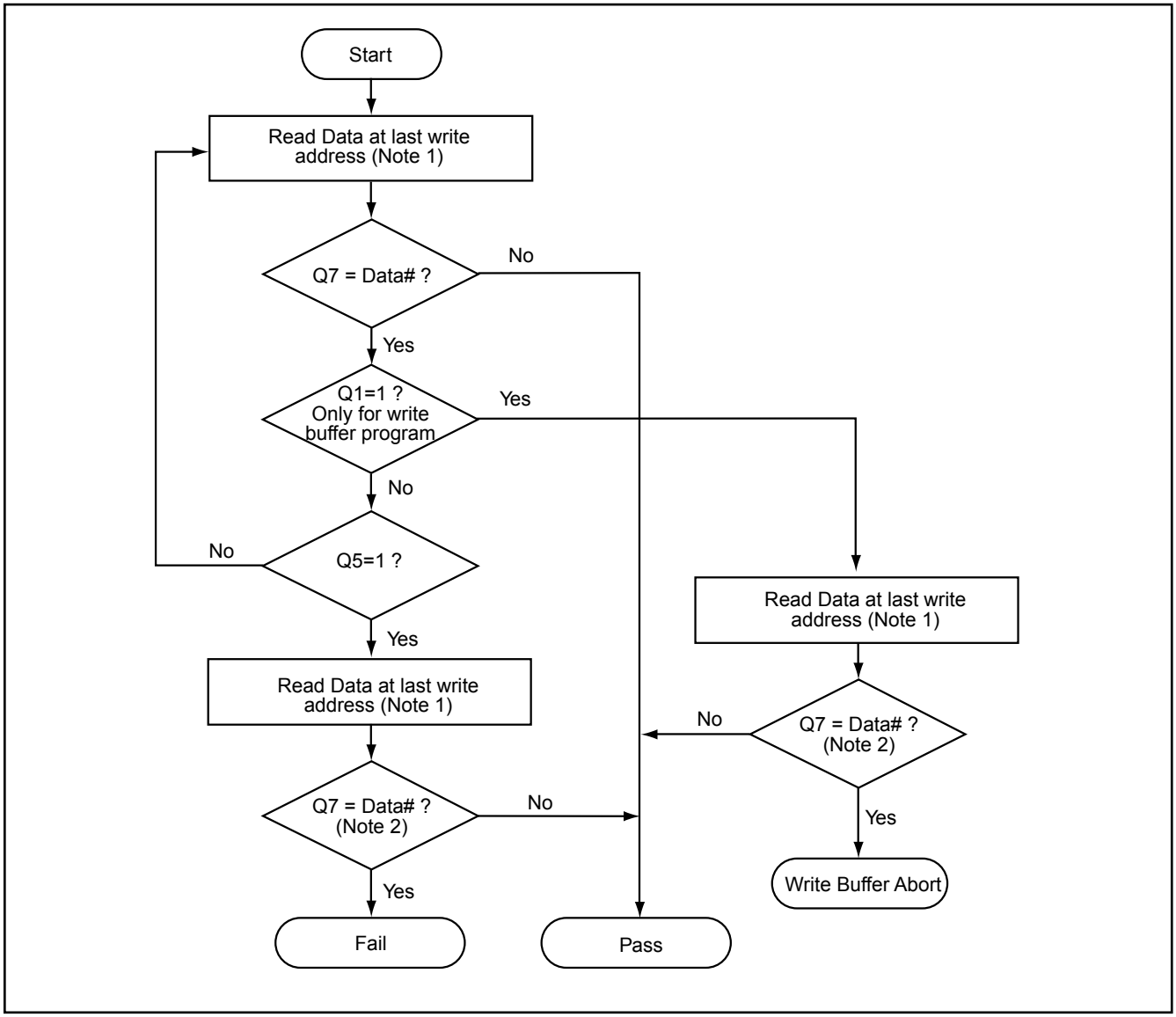

Notes:

1. For programming, valid address means program address.
   For erasing, valid address means erase sectors address.
2. Q7 may change simultaneously with Q5, so even Q5=1, Q7 should be reverify.

Figure 20. TOGGLE BIT TIMING WAVEFORMS (DURING AUTOMATIC ALGORITHMS)

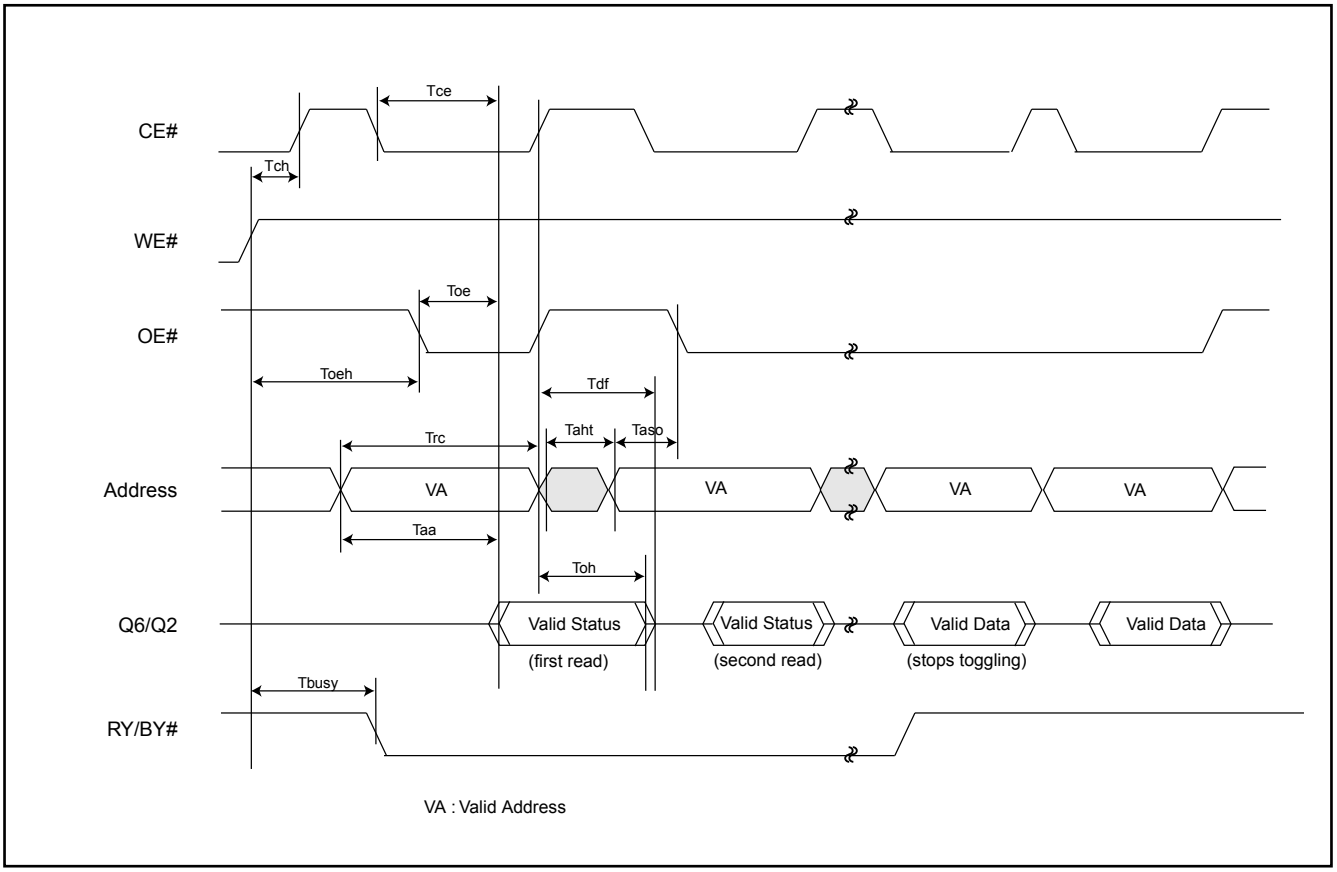

Figure 21. TOGGLE BIT ALGORITHM

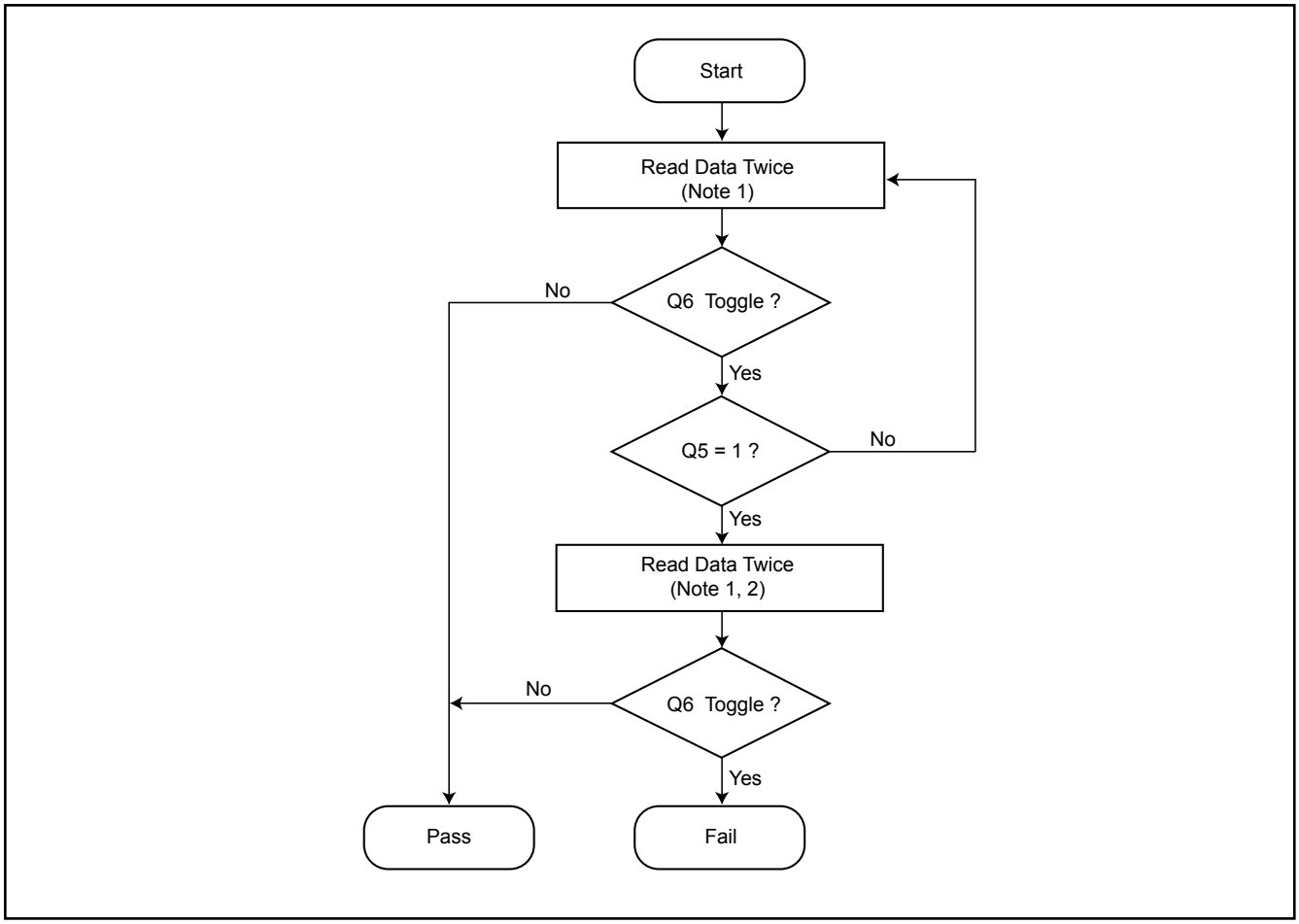

Notes:
1. Toggle bit Q7-Q0 should be read twice to check if it is toggling.
2. While Q5=1, the toggle bit (Q6) may stop toggling. Therefore, the system should be read again.

AC CHARACTERISTICS

WORD/BYTE CONFIGURATION (BYTE#)

Parameter	Description	Test Setup	All Speed Options	Unit
Telfl/Telfh	CE# to BYTE# from L/H	Max.	5	ns
Tflqz	BYTE# from L to Output Hiz	Max.	30	ns
Tfhqv	BYTE# from H to Output Active	Min.	90	ns

Figure 22. BYTE# TIMING WAVEFORM FOR READ OPERATIONS (BYTE# switching from byte mode to word mode)

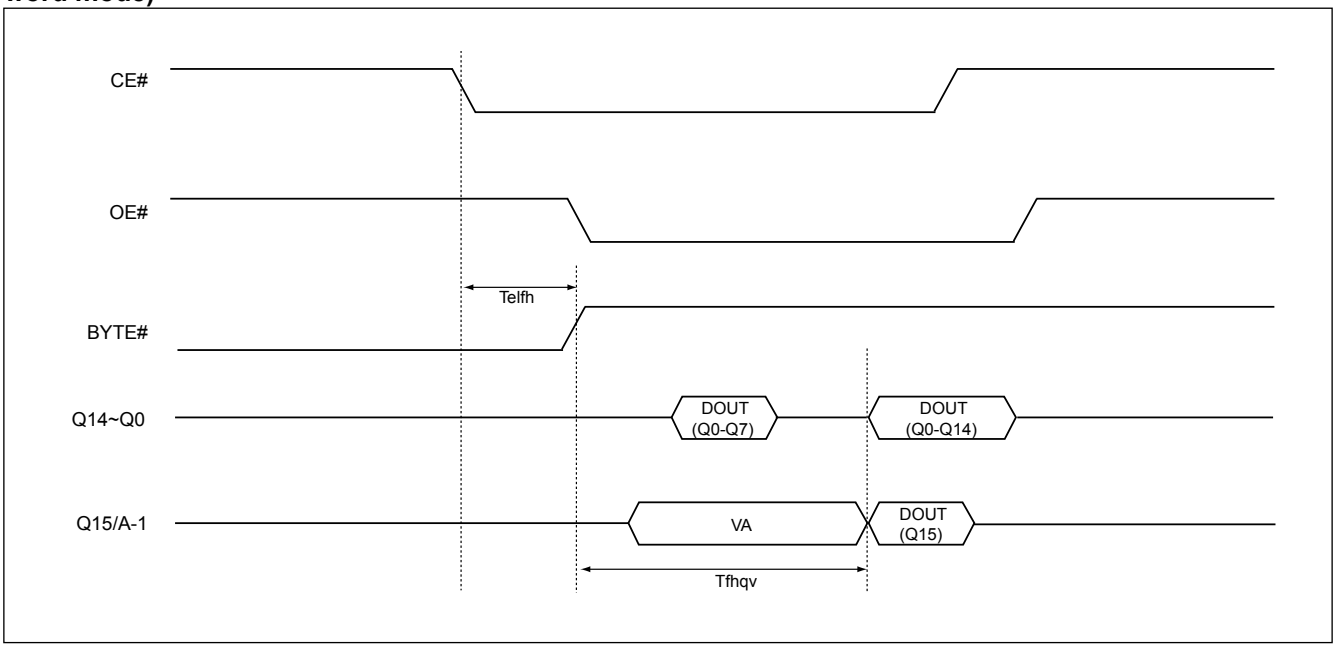

Figure 23. PAGE READ TIMING WAVEFORM

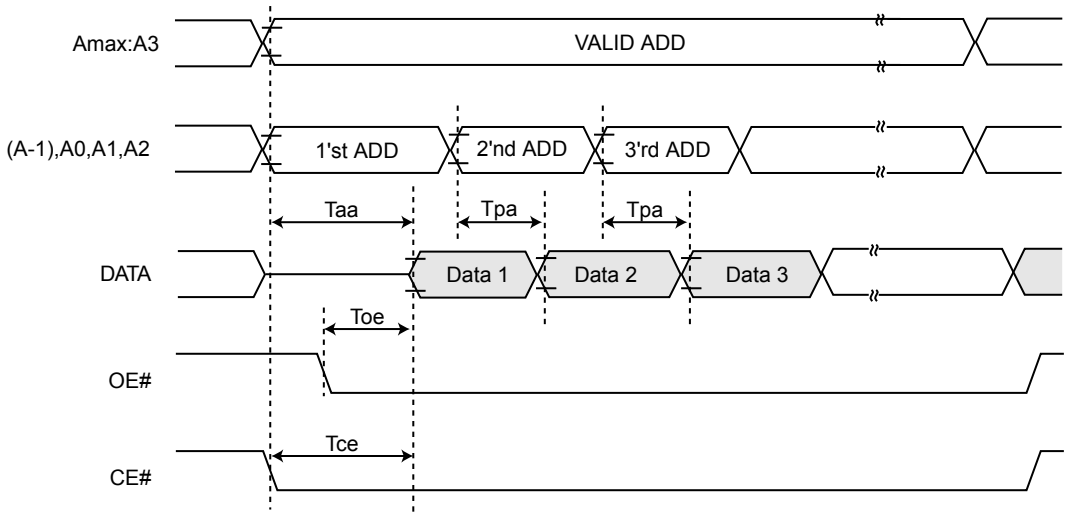

Note: CE#, OE# are enable.
Page size is 8 words in Word mode, 16 bytes in Byte mode.
Address are A2~A0 for Word mode, A2~A-1 for Byte mode.

AC CHARACTERISTICS

Item		Typ.	Max.
WEB high to release from deep power down mode	tRDP	100us	200us
WEB high to deep power down mode	tDP	10us	20us

Figure 24. DEEP POWER DOWN MODE WAVEFORM

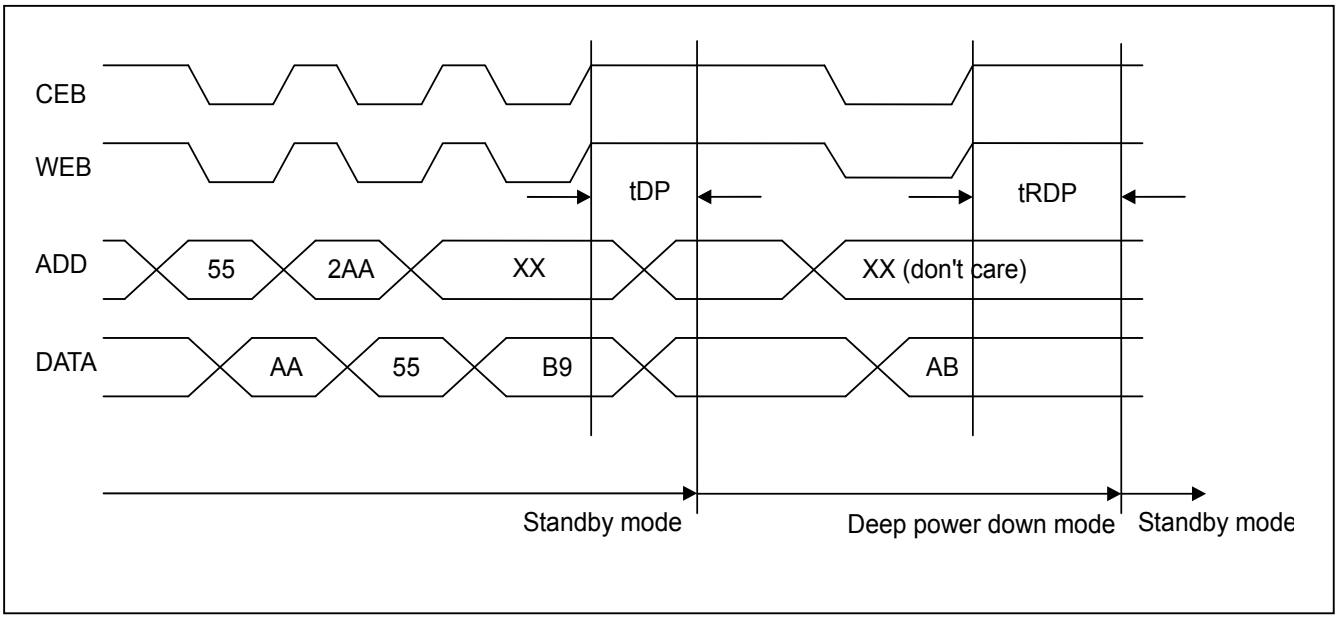

Figure 25. WRITE BUFFER PROGRAM FLOWCHART

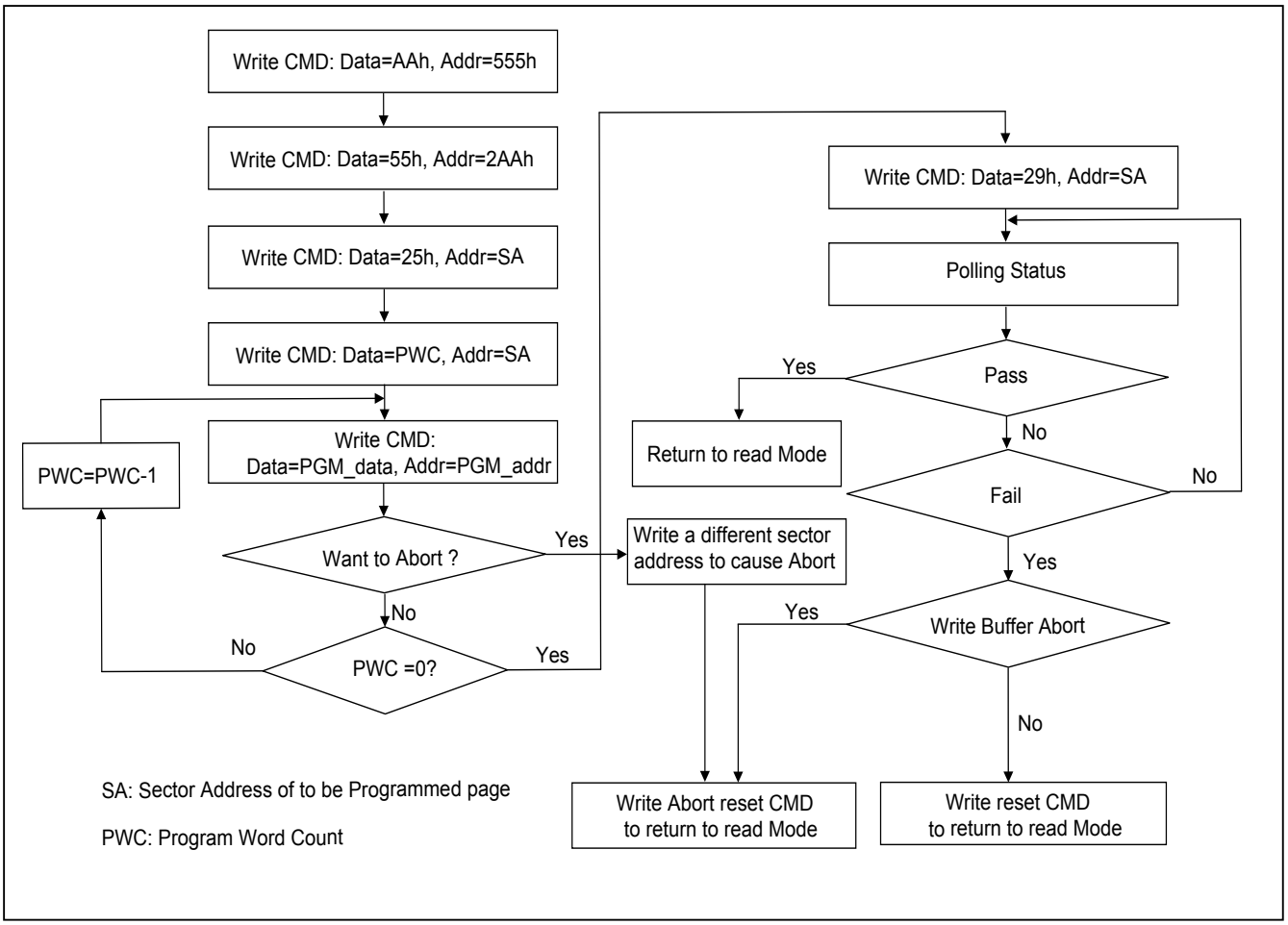

RECOMMENDED OPERATING CONDITIONS

At Device Power-Up

AC timing illustrated in Figure A is recommended for the supply voltages and the control signals at device power-up (e.g. Vcc and CE# ramp up simultaneously). If the timing in the figure is ignored, the device may not operate correctly.

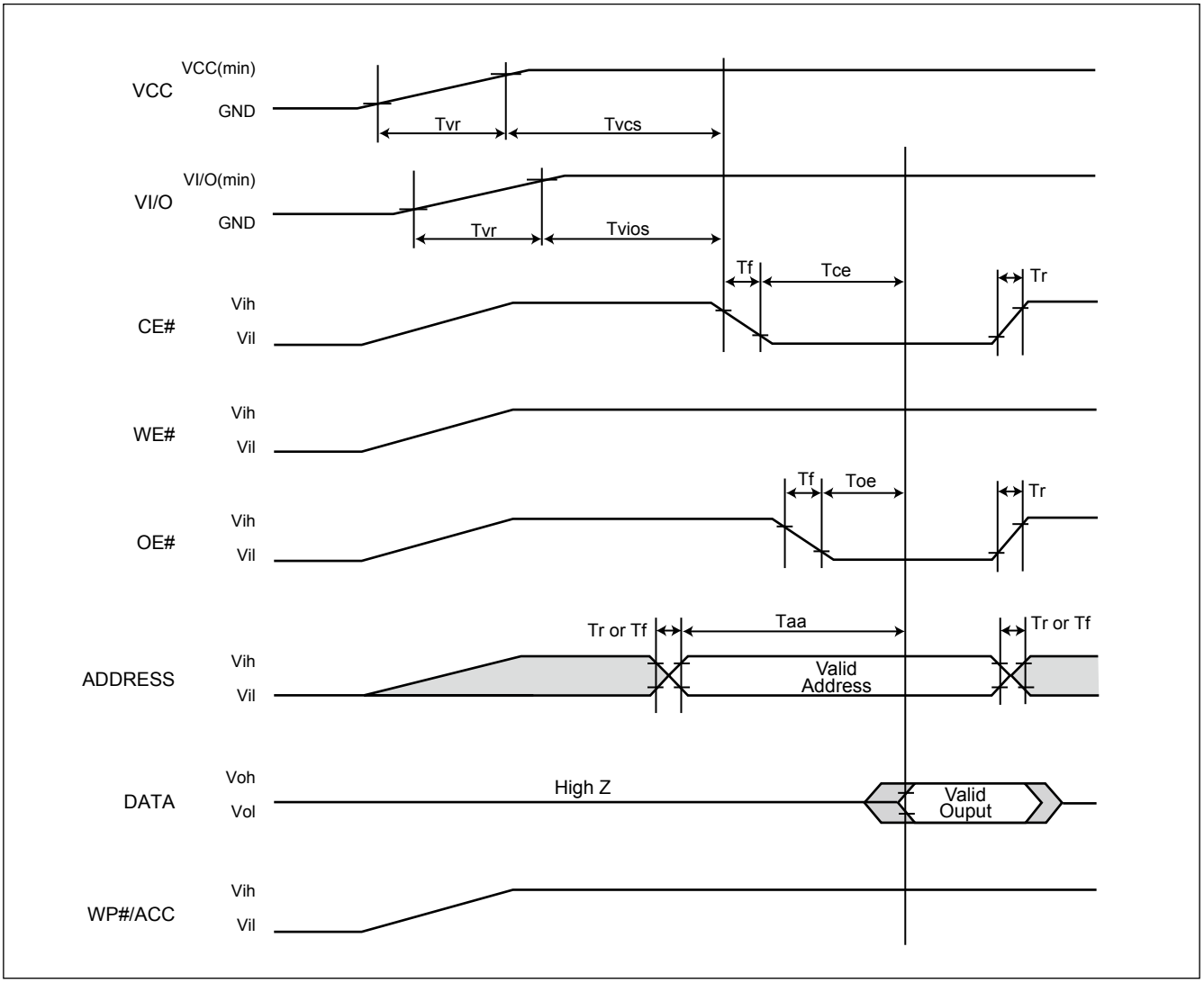

Figure A. AC Timing at Device Power-Up

Symbol	Parameter	Min.	Max.	Unit
Tvr	VCC Rise Time	20	500000	us/V
Tr	Input Signal Rise Time		20	us/V
Tf	Input Signal Fall Time		20	us/V
Tvcs	VCC Setup Time	500		us
Tvios	VI/O Setup Time	500		us

Notes:
1. VI/O<VCC+200mV.
2. Not test 100%

ERASE AND PROGRAMMING PERFORMANCE

Parameter		Limits			Units
		Min.	Typ. (1)	Max. (2)	
Chip Erase Time			200	500	sec
Sector Erase Time			0.5	3.5	sec
Chip Programming Time			160	700	sec
Word Program Time			10	180	us
Total Write Buffer Time	EPN for 10Q		120	240	us
	EPN for 11G/12G		70	140	us
ACC Total Write Buffer Time	EPN for 10Q		70		us
	EPN for 11G/12G		70		us
Erase/Program Cycles		100,000			Cycles

Notes:
1. Typical program and erase times assume the following conditions: 25°C, 3.0V VCC. Programming specifications assume checkboard data pattern.
2. Maximum values are measured at VCC = 3.0 V, worst case temperature. Maximum values are valid up to and including 100,000 program/erase cycles.
3. Erase/Program cycles comply with JEDEC JESD-47 & JESD 22-A117 standard.
4. Exclude 00h program before erase operation.

DATA RETENTION

Parameter	Condition	Min.	Max.	Unit
Data retention	55˚C	20		years

LATCH-UP CHARACTERISTICS

	Min.	Max.
Input Voltage voltage difference with GND on WP#/ACC and A9 pins	-1.0V	10.5V
Input Voltage voltage difference with GND on all normal pins input	-1.0V	1.5Vcc
Vcc Current	-100mA	+100mA
All pins included except Vcc. Test conditions: Vcc = 3.0V, one pin per testing		

PIN CAPACITANCE

Parameter Symbol	Parameter Description	Test Set	Typ.	Max.	Unit
CIN2	Control Pin Capacitance	VIN=0	7.5	35	pF
COUT	Output Capacitance	VOUT=0	8.5	12	pF
CIN	Input Capacitance	VIN=0	10	15	pF

ORDERING INFORMATION

PART NO.	ACCESS TIME (ns)	PACKAGE	Remark
MX29GL512FHXFI-10Q	100	64 LFBGA	Slow Total Write Buffer Time
MX29GL512FLXFI-10Q	100	64 LFBGA	Slow Total Write Buffer Time
MX29GL512FHT2I-10Q	100	56 Pin TSOP	Slow Total Write Buffer Time
MX29GL512FLT2I-10Q	100	56 Pin TSOP	Slow Total Write Buffer Time
MX29GL512FHXFI-11G	110	64 LFBGA	Fast Total Write Buffer Time
MX29GL512FLXFI-11G	110	64 LFBGA	Fast Total Write Buffer Time
MX29GL512FHT2I-11G	110	56 Pin TSOP	Fast Total Write Buffer Time
MX29GL512FLT2I-11G	110	56 Pin TSOP	Fast Total Write Buffer Time
MX29GL512FUXFI-12G	120	64 LFBGA	Fast Total Write Buffer Time
MX29GL512FDXFI-12G	120	64 LFBGA	Fast Total Write Buffer Time
MX29GL512FUT2I-12G	120	56 Pin TSOP	Fast Total Write Buffer Time
MX29GL512FDT2I-12G	120	56 Pin TSOP	Fast Total Write Buffer Time
MX29GL512FUXFI-11G	110	64 LFBGA	Fast Total Write Buffer Time
MX29GL512FDXFI-11G	110	64 LFBGA	Fast Total Write Buffer Time
MX29GL512FUT2I-11G	110	56 Pin TSOP	Fast Total Write Buffer Time
MX29GL512FDT2I-11G	110	56 Pin TSOP	Fast Total Write Buffer Time
MX29GL512FHXGI-10Q *	100	56 FBGA	Slow Total Write Buffer Time
MX29GL512FLXGI-10Q *	100	56 FBGA	Slow Total Write Buffer Time

* Advance Information

PART NAME DESCRIPTION

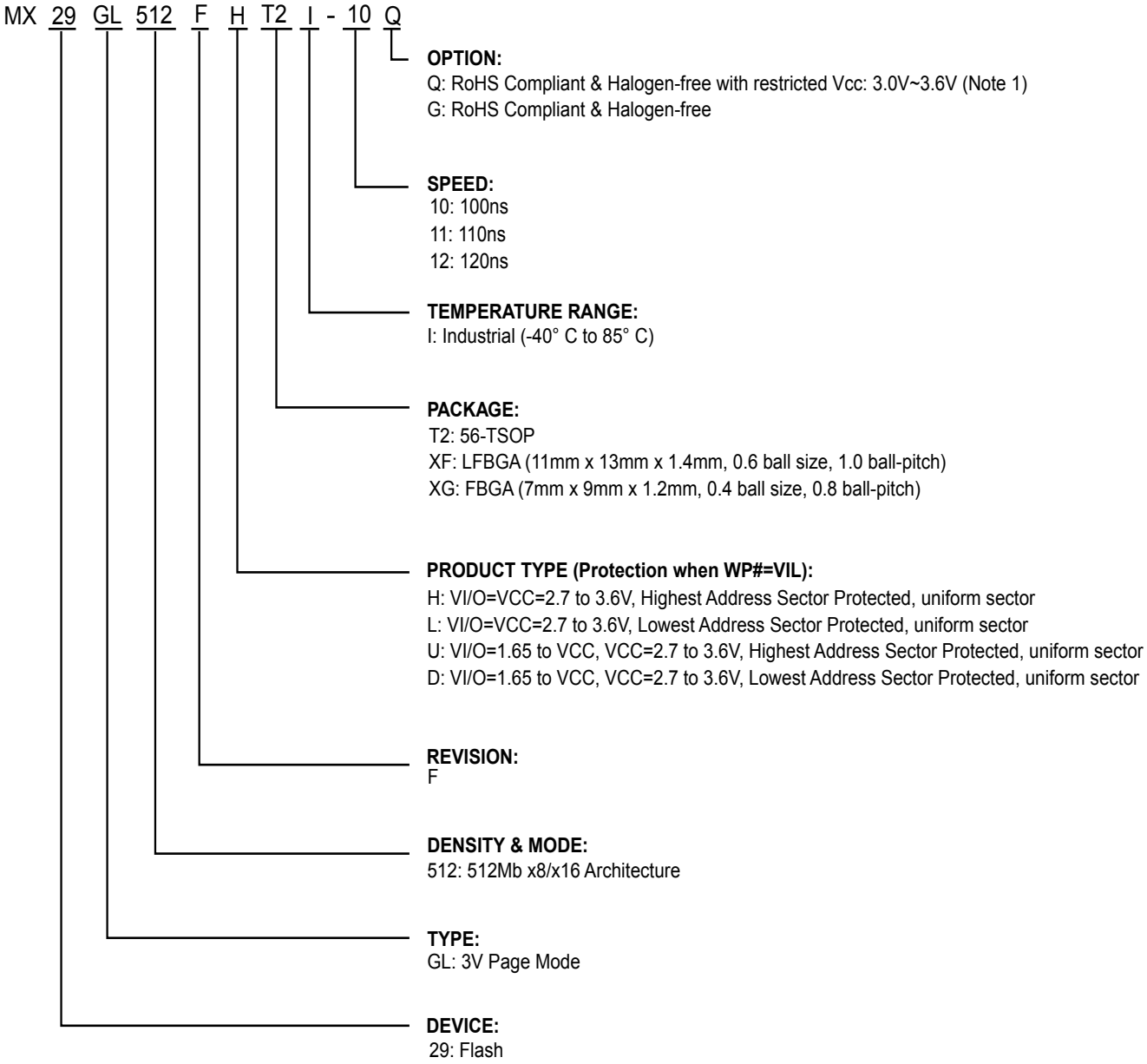

Note 1: 10Q covers 2.7V~3.6V for 110ns and 3.0V~3.6V for 100ns.

PACKAGE INFORMATION

Doc. Title: Package Outline for TSOP(I) 56L (14X20mm)

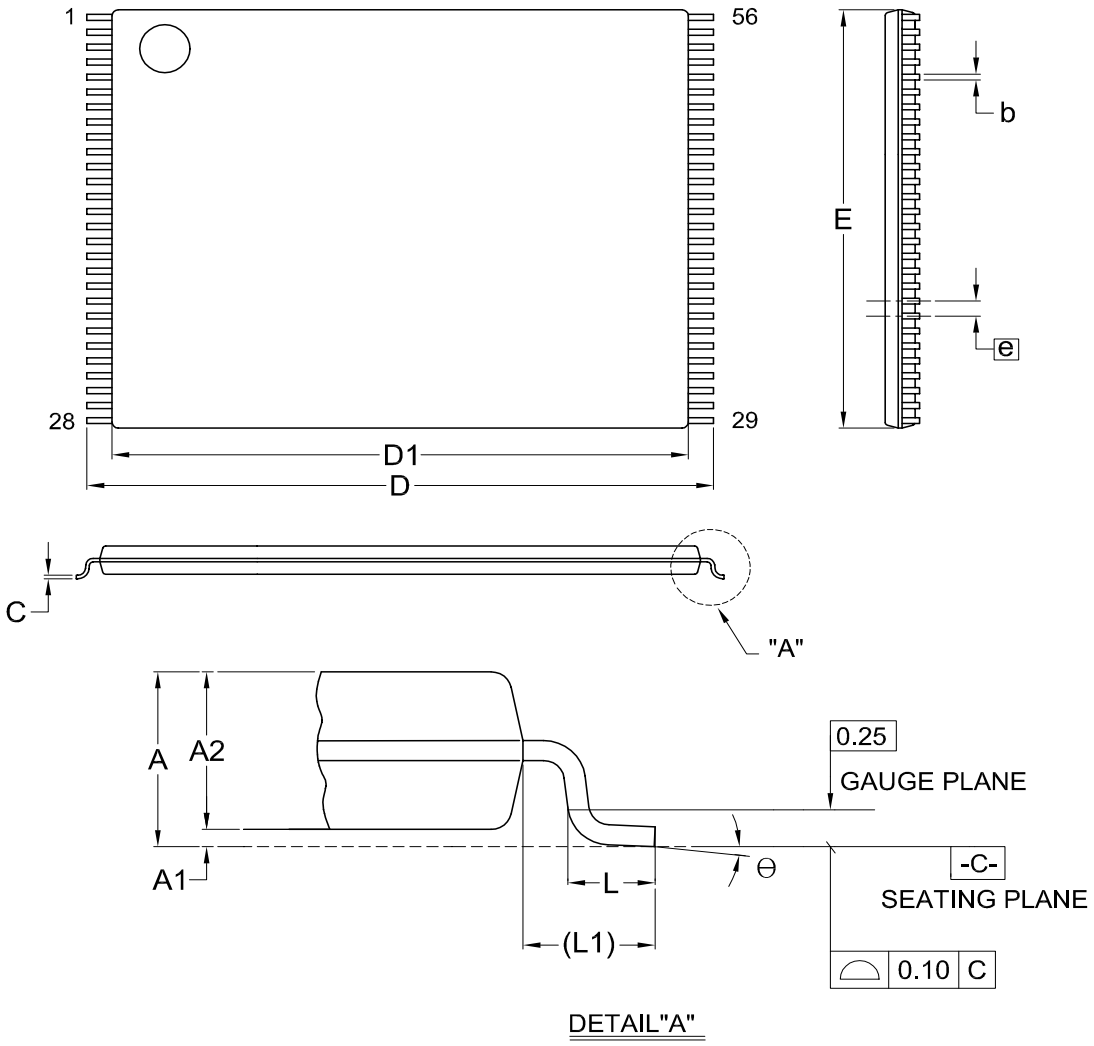

Dimensions (inch dimensions are derived from the original mm dimensions)

SYMBOL / UNIT		A	A1	A2	b	C	D	D1	E	e	L	L1	Θ
mm	Min.	---	0.05	0.95	0.17	0.10	19.80	18.30	13.90		0.50	0.70	0
	Nom.	---	0.10	1.00	0.20	0.13	20.00	18.40	14.00	0.50	0.60	0.80	5
	Max.	1.20	0.15	1.05	0.27	0.21	20.20	18.50	14.10		0.70	0.90	8
Inch	Min.	---	0.002	0.037	0.007	0.004	0.780	0.720	0.547		0.020	0.028	0
	Nom.	---	0.004	0.039	0.008	0.005	0.787	0.724	0.551	0.020	0.024	0.031	5
	Max.	0.047	0.006	0.041	0.011	0.008	0.795	0.728	0.555		0.028	0.035	8

Dwg. No.	Revision	Reference			
		JEDEC	EIAJ		
6110-1608	5	MO-142			

Doc. Title: Package Outline for CSP 64BALL(11X13X1.4MM,BALL PITCH 1.00MM,BALL DIAMETER 0.6MM)

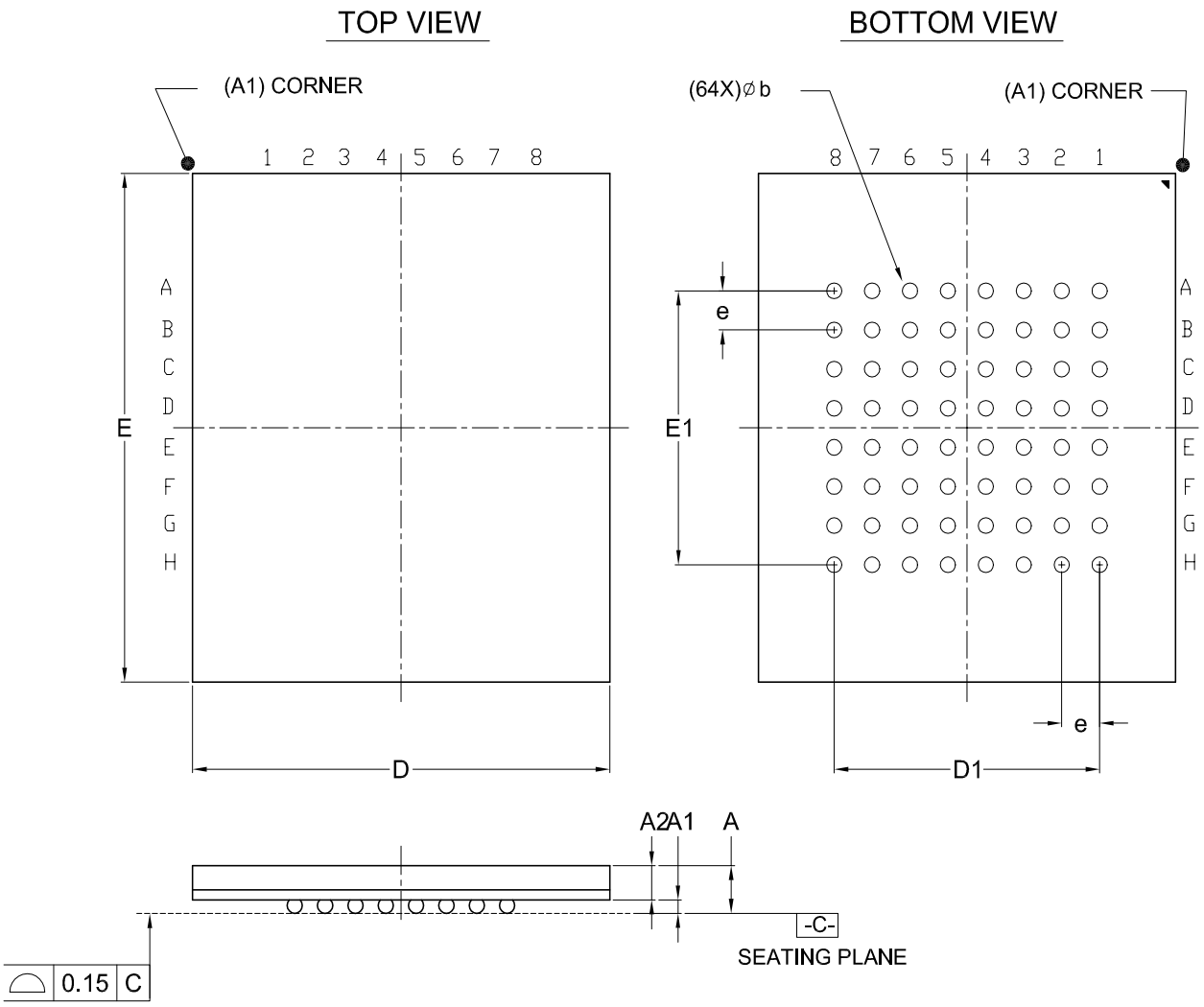

Dimensions (inch dimensions are derived from the original mm dimensions)

SYMBOL / UNIT		A	A1	A2	b	D	D1	E	E1	e
mm	Min.	---	0.40	0.65	0.50	10.90		12.90		
	Nom.	---	0.50	---	0.60	11.00	7.00	13.00	7.00	1.00
	Max.	1.40	0.60	---	0.70	11.10		13.10		
Inch	Min.	---	0.016	0.026	0.020	0.429		0.508		
	Nom.	---	0.020	---	0.024	0.433	0.276	0.512	0.276	0.039
	Max.	0.055	0.024	---	0.028	0.437		0.516		

Dwg. No.	Revision	Reference			
		JEDEC	EIAJ		
6110-4247	1	MO-192			

Doc. Title: Package Outline for CSP 56BALL(7X9X1.2MM,BALL PITCH 0.8MM,BALL DIAMETER 0.4MM)

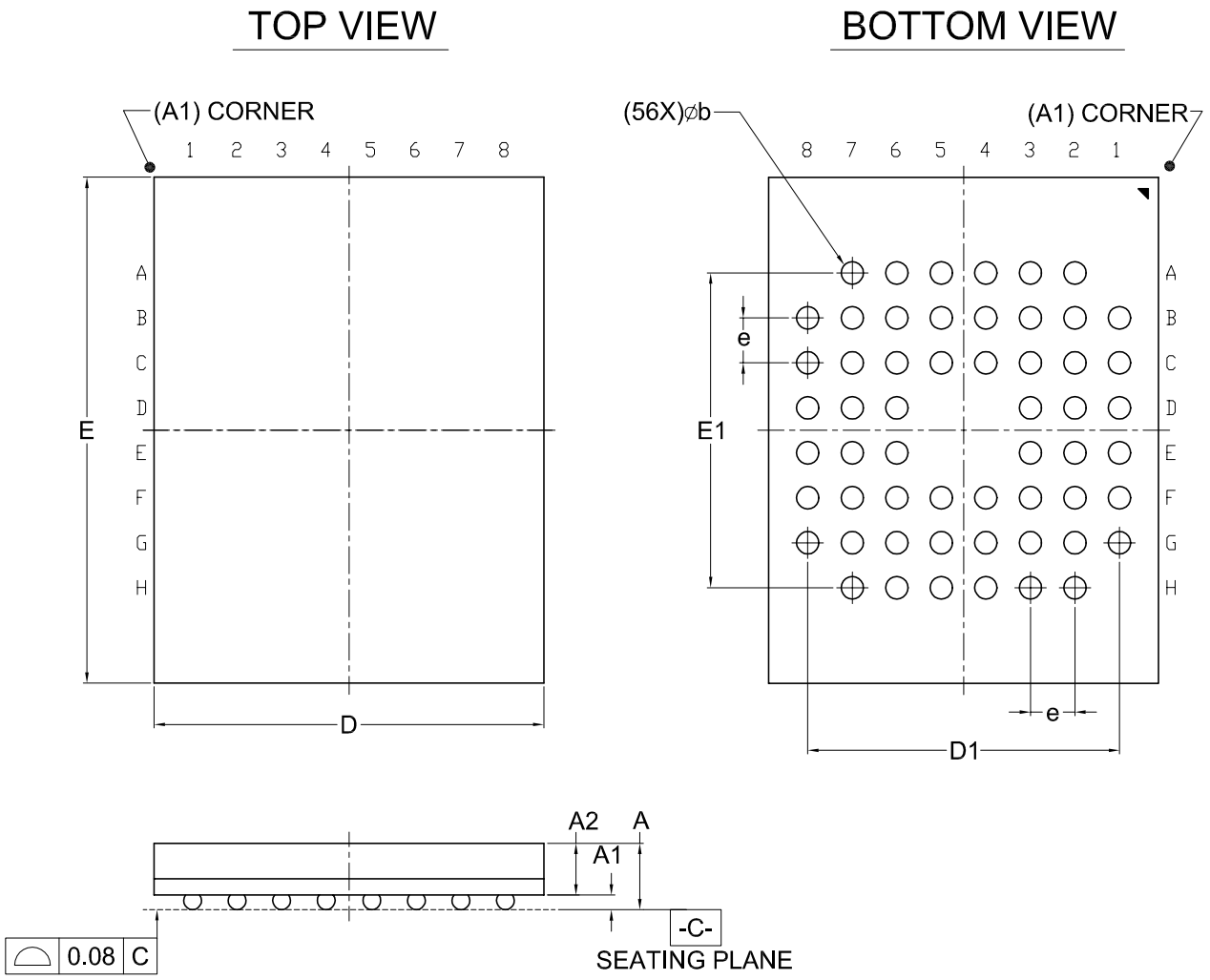

Dimensions (inch dimensions are derived from the original mm dimensions)

SYMBOL / UNIT		A	A1	A2	b	D	D1	E	E1	e
mm	Min.	---	0.25	0.65	0.35	6.90	---	8.90	—	---
	Nom.	---	0.30	—	0.40	7.00	5.60	9.00	5.60	0.80
	Max.	1.20	0.35	—	0.45	7.10	---	9.10	—	---
Inch	Min.	---	0.010	0.026	0.014	0.272	---	0.350	—	---
	Nom.	---	0.012	—	0.016	0.276	0.220	0.354	0.220	0.031
	Max.	0.047	0.014	—	0.018	0.280	---	0.358	—	---

Dwg. No.	Revision	Reference			
		JEDEC	EIAJ		
6110-4265	1				

REVISION HISTORY

Revision No.	Description	Page	Date
0.01	1. Removed 70-SSOP package information	P5,7,65,66	APR/19/2011
	2. Modified description for RoHS compliance	P5,65	
	3. Modified Figure 10 & 14	P50,54	
	4. Added wording (e.g. Vcc and CE# ramp up simultaneously)	P62	
	5. Modified "PIN CAPACITANCE" table	P63	
	6. Modified Sector Protection Status Table	P30	
	7. Modified Vlko	P39	
1.0	1. Removed the title "Advanced Information"	P5	JUN/24/2011
	2. Modified Figure 16. Status Polling For Write Buffer Program for Abort function	P14,56	
	3. Modified Total Write Buffer Time from 200us(typ.) to 120us(typ.)	P63	
1.1	1. Modified Total Write Buffer Time & ACC Total Write Buffer Time	P63	NOV/02/2011
	2. Modified Ordering Information & Part Name Description	P64,65	
1.2	1. Added MX29GL512F U/D function	P5,7,38-39 P40-41,64	JAN/19/2012
	2. Added MX29GL512F U/D ORDERING INFORMATION and PART NAME DESCRIPTION	P65,66	
1.3	1. Added VI/O=1.65 to VCC for Trc, Twc and Tcwc	P41	MAY/24/2012
	2. Modified Figure 11. CE# Controlled Write Timing Waveform	P52	
	3. Added VI/O Setup Time	P63	
	4. Added VI/O=1.65 to VCC Ordering Information for 110ns	P65	
1.4	1. Added 56-ball FBGA package information	P5,7,65,66, P69	JUL/31/2012
	2. Added Vcc deep power down current: 60uA(Max.)	P39	
1.5	1. Added "Note 1. Query data are always presented on the lowest data output Q7~Q0 only, Q8~Q15 are "0".	P35	AUG/12/2013
	2. Added Word/Byte Configuration (BYTE#) & Figure 19. BYTE# Timing Waveform For Read Operations	P60	
	3. Modified Figure 20. Page Read Timing Waveform	P61	
	4. Advanced Sector Protection/Un-protection description updated	P25~30	
	5. Added MAX. Total Write Buffer Time	P65	
1.6	1. Updated parameters for DC Characteristics.	P5,39	OCT/30/2013
	2. Updated Erase and Programming Performance.	P5,42,65	
	3. Content correction	P25~30	

Except for customized products which have been expressly identified in the applicable agreement, Macronix's products are designed, developed, and/or manufactured for ordinary business, industrial, personal, and/or household applications only, and not for use in any applications which may, directly or indirectly, cause death, personal injury, or severe property damages. In the event Macronix products are used in contradicted to their target usage above, the buyer shall take any and all actions to ensure said Macronix's product qualified for its actual use in accordance with the applicable laws and regulations; and Macronix as well as it's suppliers and/or distributors shall be released from any and all liability arisen therefrom.

Copyright© Macronix International Co., Ltd. 2010~2013. All rights reserved, including the trademarks and tradename thereof, such as Macronix, MXIC, MXIC Logo, MX Logo, Integrated Solutions Provider, NBit, Nbit, NBiit, Macronix NBit, eLiteFlash, HybridNVM, HybridFlash, XtraROM, Phines, KH Logo, BE-SONOS, KSMC, Kingtech, MXSMIO, Macronix vEE, Macronix MAP, Rich Audio, Rich Book, Rich TV, and FitCAM. The names and brands of third party referred thereto (if any) are for identification purposes only.

For the contact and order information, please visit Macronix's Web site at: http://www.macronix.com