MX25U80356

1.8V, 8M-BIT [x 1/x 2/x 4]
CMOS MXSMIO® (SERIAL MULTI I/O)
FLASH MEMORY

Key Features

- *Multi I/O Support - Single I/O, Dual I/O and Quad I/O*
- *Quad Peripheral Interface (QPI) available*
- *Supports clock frequencies up to 133MHz*
- *Program/Erase Suspend and Resume*
- *Additional 8K-bit Secured OTP*

Contents

1. FEATURES 4
2. GENERAL DESCRIPTION 5
Table 1. Read performance Comparison 5
3. PIN CONFIGURATIONS 6
4. PIN DESCRIPTION 6
5. BLOCK DIAGRAM 7
6. DATA PROTECTION 8
Table 2. Protected Area Sizes 9
Table 3. 8K-bit Secured OTP Definition 10
7. Memory Organization 11
Table 4. Memory Organization 11
8. DEVICE OPERATION 12
8-1. Quad Peripheral Interface (QPI) Read Mode 14
9. COMMAND DESCRIPTION 15
Table 5. Command Set 15
9-1. Write Enable (WREN) 17
9-2. Write Disable (WRDI) 18
9-3. Factory Mode Enable (FMEN) 19
9-4. Read Identification (RDID) 20
9-5. Read Electronic Signature (RES) 21
9-6. Read Electronic Manufacturer ID & Device ID (REMS) 22
9-7. QPI ID Read (QPIID) 23
Table 6. ID Definitions 23
9-8. Read Status Register (RDSR) 24
9-9. Read Configuration Register (RDCR) 25
Table 7. Status Register 28
Table 8. Configuration Register Table 29
Table 9. Dummy Cycle and Frequency Table (MHz) 29
9-10. Write Status Register (WRSR) 30
Table 10. Protection Modes 31
9-11. Read Data Bytes (READ) 34
9-12. Read Data Bytes at Higher Speed (FAST_READ) 35
9-13. Dual Output Read Mode (DREAD) 37
9-14. 2 x I/O Read Mode (2READ) 38
9-15. Quad Read Mode (QREAD) 39
9-16. 4 x I/O Read Mode (4READ) 40
9-17. Burst Read 42
9-18. Performance Enhance Mode - XIP (execute-in-place) 43
9-19. Sector Erase (SE) 46
9-20. Block Erase (BE32K) 47
9-21. Block Erase (BE) 48
9-22. Chip Erase (CE) 49
9-23. Page Program (PP) 50

9-24. 4 x I/O Page Program (4PP) 52
9-25. Factory Mode Erase/Program Operations 53
9-26. Read Factory Mode Status 55
9-27. Deep Power-down (DP) 56
9-28. Release from Deep Power-down (RDP) 57
9-29. Enter Secured OTP (ENSO) 58
9-30. Exit Secured OTP (EXSO) 58
9-31. Read Security Register (RDSCUR) 59
9-32. Write Security Register (WRSCUR) 60
Table 11. Security Register Definition 61
9-33. Program Suspend and Erase Suspend 62
Table 12. Readable Area of Memory While a Program or Erase Operation is Suspended 62
Table 13. Acceptable Commands During Program/Erase Suspend after tPSL/tESL 63
Table 14. Acceptable Commands During Suspend (tPSL/tESL not required) 63
9-34. Program Resume and Erase Resume 64
9-35. No Operation (NOP) 65
9-36. Software Reset (Reset-Enable (RSTEN) and Reset (RST)) 65
9-37. Read SFDP Mode (RDSFDP) 67
10. RESET 68
Table 15. Reset Timing-(Power On) 68
Table 16. Reset Timing-(Other Operation) 68
10-1. In-Band-Reset 69
Table 17. In-Band-Reset Parameters 69
11. POWER-ON STATE 70
12. ELECTRICAL SPECIFICATIONS 71
Table 18. ABSOLUTE MAXIMUM RATINGS 71
Table 19. CAPACITANCE TA = 25°C, f = 1.0 MHz 71
Table 20. DC CHARACTERISTICS 73
Table 21. AC CHARACTERISTICS 74
13. OPERATING CONDITIONS 76
Table 22. Power-Up/Down Voltage and Timing 78
13-1. INITIAL DELIVERY STATE 78
14. ERASE AND PROGRAMMING PERFORMANCE 79
15. ERASE AND PROGRAMMING PERFORMANCE (Factory Mode) 79
16. DATA RETENTION 80
17. LATCH-UP CHARACTERISTICS 80
18. ORDERING INFORMATION 81
19. PART NAME DESCRIPTION 82
20. PACKAGE INFORMATION 83
20-1. 8-pin SOP (200mil) 83
20-2. 8-land XSON(4x4mm) 84
20-3. 8-land USON (2x3mm) 85
20-4. 8-pin SOP (150mil) 86

1.8V 8M-BIT [x 1/x 2/x 4] CMOS MXSMIO® (SERIAL MULTI I/O) FLASH MEMORY

1. FEATURES

GENERAL

- Supports Serial Peripheral Interface -- Mode 0 and Mode 3
- Single Power Supply Operation
  - 1.65 to 2.0 volts for read, erase, and program operations
- 8,388,608 x 1 bit structure
  or 4,194,304 x 2 bits (two I/O mode) structure
  or 2,097,152 x 4 bits (four I/O mode) structure
- Protocol Support
  - Single I/O, Dual I/O and Quad I/O
- Latch-up protected to 100mA from -1V to Vcc +1V
- Fast read for SPI mode
  - Supports clock frequencies up to 133MHz for all protocols
  - Supports Fast Read, 2READ, DREAD, 4READ, QREAD instructions.
  - Configurable dummy cycle number for fast read operation
- Supports Performance Enhance Mode - XIP (execute-in-place)
- Quad Peripheral Interface (QPI) available
- Equal 4K byte sectors, or Equal Blocks with 32K bytes or 64K bytes each
  - Any Block can be erased individually
- Programming :
  - 256byte page buffer
  - Quad Input/Output page program(4PP) to enhance program performance
- Typical 100,000 erase/program cycles
- 20 years data retention

SOFTWARE FEATURES

- Input Data Format
  - 1-byte Command code
- Advanced Security Features
  - Block lock protection
  The BP0-BP3 and T/B status bit defines the size of the area to be protection against program and erase instructions
- Additional 8K bit Secured OTP
  - Features unique identifier
  - Factory locked identifiable, and customer lockable
- Command Reset
- Program/Erase Suspend and Resume operation
- Electronic Identification
  - JEDEC 1-byte manufacturer ID and 2-byte device ID
  - RES command for 1-byte Device ID
  - REMS command for 1-byte manufacturer ID and 1-byte device ID
- Supports Serial Flash Discoverable Parameters (SFDP) mode

HARDWARE FEATURES

- SCLK Input
  - Serial clock input
- SI/SIO0
  - Serial Data Input or Serial Data Input/Output for 2 x I/O read mode and 4 x I/O read mode
- SO/SIO1
  - Serial Data Output or Serial Data Input/Output for 2 x I/O read mode and 4 x I/O read mode
- WP#/SIO2
  - Hardware write protection or Serial Data Input/Output for 4 x I/O read mode
- RESET#/SIO3
  - Hardware Reset pin or Serial Data Input/Output for 4 x I/O read mode
- PACKAGE
  - 8-pin SOP (150mil/200mil)
  - 8-land USON (2x3mm)
  - 8-land XSON(4x4mm)

  - **All devices are RoHS Compliant and Halogen-free**

2. GENERAL DESCRIPTION

MX25U80356 is 8Mb bits Serial NOR Flash memory, which is configured as 1,048,576 x 8 internally. When it is in four I/O mode, the structure becomes 2,097,152 bits x 4 or 4,194,304 bits x 2. MX25U80356 features a serial peripheral interface and software protocol allowing operation on a simple 3-wire bus while it is in single I/O mode. The three bus signals are a clock input (SCLK), a serial data input (SI), and a serial data output (SO). Serial access to the device is enabled by CS# input.

When it is in two I/O read mode, the SI pin and SO pin become SIO0 pin and SIO1 pin for address/dummy bits input and data output. When it is in four I/O read mode, the SI pin, SO pin, WP# and RESET# pin become SIO0 pin, SIO1 pin, SIO2 pin and SIO3 pin for address/dummy bits input and data output.

The MX25U80356 MXSMIO® (Serial Multi I/O) provides sequential read operation on the whole chip.

After program/erase command is issued, auto program/erase algorithms which program/erase and verify the specified page or sector/block locations will be executed. Program command is executed on byte basis, or page (256 bytes) basis, or word basis. Erase command is executed on 4K-byte sector, 32K-byte block, or 64K-byte block, or whole chip basis.

To provide user with ease of interface, a status register is included to indicate the status of the chip. The status read command can be issued to detect completion status of a program or erase operation via WIP bit.

Advanced security features enhance the protection and security functions, please refer to the security features section for more details.

When the device is not in operation and CS# is high, it will remain in standby mode.

The MX25U80356 utilizes Macronix's proprietary memory cell, which reliably stores memory contents even after 100,000 program and erase cycles.

Table 1. Read performance Comparison

Numbers of Dummy Cycles	Fast Read (MHz)	Dual Output Fast Read (MHz)	Quad Output Fast Read (MHz)	Dual IO Fast Read (MHz)	Quad IO Fast Read (MHz)	Quad IO Fast Read (QPI) (MHz)
4	-	-	-	104*	-	-
6	-	-	-	-	104*	104*
8	133*	133*	133*	133	-	-
10	-	-	-	-	133	133

Note: * Default status.

3. PIN CONFIGURATIONS

8-PIN SOP (150mil/200mil)

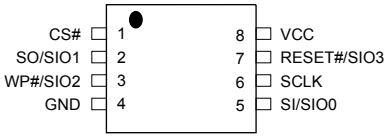

8-LAND XSON(4x4mm)/8-LAND USON (2x3mm)

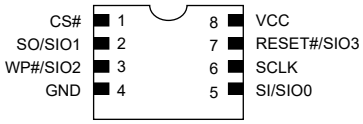

4. PIN DESCRIPTION

SYMBOL	DESCRIPTION
CS#	Chip Select
SI/SIO0	Serial Data Input (for 1 x I/O)/ Serial Data Input & Output (for 2xI/O or 4xI/O read mode)
SO/SIO1	Serial Data Output (for 1 x I/O)/ Serial Data Input & Output (for 2xI/O or 4xI/O read mode)
SCLK	Clock Input
WP#/SIO2	Write protection Active low or Serial Data Input & Output (for 4xI/O read mode)
RESET#/SIO3	Hardware Reset Pin Active low or Serial Data Input & Output (for 4xI/O read mode)
VCC	+ 1.8V Power Supply
GND	Ground

Notes:
The pin of RESET#/SIO3 or WP#/SIO2 will remain internal pull up function while this pin is not physically connected in system configuration.
However, the internal pull up function will be disabled if the system has physical connection to RESET#/SIO3 or WP#/SIO2 pin.

5. BLOCK DIAGRAM

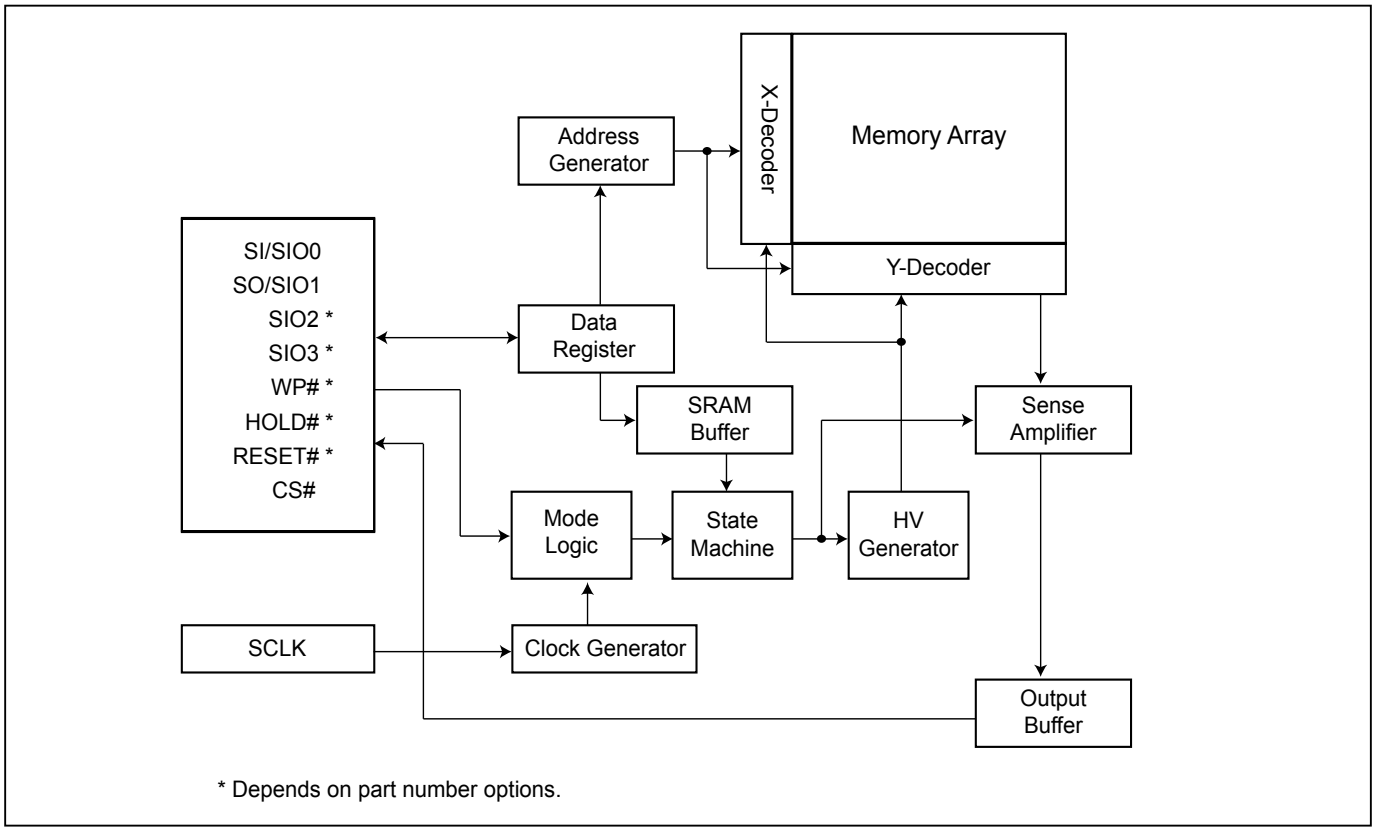

6. DATA PROTECTION

During power transition, there may be some false system level signals which result in inadvertent erasure or programming. The device is designed to protect itself from these accidental write cycles.

The state machine will be reset as standby mode automatically during power up. In addition, the control register architecture of the device constrains that the memory contents can only be changed after specific command sequences have completed successfully.

In the following, there are several features to protect the system from the accidental write cycles during VCC power-up and power-down or from system noise.

- Valid command length checking: The command length will be checked whether it is at byte base and completed on byte boundary.
- Write Enable (WREN) command: WREN command is required to set the Write Enable Latch bit (WEL) before other commands to change data.
- Deep Power Down Mode: By entering deep power down mode, the flash device is under protected from writing all commands except toggling the CS#. For more details, please refer to *"9-27. Deep Power-down (DP)"*.
- Advanced Security Features: there are some protection and security features which protect content from inadvertent write and hostile access.

I. Block lock protection

- The Software Protected Mode (SPM) use (BP3, BP2, BP1, BP0 and T/B) bits to allow part of memory to be protected as read only. The protected area definition is shown as *"Table 2. Protected Area Sizes"*, the protected areas are more flexible which may protect various area by setting value of BP0-BP3 bits.
- The Hardware Protected Mode (HPM) use WP#/SIO2 to protect the (BP3, BP2, BP1, BP0) bits and Status Register Write Protect bit.
- In four I/O and QPI mode, the feature of HPM will be disabled.

Table 2. Protected Area Sizes

Protected Area Sizes (TB bit = 0)

Status bit				Protect Level
BP3	BP2	BP1	BP0	8Mb
0	0	0	0	0 (none)
0	0	0	1	1 (1block, block 15th)
0	0	1	0	2 (2blocks, block 14th-15th)
0	0	1	1	3 (4blocks, block 12nd-15th)
0	1	0	0	4 (8blocks, block 8th-15th)
0	1	0	1	5 (16blocks, protect all)
0	1	1	0	6 (16blocks, protect all)
0	1	1	1	7 (16blocks, protect all)
1	0	0	0	8 (16blocks, protect all)
1	0	0	1	9 (16blocks, protect all)
1	0	1	0	10 (16blocks, protect all)
1	0	1	1	11 (16blocks, protect all)
1	1	0	0	12 (16blocks, protect all)
1	1	0	1	13 (16blocks, protect all)
1	1	1	0	14 (16blocks, protect all)
1	1	1	1	15 (16blocks, protect all)

Protected Area Sizes (TB bit = 1)

Status bit				Protect Level
BP3	BP2	BP1	BP0	8Mb
0	0	0	0	0 (none)
0	0	0	1	1 (1block, block 0th)
0	0	1	0	2 (2blocks, block 0th-1st)
0	0	1	1	3 (4blocks, block 0th-3rd)
0	1	0	0	4 (8blocks, block 0th-7th)
0	1	0	1	5 (16blocks, protect all)
0	1	1	0	6 (16blocks, protect all)
0	1	1	1	7 (16blocks, protect all)
1	0	0	0	8 (16blocks, protect all)
1	0	0	1	9 (16blocks, protect all)
1	0	1	0	10 (16blocks, protect all)
1	0	1	1	11 (16blocks, protect all)
1	1	0	0	12 (16blocks, protect all)
1	1	0	1	13 (16blocks, protect all)
1	1	1	0	14 (16blocks, protect all)
1	1	1	1	15 (16blocks, protect all)

Note: The device is ready to accept a Chip Erase instruction if, and only if, all Block Protect (BP3, BP2, BP1, BP0) are 0.

II. **Additional 8K-bit secured OTP** for an unique identifier to provide an 8K-bit one-time program area for setting a device unique serial number. This may be accomplished in the factory or by an end systems customer.

The 8K-bit secured OTP area is composed of two rows of 4K-bit. Customer could lock the first 4K-bit OTP area and factory could lock the other.

- Security register bit 0 indicates whether the second 4K-bit is locked by factory or not.

- Customer may lock-down the customer lockable secured OTP by writing WRSCUR(write security register) command to set customer lock-down bit1 as "1". Please refer to *"Table 11. Security Register Definition"* for security register bit definition and *"Table 3. 8K-bit Secured OTP Definition"* for address range definition.

- The 8K-bit secured OTP area is programmed by entering secured OTP mode (with the Enter Security OTP command), and going through a normal program procedure. Exiting secured OTP mode is done by issuing the Exit Security OTP command.

Note: Once lock-down whatever by factory or customer, the corresponding secured area cannot be changed any more. While in 8K-bit Secured OTP mode, array access is not allowed.

Table 3. 8K-bit Secured OTP Definition

Address range	Size	Customer Lock	Standard Factory Lock
xxx000-xxx1FF	4096-bit	Determined by customer	N/A
xxx200-xxx3FF	4096-bit	N/A	Determined by factory

7. Memory Organization

Table 4. Memory Organization

Block (64KB)	Block (32KB)	Sector (4KB)	Address Range	
15	31	255	0FF000h	0FFFFFh
	:	:	:	:
	30	240	0F0000h	0F0FFFh
14	29	239	0EF000h	0EFFFFh
	:	:	:	:
	28	224	0E0000h	0E0FFFh
13	27	223	0DF000h	0DFFFFh
	:	:	:	:
	26	208	0D0000h	0D0FFFh
12	25	207	0CF000h	0CFFFFh
	:	:	:	:
	24	192	0C0000h	0C0FFFh
11	23	191	0BF000h	0BFFFFh
	:	:	:	:
	22	176	0B0000h	0B0FFFh
10	21	175	0AF000h	0AFFFFh
	:	:	:	:
	20	160	0A0000h	0A0FFFh
9	19	159	09F000h	09FFFFh
	:	:	:	:
	18	144	090000h	090FFFh
8	17	143	08F000h	08FFFFh
	:	:	:	:
	16	128	080000h	080FFFh
7	15	127	07F000h	07FFFFh
	:	:	:	:
	14	112	070000h	070FFFh
6	13	111	06F000h	06FFFFh
	:	:	:	:
	12	96	060000h	060FFFh
5	11	95	05F000h	05FFFFh
	:	:	:	:
	10	80	050000h	050FFFh
4	9	79	04F000h	04FFFFh
	:	:	:	:
	8	64	040000h	040FFFh
3	7	63	03F000h	03FFFFh
	:	:	:	:
	6	48	030000h	030FFFh
2	5	47	02F000h	02FFFFh
	:	:	:	:
	4	32	020000h	020FFFh
1	3	31	01F000h	01FFFFh
	:	:	:	:
	2	16	010000h	010FFFh
0	1	15	00F000h	00FFFFh
	:	:	:	:
	0	2	002000h	002FFFh
		1	001000h	001FFFh
		0	000000h	000FFFh

8. DEVICE OPERATION

1. Before a command is issued, status register should be checked to ensure device is ready for the intended operation.

2. When an incorrect command is written to this device, it enters standby mode and stays in standby mode until the next CS# falling edge. In standby mode, This device's SO pin should be High-Z.

3. When a correct command is written to this device, it enters active mode and stays in active mode until the next CS# rising edge.

4. Input data is latched on the rising edge of Serial Clock (SCLK) and data shifts out on the falling edge of SCLK. The difference of Serial mode 0 and mode 3 is shown as *"Figure 1. Serial Modes Supported"*.

5. For the following instructions: RDID, RDSR, RDSCUR, READ, FAST_READ, 2READ, DREAD, 4READ, QREAD, W4READ, RDSFDP, RES, REMS, QPIID, RDCR the shifted-in instruction sequence is followed by a data-out sequence. After any bit of data being shifted out, the CS# can be high. For the following instructions: WREN, WRDI, WRSR, SE, BE32K, BE, CE, PP, 4PP, DP, ENSO, EXSO, WRSCUR, SUSPEND, RESUME, NOP, RSTEN, RST, EQIO, RSTQIO the CS# must go high exactly at the byte boundary; otherwise, the instruction will be rejected and not executed.

6. While a Write Status Register, Program, or Erase operation is in progress, access to the memory array is ignored and will not affect the current operation of Write Status Register, Program, or Erase.

Figure 1. Serial Modes Supported

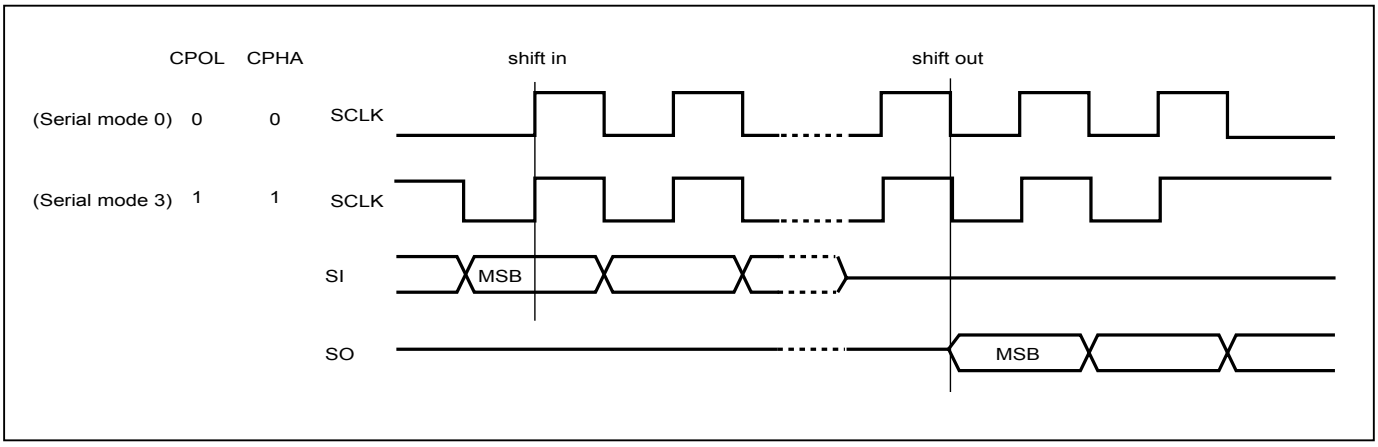

Note:
CPOL indicates clock polarity of Serial master, CPOL=1 for SCLK high while idle, CPOL=0 for SCLK low while not transmitting. CPHA indicates clock phase. The combination of CPOL bit and CPHA bit decides which Serial mode is supported.

Figure 2. Serial Input Timing

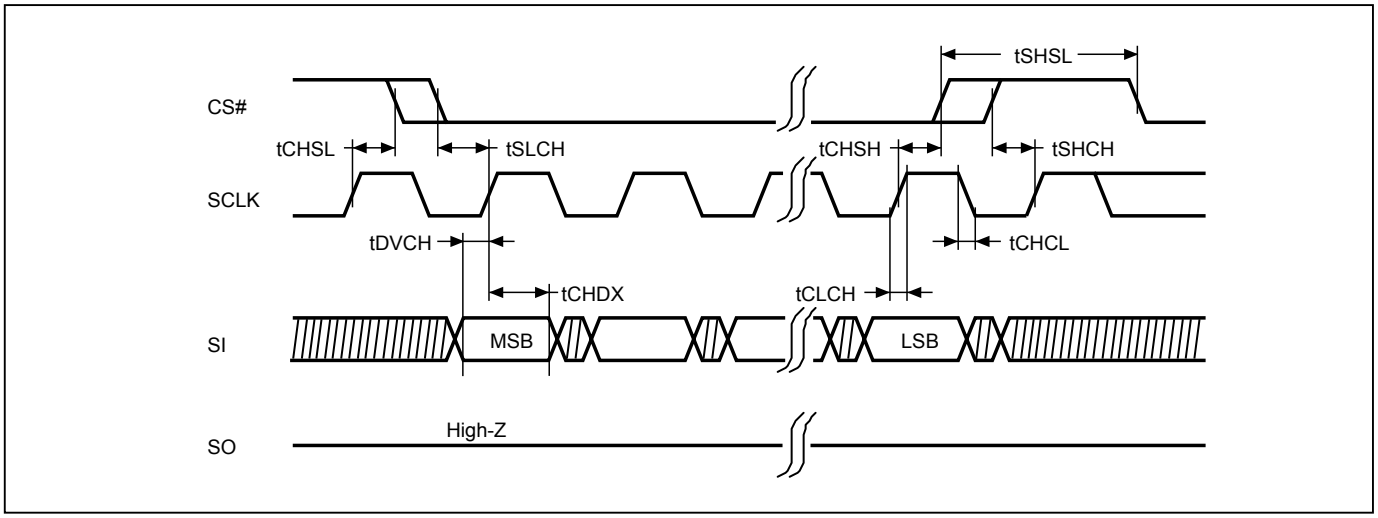

Figure 3. Output Timing

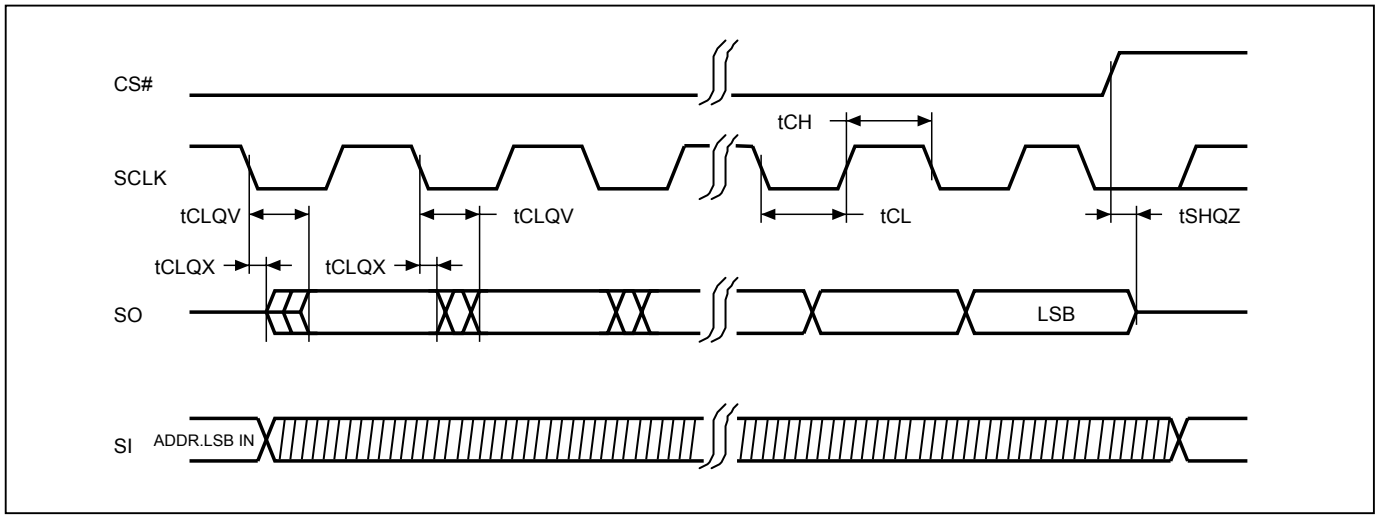

8-1. Quad Peripheral Interface (QPI) Read Mode

QPI protocol enables user to take full advantage of Quad I/O Serial NOR Flash by providing the Quad I/O interface in command cycles, address cycles and as well as data output cycles.

Enable QPI mode

By issuing EQIO command (35h), the QPI mode is enabled. After QPI mode has been enabled, the device enter quad mode (4-4-4) without QE bit status changed.

Figure 4. Enable QPI Sequence

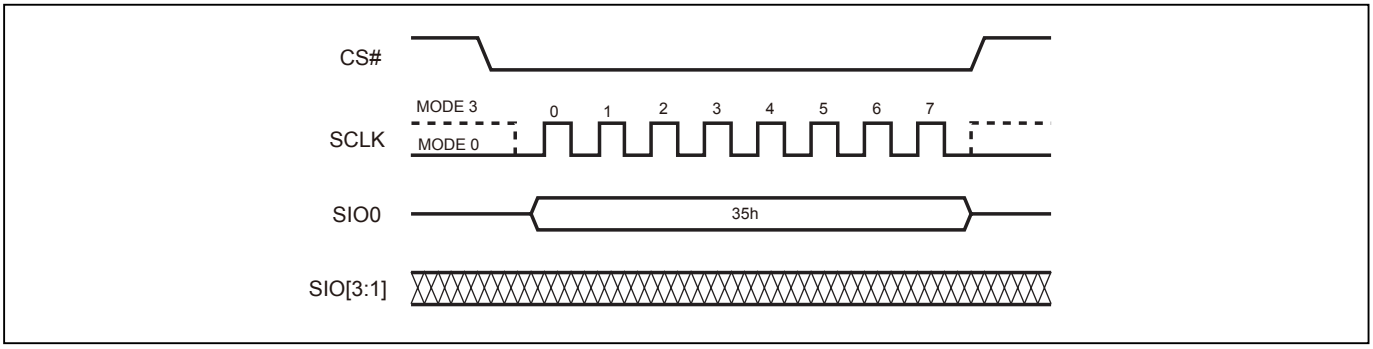

Reset QPI (RSTQIO)

To reset the QPI mode, the RSTQIO (F5h) command is required. After the RSTQIO command is issued, the device returns from QPI mode (4 I/O interface in command cycles) to SPI mode (1 I/O interface in command cycles).

Note:
For EQIO and RSTQIO commands, CS# high width has to follow "From Write/Erase/Program to Read Status Register" spec tSHSL (as defined in *"Table 21. AC CHARACTERISTICS"*) for next instruction.

Figure 5. Reset QPI Mode

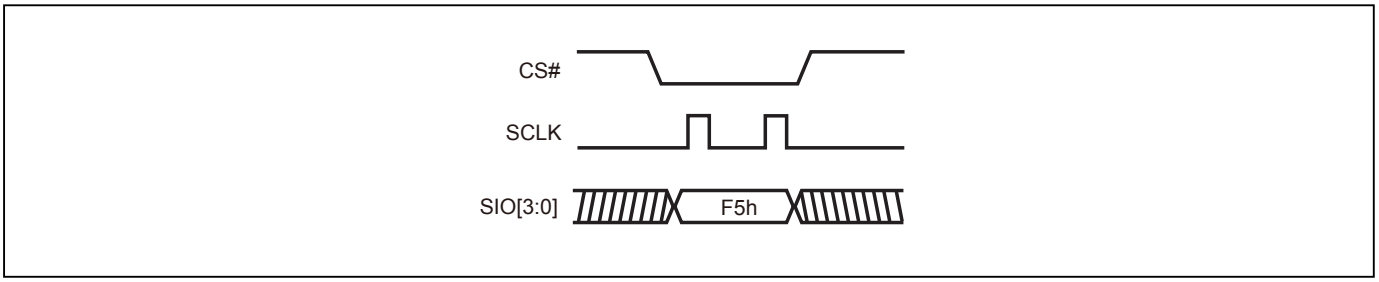

9. COMMAND DESCRIPTION

Table 5. Command Set

	Command Code	SPI	QPI	Address Byte					Dummy Cycle	Data Byte
				Total ADD Byte	Byte 1	Byte 2	Byte 3	Byte 4		
Array access										
READ (normal read)	03 (hex)	V		3	ADD1	ADD2	ADD3		0	1- ∞
FAST READ (fast read data)	0B (hex)	V	V	3	ADD1	ADD2	ADD3		8 *	1- ∞
2READ (2 x I/O read command)	BB (hex)	V		3	ADD1	ADD2	ADD3		4 *	1- ∞
DREAD (1I 2O read)	3B (hex)	V		3	ADD1	ADD2	ADD3		8 *	1- ∞
4READ (4 I/O read)	EB (hex)	V	V	3	ADD1	ADD2	ADD3		6 *	1- ∞
QREAD (1I 4O read)	6B (hex)	V		3	ADD1	ADD2	ADD3		8 *	1- ∞
W4READ (4 I/O read with 4 dummy cycles)	E7 (hex)	V		3	ADD1	ADD2	ADD3		4	1- ∞
PP (page program)	02 (hex)	V	V	3	ADD1	ADD2	ADD3		0	1-256
4PP (quad page program)	38 (hex)	V		3	ADD1	ADD2	ADD3		0	1-256
SE (sector erase)	20 (hex)	V	V	3	ADD1	ADD2	ADD3		0	0
BE 32K (block erase 32KB)	52 (hex)	V	V	3	ADD1	ADD2	ADD3		0	0
BE (block erase 64KB)	D8 (hex)	V	V	3	ADD1	ADD2	ADD3		0	0
CE (chip erase)	60 or C7 (hex)	V	V	0					0	0
Device operation										
WREN (write enable)	06 (hex)	V	V	0					0	0
WRDI (write disable)	04 (hex)	V	V	0					0	0
EQIO (Enable QPI)	35 (hex)	V		0					0	0
RSTQIO (Reset QPI)	F5 (hex)		V	0					0	0
PGM/ERS Suspend (Suspends Program/ Erase)	75 or B0 (hex)	V	V	0					0	0
PGM/ERS Resume (Resumes Program/ Erase)	7A or 30 (hex)	V	V	0					0	0
DP (Deep power down)	B9 (hex)	V	V	0					0	0
RDP (Release from deep power down)	AB (hex)	V	V	0					0	0

* Dummy cycle numbers will be different depending on the bit6 & bit 7 (DC0 & DC1) setting in configuration register.

	Command Code	SPI	QPI	Address Byte					Dummy Cycle	Data Byte
				Total ADD Byte	Byte 1	Byte 2	Byte 3	Byte 4		
NOP (No Operation)	00 (hex)	V	V	0					0	0
RSTEN (Reset Enable)	66 (hex) *(Note2)*	V	V	0					0	0
RST (Reset Memory)	99 (hex) *(Note2)*	V	V	0					0	0
FMEN (factory mode enable)	41 (hex)	V	V	0					0	0
Register Access										
RDID (read identification)	9F (hex)	V		0					0	3
RES (read electronic ID)	AB (hex)	V	V	0	Dummy	Dummy	Dummy		24	1
REMS (read electronic manufacturer & device ID)	90 (hex)	V		1	Dummy	Dummy	ADD *(Note 3)*		16	2
QPIID (QPI ID Read)	AF (hex)		V	0					0	3
RDSFDP (Read SFDP Table)	5A (hex)	V		3	ADD1	ADD2	ADD3		8	1- ∞
RDSR (read status register)	05 (hex)	V	V	0					0	1
RDCR (read configuration register)	15 (hex)	V	V	0					0	1
RDFMSR (Read Factory Mode Status Register)	44 (hex)	V	V	0					0	1
WRSR (write status/configuration register)	01 (hex)	V	V	0					0	1-2
RDSCUR (read security register)	2B (hex)	V	V	0					0	1
WRSCUR (write security register)	2F (hex)	V	V	0					0	0
SBL (Set Burst Length)	C0 (hex)	V	V	0					0	1
ENSO (enter secured OTP)	B1 (hex)	V	V	0					0	0
EXSO (exit secured OTP)	C1 (hex)	V	V	0					0	0

Note 1: It is not recommended to adopt any other code/address not in the command definition table, which will potentially enter the hidden mode.

Note 2: The RSTEN command must be executed before executing the RST command. If any other command is issued in-between RSTEN and RST, the RST command will be ignored.

Note 3: ADD=00H will output the manufacturer ID first and ADD=01H will output device ID first.

9-1. Write Enable (WREN)

The Write Enable (WREN) instruction sets the Write Enable Latch (WEL) bit. Instructions like PP, 4PP, SE, BE32K, BE, CE, and WRSR that are intended to change the device content, should be preceded by the WREN instruction.

The sequence of issuing WREN instruction is: CS# goes low→send WREN instruction code→ CS# goes high.

Both SPI (8 clocks) and QPI (2 clocks) command cycles can be accepted by this instruction. The SIO[3:1] are don't care in SPI mode.

Figure 6. Write Enable (WREN) Sequence (SPI Mode)

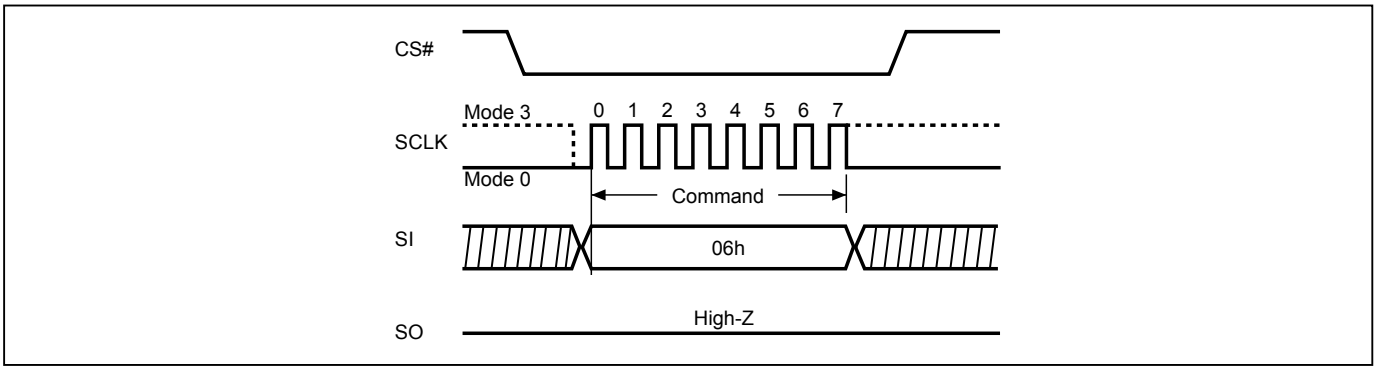

Figure 7. Write Enable (WREN) Sequence (QPI Mode)

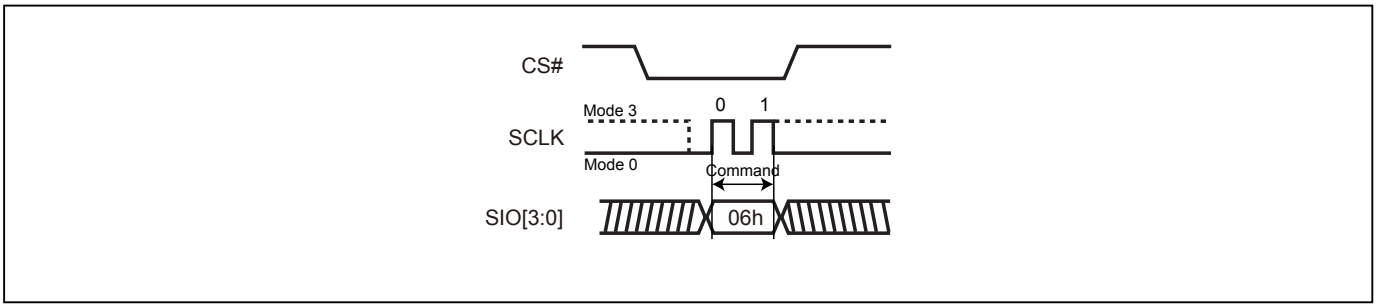

9-2. Write Disable (WRDI)

The Write Disable (WRDI) instruction resets the Write Enable Latch (WEL) bit.

The sequence of issuing WRDI instruction is: CS# goes low→send WRDI instruction code→CS# goes high.

Both SPI (8 clocks) and QPI (2 clocks) command cycles can be accepted by this instruction. The SIO[3:1] are don't care in SPI mode.

The WEL bit is reset in the following situations:

- Power-up
- Reset# pin driven low
- WRDI command completion
- WRSR command completion
- PP command completion
- 4PP command completion
- SE command completion
- BE32K command completion
- BE command completion
- CE command completion
- PGM/ERS Suspend command completion
- Softreset command completion
- WRSCUR command completion

Figure 8. Write Disable (WRDI) Sequence (SPI Mode)

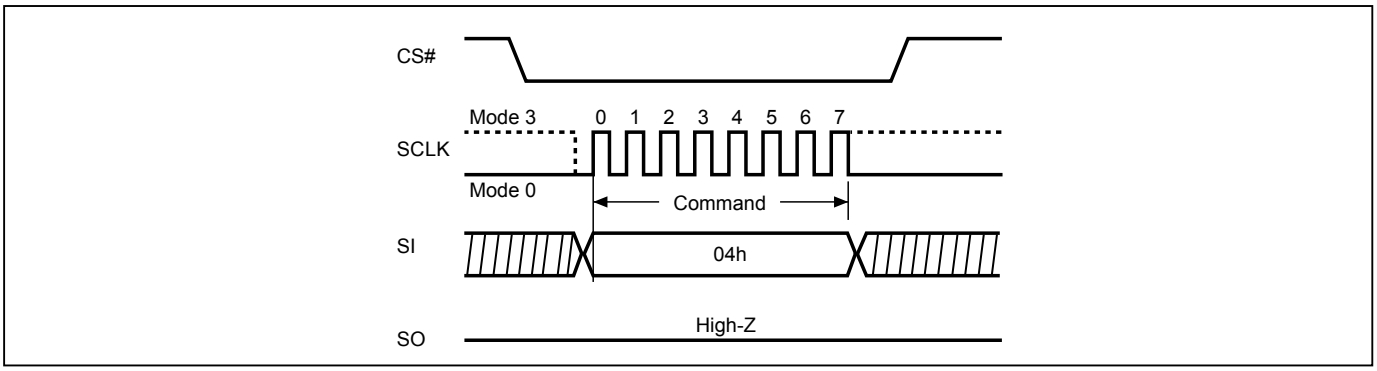

Figure 9. Write Disable (WRDI) Sequence (QPI Mode)

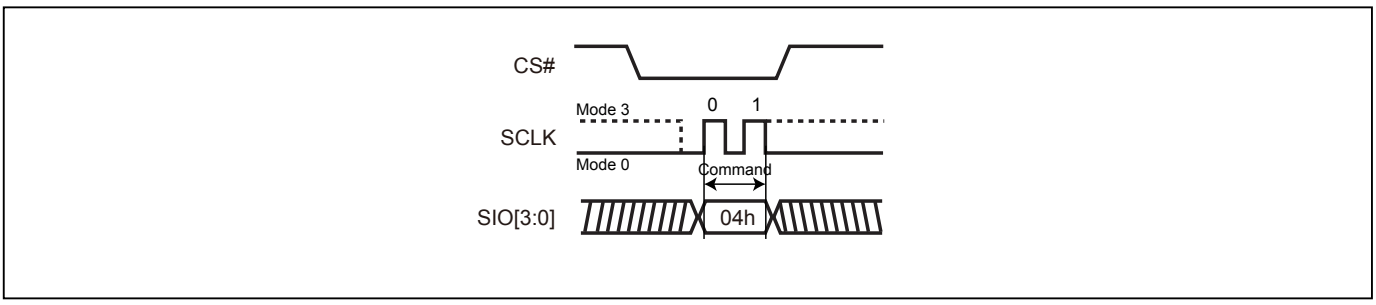

9-3. Factory Mode Enable (FMEN)

The Factory Mode Enable (FMEN) instruction enhances Program and Erase performance to increase factory production throughput. The FMEN instruction needs to be combined with the instructions which are intended to change the device content, like PP, 4PP, SE, BE32K, BE, and CE.

The sequence of issuing FMEN instruction is: CS# goes low→send FMEN instruction code→ CS# goes high. A valid factory mode operation needs to be included three sequences: WREN instruction → FMEN instruction→ Program or Erase instruction.

Suspend command is not acceptable under factory mode.

The FMEN is reset in the following situations

- Power-up
- Reset# pin driven low
- PP command completion
- 4PP command completion
- SE command completion
- BE32K command completion
- BE command completion
- CE command completion
- Softreset command completion

Both SPI (8 clocks) and QPI (2 clocks) command cycles can be accepted by this instruction. The SIO[3:1] are don't care in SPI mode.

Figure 10. Factory Mode Enable (FMEN) Sequence (SPI Mode)

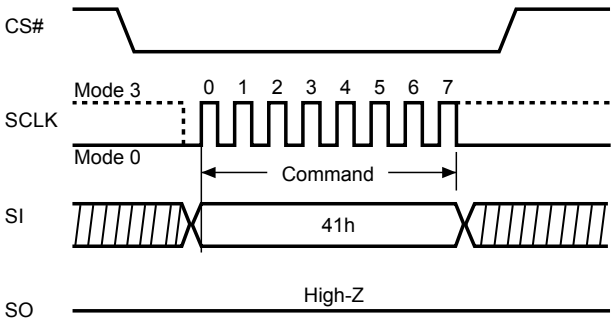

Figure 11. Factory Mode Enable (FMEN) Sequence (QPI Mode)

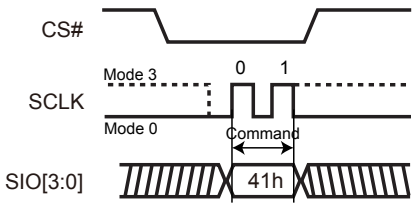

9-4. Read Identification (RDID)

The RDID instruction is for reading the 1-byte manufacturer ID and the 2-byte Device ID that follows. The Macronix Manufacturer ID and Device ID are listed as *"Table 6. ID Definitions"*.

The sequence of issuing RDID instruction is: CS# goes low→ send RDID instruction code→24-bits ID data out on SO→ to end RDID operation, drive CS# high at any time during data out.

While Program/Erase operation is in progress, it will not decode the RDID instruction, therefore there's no effect on the cycle of program/erase operation which is currently in progress. When CS# goes high, the device is at standby stage.

Figure 12. Read Identification (RDID) Sequence (SPI mode only)

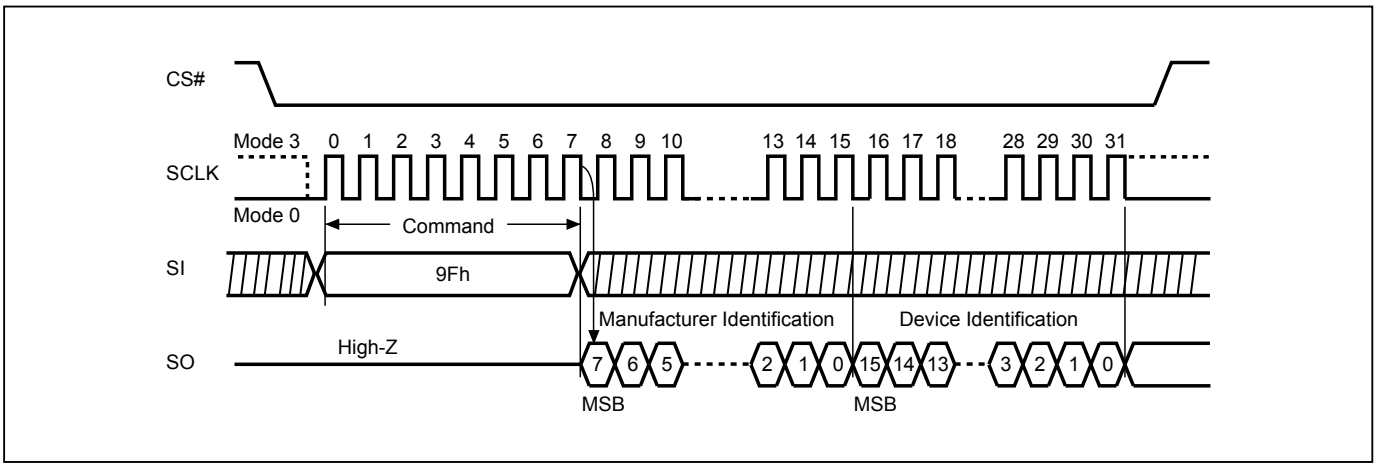

9-5. Read Electronic Signature (RES)

RES instruction is for reading out the old style of 8-bit Electronic Signature ID, whose values are shown as *"Table 6. ID Definitions"*. This is not the same as RDID instruction. It is not recommended to use for new design. For new design, please use RDID instruction.

Both SPI (8 clocks) and QPI (2 clocks) command cycle can be accepted by this instruction. The SIO[3:1] are don't care during SPI mode.

The RES instruction ends when CS# goes high, after the ID been read out at least once. The ID outputs repeatedly if continuously send the additional clock cycles on SCLK while CS# is at low.

Figure 13. Read Electronic Signature (RES) Sequence (SPI Mode)

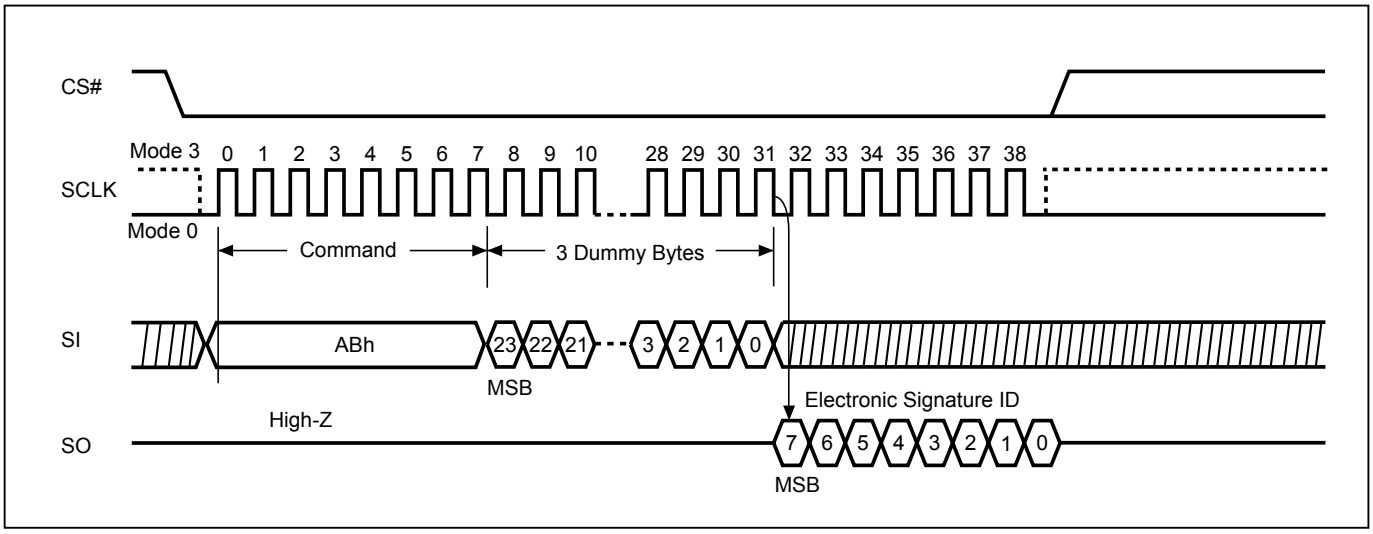

Figure 14. Read Electronic Signature (RES) Sequence (QPI Mode)

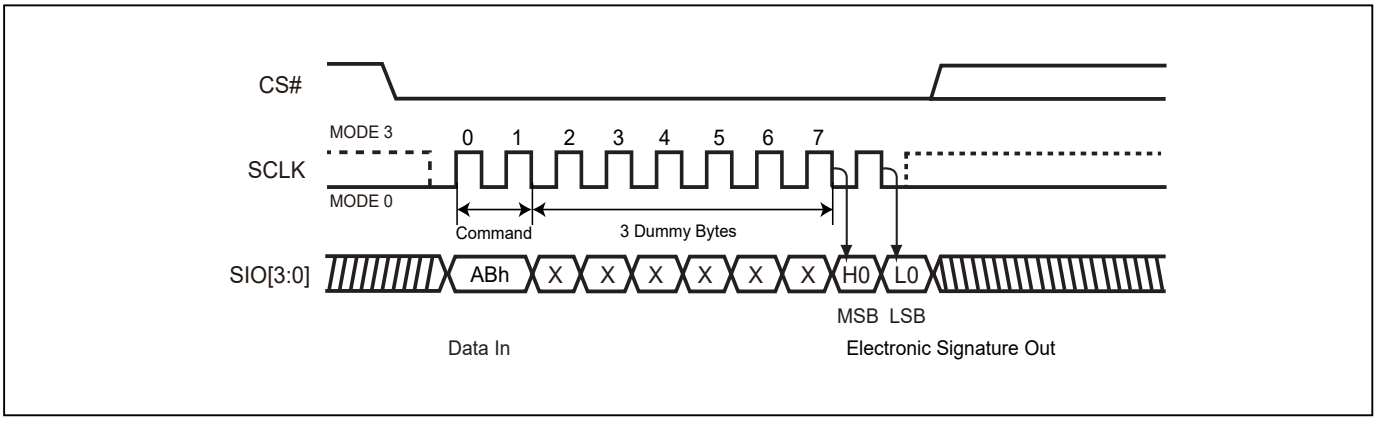

9-6. Read Electronic Manufacturer ID & Device ID (REMS)

The REMS instruction returns both the JEDEC assigned manufacturer ID and the device ID. The Device ID values are listed in *"Table 6. ID Definitions"*.

The REMS instruction is initiated by driving the CS# pin low and sending the instruction code "90h" followed by two dummy bytes and one address byte (A7-A0). After which the manufacturer ID for Macronix (C2h) and the device ID are shifted out on the falling edge of SCLK with the most significant bit (MSB) first. If the address byte is 00h, the manufacturer ID will be output first, followed by the device ID. If the address byte is 01h, then the device ID will be output first, followed by the manufacturer ID. While CS# is low, the manufacturer and device IDs can be read continuously, alternating from one to the other. The instruction is completed by driving CS# high.

Figure 15. Read Electronic Manufacturer & Device ID (REMS) Sequence (SPI Mode only)

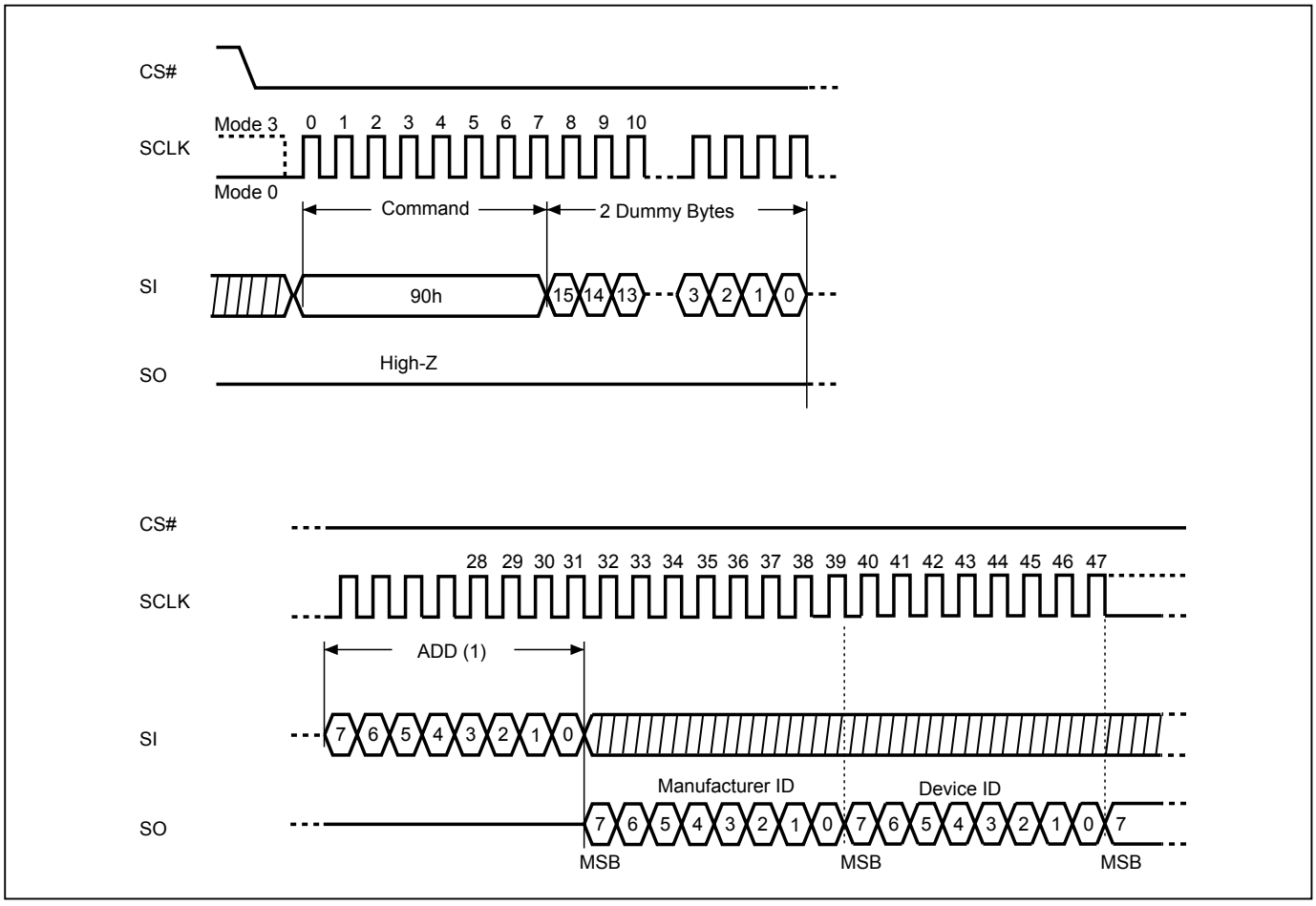

Note: (1) ADD=00H will output the manufacturer's ID first and ADD=01H will output device ID first.

9-7. QPI ID Read (QPIID)

The QPIID Read instruction can be used to identify the Device ID and Manufacturer ID. The sequence of issuing the QPIID instruction is as follows: CS# goes low→send QPI ID instruction→Data out on SO→CS# goes high. Most significant bit (MSB) first.

After the command cycle, the device will immediately output data on the falling edge of SCLK. The manufacturer ID, memory type, and memory density data byte will be output continuously, until the CS# goes high.

Table 6. ID Definitions

Command Type		MX25U80356		
RDID	9Fh	Manufacturer ID	Memory Type	Memory Density
		C2	25	34
RES	ABh	Electronic Signature ID		
		34		
REMS	90h	Manufacturer ID	Device ID	
		C2	34	
QPIID	AFh	Manufacturer ID	Memory Type	Memory Density
		C2	25	34

Figure 16. QPI ID Read (QPIID) Sequence (QPI Mode only)

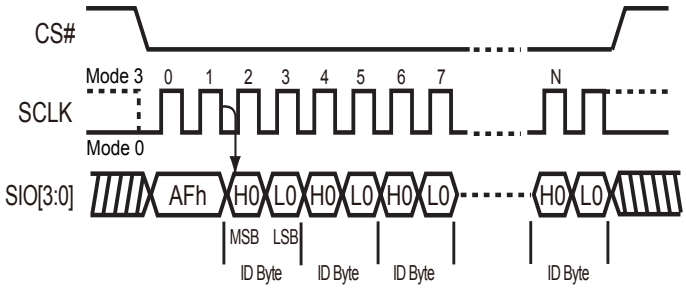

9-8. Read Status Register (RDSR)

The RDSR instruction is for reading Status Register Bits. The Read Status Register can be read at any time (even in program/erase/write status register condition). It is recommended to check the Write in Progress (WIP) bit before sending a new instruction when a program, erase, or write status register operation is in progress.

The sequence of issuing RDSR instruction is: CS# goes low→ send RDSR instruction code→ Status Register data out on SO.

Both SPI (8 clocks) and QPI (2 clocks) command cycles can be accepted by this instruction. The SIO[3:1] are don't care during SPI mode.

Figure 17. Read Status Register (RDSR) Sequence (SPI Mode)

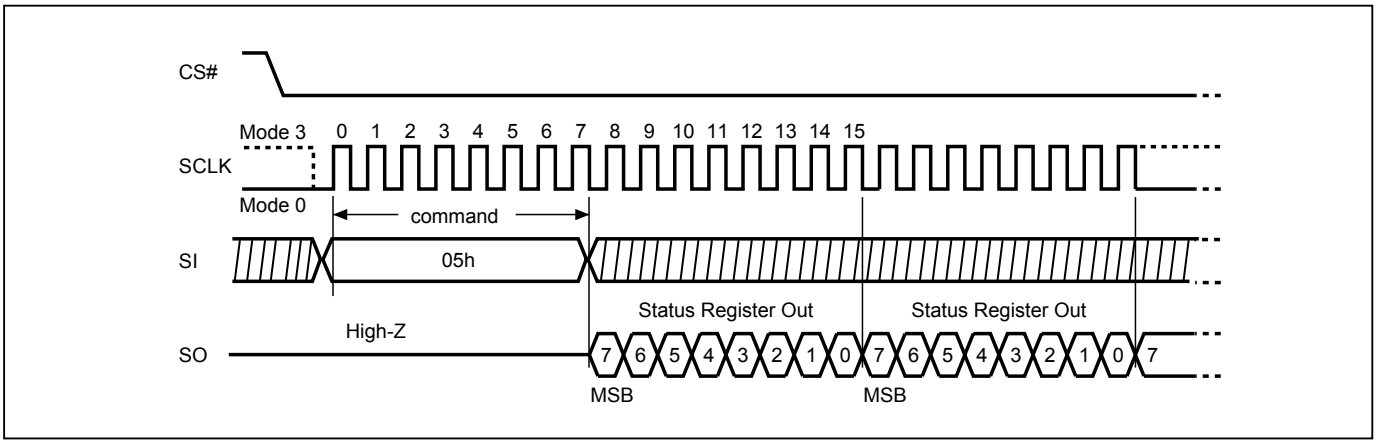

Figure 18. Read Status Register (RDSR) Sequence (QPI Mode)

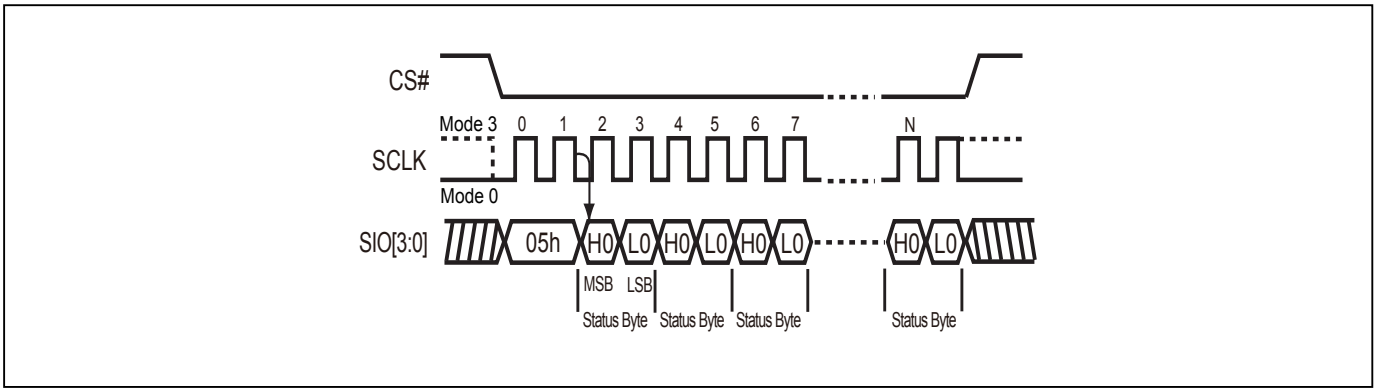

9-9. Read Configuration Register (RDCR)

The RDCR instruction is for reading Configuration Register Bits. The Read Configuration Register can be read at any time (even in program/erase/write configuration register condition). It is recommended to check the Write in Progress (WIP) bit before sending a new instruction when a program, erase, or write configuration register operation is in progress.

The sequence of issuing RDCR instruction is: CS# goes low→ send RDCR instruction code→ Configuration Register data out on SO.

Both SPI (8 clocks) and QPI (2 clocks) command cycles can be accepted by this instruction. The SIO[3:1] are don't care during SPI mode.

Figure 19. Read Configuration Register (RDCR) Sequence (SPI Mode)

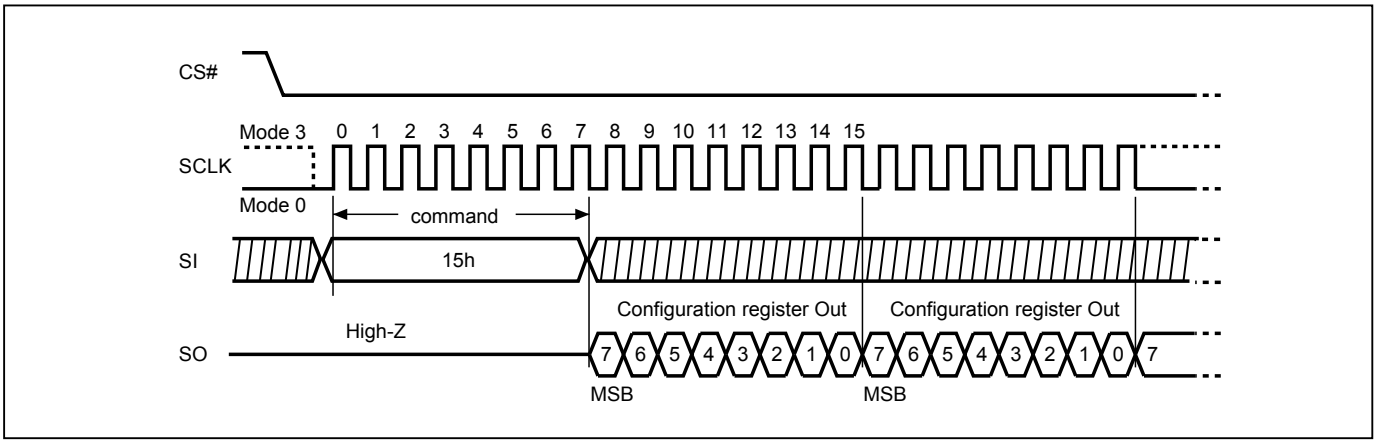

Figure 20. Read Configuration Register (RDCR) Sequence (QPI Mode)

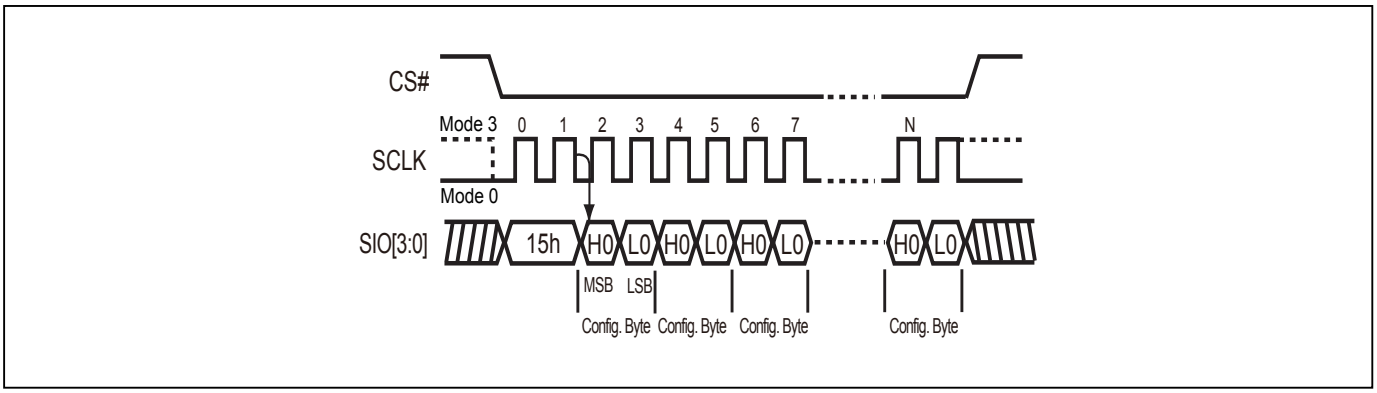

For user to check if Program/Erase operation is finished or not, RDSR instruction flow are shown as follows:

Figure 21. Program/Erase flow with read array data

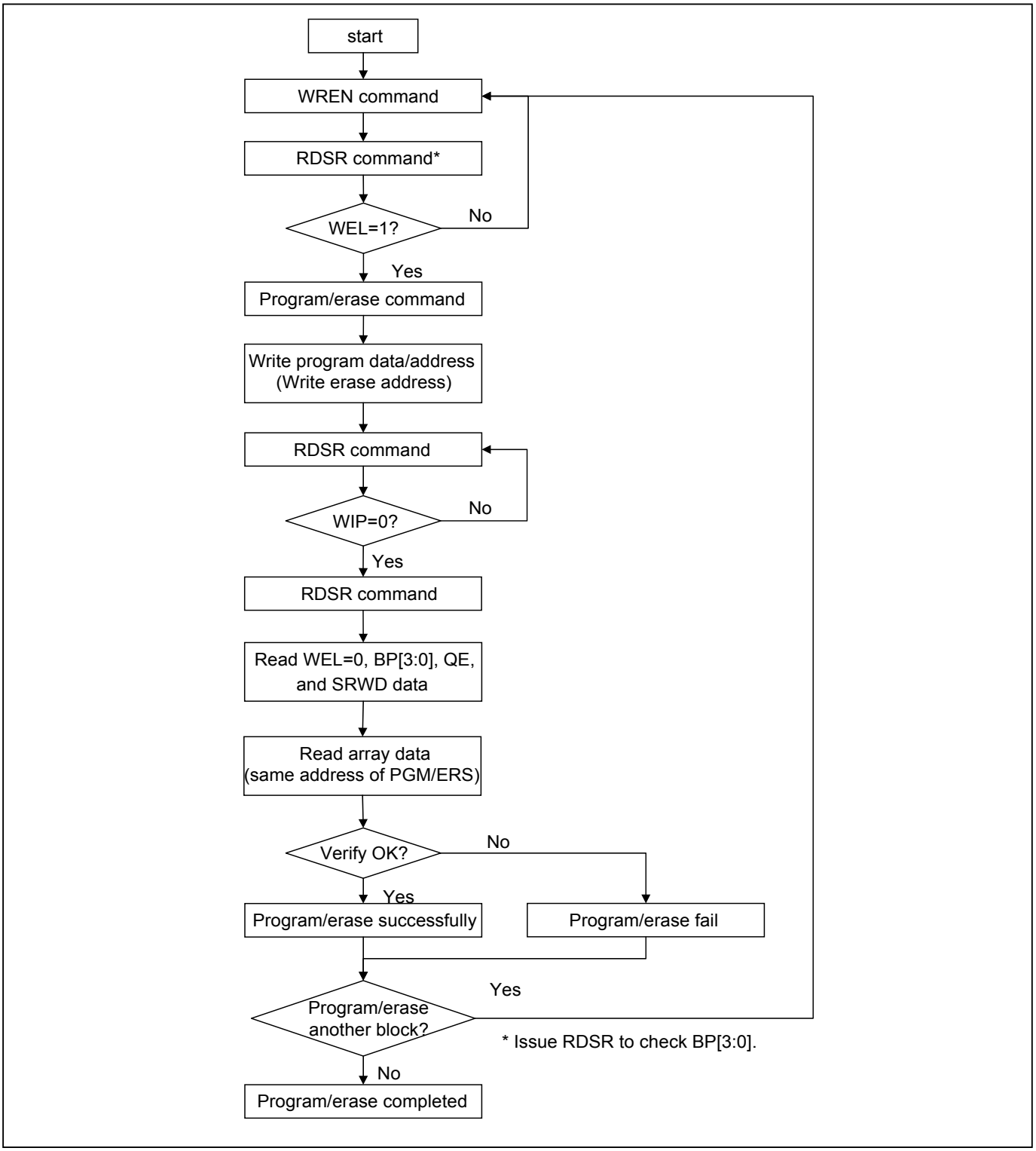

Figure 22. Program/Erase flow without read array data (read P_FAIL/E_FAIL flag)

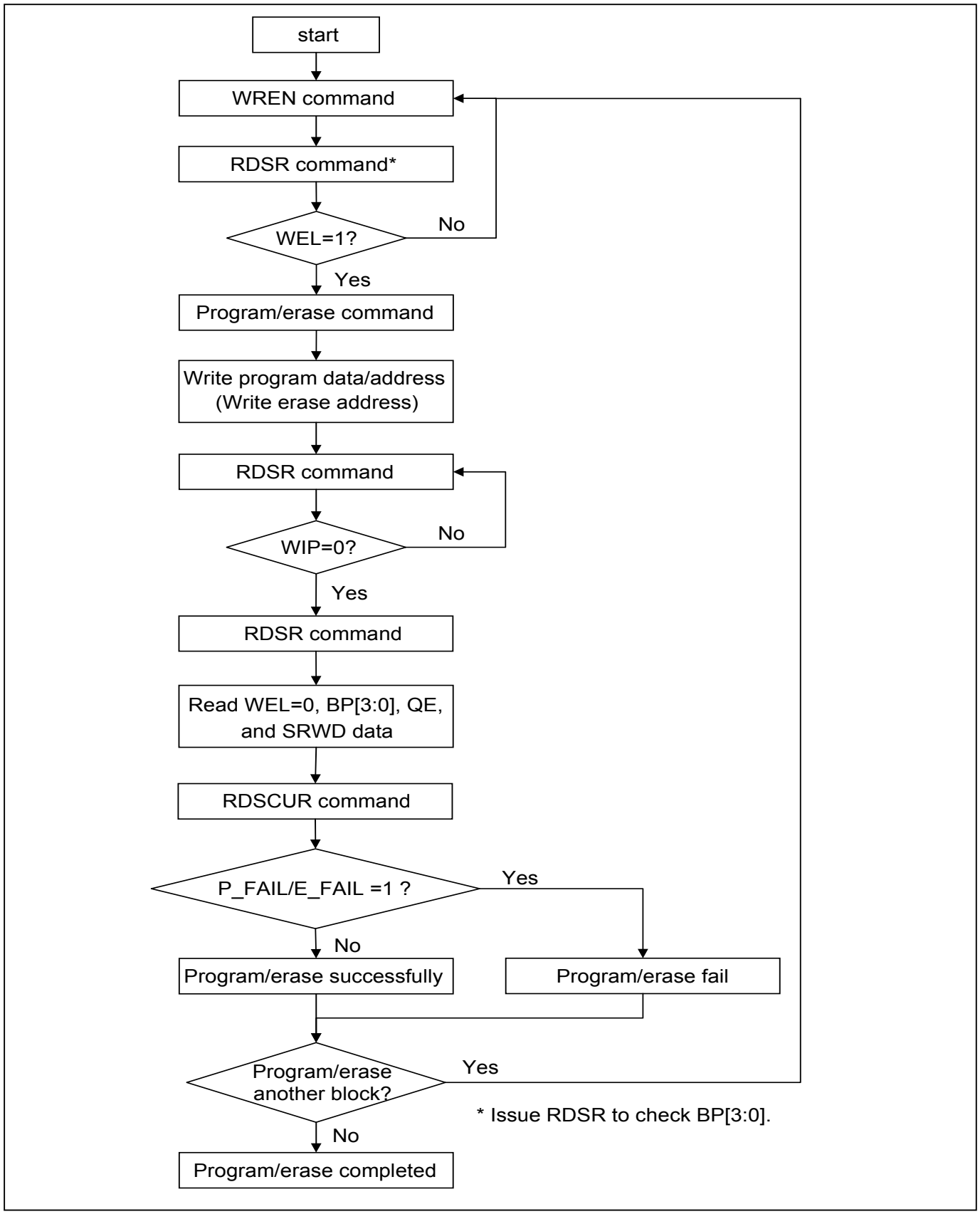

Status Register

The definition of the status register bits is as below:

WIP bit. The Write in Progress (WIP) bit, a volatile bit, indicates whether the device is busy in program/erase/write status register progress. When WIP bit sets to 1, which means the device is busy in program/erase/write status register progress. When WIP bit sets to 0, which means the device is not in progress of program/erase/write status register cycle.

WEL bit. The Write Enable Latch (WEL) bit is a volatile bit that is set to "1" by the WREN instruction. WEL needs to be set to "1" before the device can accept program and erase instructions, otherwise the program and erase instructions are ignored. WEL automatically clears to "0" when a program or erase operation completes. To ensure that both WIP and WEL are "0" and the device is ready for the next program or erase operation, it is recommended that WIP be confirmed to be "0" before checking that WEL is also "0". If a program or erase instruction is applied to a protected memory area, the instruction will be ignored and WEL will clear to "0".

BP3, BP2, BP1, BP0 bits. The Block Protect (BP3, BP2, BP1, BP0) bits, non-volatile bits, indicate the protected area (as defined in *"Table 2. Protected Area Sizes"*) of the device to against the program/erase instruction without hardware protection mode being set. To write the Block Protect (BP3, BP2, BP1, BP0) bits requires the Write Status Register (WRSR) instruction to be executed. Those bits define the protected area of the memory to against Page Program (PP), Sector Erase (SE), Block Erase 32KB (BE32K), Block Erase (BE) and Chip Erase (CE) instructions (only if Block Protect bits (BP3:BP0) set to 0, the CE instruction can be executed). The BP3, BP2, BP1, BP0 bits are "0" as default. Which is unprotected.

QE bit. The Quad Enable (QE) bit is a non-volatile bit with a factory default of "0". When QE is "0", Quad mode commands are ignored; pins WP#/SIO2 and RESET#/SIO3 function as WP# and RESET#, respectively. When QE is "1", Quad mode is enabled and Quad mode commands are supported along with Single and Dual mode commands. Pins WP#/SIO2 and RESET#/SIO3 function as SIO2 and SIO3, respectively, and their alternate pin functions are disabled. Enabling Quad mode also disables the HPM feature and the hardware RESET feature.

SRWD bit. The Status Register Write Disable (SRWD) bit, non-volatile bit, is operated together with Write Protection (WP#/SIO2) pin for providing hardware protection mode. The hardware protection mode requires SRWD sets to 1 and WP#/SIO2 pin signal is low stage. In the hardware protection mode, the Write Status Register (WRSR) instruction is no longer accepted for execution and the SRWD bit and Block Protect bits (BP3, BP2, BP1, BP0) are read only. The SRWD bit defaults to be "0".

Table 7. Status Register

bit7	bit6	bit5	bit4	bit3	bit2	bit1	bit0
SRWD (status register write protect)	QE (Quad Enabled)	BP3 (level of protected block)	BP2 (level of protected block)	BP1 (level of protected block)	BP0 (level of protected block)	WEL (write enable latch)	WIP (write in progress bit)
1=status register write disabled 0=status register write enabled	1=Quad Enabled 0=not Quad Enabled	*(note 1)*	*(note 1)*	*(note 1)*	*(note 1)*	1=write enabled 0=not write enabled	1=write operation 0=not in write operation
Non-volatile bit	Non-volatile bit	Non-volatile bit	Non-volatile bit	Non-volatile bit	Non-volatile bit	volatile bit	volatile bit

Note 1: Please refer to the *"Table 2. Protected Area Sizes"*.

Configuration Register

The Configuration Register is able to change the default status of Flash memory. Flash memory will be configured after the CR bit is set.

TB bit

The Top/Bottom (TB) bit is a non-volatile OTP bit. The Top/Bottom (TB) bit is used to configure the Block Protect area by BP bit (BP3, BP2, BP1, BP0), starting from TOP or Bottom of the memory array. The TB bit is defaulted as "0", which means Top area protect. When it is set as "1", the protect area will change to Bottom area of the memory device. To write the TB bits requires the Write Status Register (WRSR) instruction to be executed.

Table 8. Configuration Register Table

bit7	bit6	bit5	bit4	bit3	bit2	bit1	bit0
Reserved	DC (Dummy cycle)	Reserved	Reserved	TB (top/bottom selected)	Reserved	Reserved	Reserved
x	*(note 1)*	x	x	0=Top area protect 1=Bottom area protect (Default=0)	x	x	x
x	volatile bit	x	x	OTP	x	x	x

Note 1: Please refer to *"Table 9. Dummy Cycle and Frequency Table (MHz)"*.

Table 9. Dummy Cycle and Frequency Table (MHz)

DC[1:0]	Numbers of Dummy clock cycles	Fast Read	Dual Output Fast Read	Quad Output Fast Read
0 (default)	8	133	133	133
1	8	133	133	133

DC[1:0]	Numbers of Dummy clock cycles	Dual IO Fast Read
0 (default)	4	104
1	8	133

DC[1:0]	Numbers of Dummy clock cycles	Quad IO Fast Read	Quad IO Fast Read (QPI)
0 (default)	6	104	104
1	10	133	133

9-10. Write Status Register (WRSR)

The WRSR instruction is for changing the values of Status Register Bits and Configuration Register Bits. Before sending WRSR instruction, the Write Enable (WREN) instruction must be decoded and executed to set the Write Enable Latch (WEL) bit in advance. The WRSR instruction can change the value of Block Protect (BP3, BP2, BP1, BP0) bits to define the protected area of memory (as shown in *"Table 2. Protected Area Sizes"*). The WRSR also can set or reset the Quad enable (QE) bit and set or reset the Status Register Write Disable (SRWD) bit in accordance with Write Protection (WP#/SIO2) pin signal, but has no effect on bit1(WEL) and bit0 (WIP) of the status register. The WRSR instruction cannot be executed once the Hardware Protected Mode (HPM) is entered.

The sequence of issuing WRSR instruction is: CS# goes low→ send WRSR instruction code→ Status Register data on SI→Configuration Register data on SI→CS# goes high.

The CS# must go high exactly at the 8 bits or 16 bits data boundary; otherwise, the instruction will be rejected and not executed. The self-timed Write Status Register cycle time (tW) is initiated as soon as Chip Select (CS#) goes high. The Write in Progress (WIP) bit still can be check out during the Write Status Register cycle is in progress. The WIP sets 1 during the tW timing, and sets 0 when Write Status Register Cycle is completed, and the Write Enable Latch (WEL) bit is reset.

Both SPI (8 clocks) and QPI (2 clocks) command cycles can be accepted by this instruction. The SIO[3:1] are don't care during SPI mode.

Figure 23. Write Status Register (WRSR) Sequence (SPI Mode)

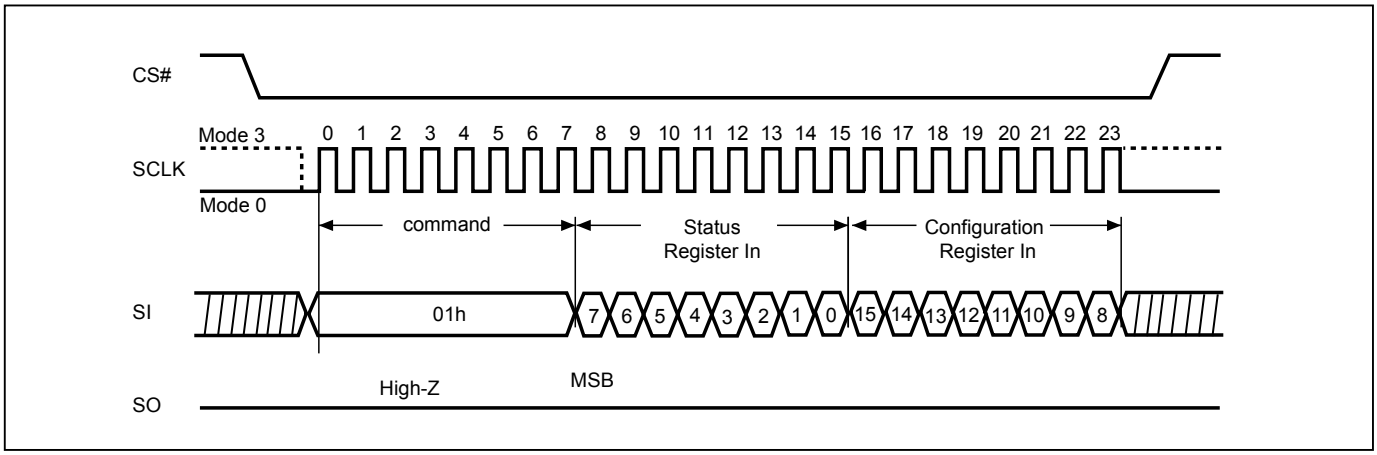

Note : The CS# must go high exactly at 8 bits or 16 bits data boundary to completed the write register command.

Figure 24. Write Status Register (WRSR) Sequence (QPI Mode)

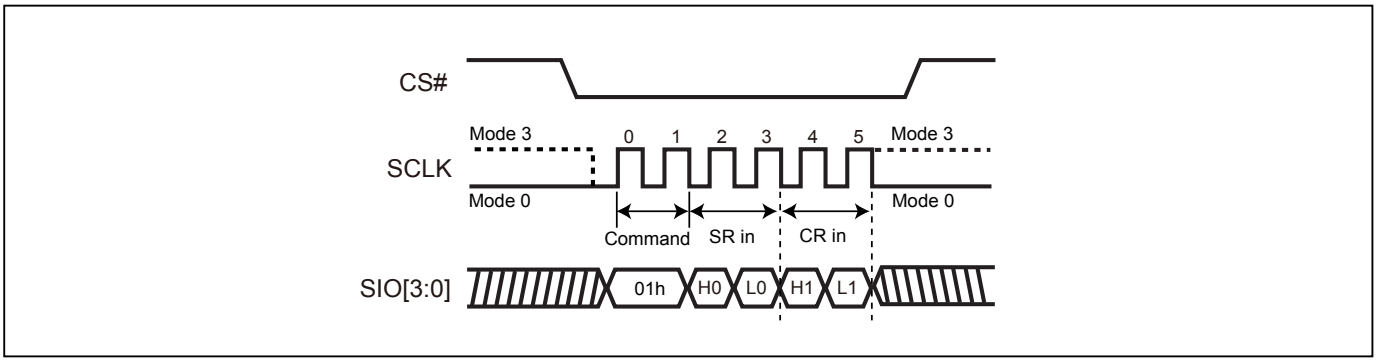

Software Protected Mode (SPM):

- When SRWD bit=0, no matter WP#/SIO2 is low or high, the WREN instruction may set the WEL bit and can change the values of SRWD, BP3, BP2, BP1, BP0. The protected area, which is defined by BP3, BP2, BP1, BP0 and T/B bit, is at software protected mode (SPM).
- When SRWD bit=1 and WP#/SIO2 is high, the WREN instruction may set the WEL bit can change the values of SRWD, BP3, BP2, BP1, BP0. The protected area, which is defined by BP3, BP2, BP1, BP0 and T/B bit, is at software protected mode (SPM)

Note:

If SRWD bit=1 but WP#/SIO2 is low, it is impossible to write the Status Register even if the WEL bit has previously been set. It is rejected to write the Status Register and not be executed.

Hardware Protected Mode (HPM):

- When SRWD bit=1, and then WP#/SIO2 is low (or WP#/SIO2 is low before SRWD bit=1), it enters the hardware protected mode (HPM). The data of the protected area is protected by software protected mode by BP3, BP2, BP1, BP0 and T/B bit and hardware protected mode by the WP#/SIO2 to against data modification.

Note:

To exit the hardware protected mode requires WP#/SIO2 driving high once the hardware protected mode is entered. If the WP#/SIO2 pin is permanently connected to high, the hardware protected mode can never be entered; only can use software protected mode via BP3, BP2, BP1, BP0 and T/B bit.
If the system enter QPI or set QE=1, the feature of HPM will be disabled.

Table 10. Protection Modes

Mode	Status register condition	WP# and SRWD bit status	Memory
Software protection mode (SPM)	Status register can be written in (WEL bit is set to "1") and the SRWD, BP0-BP3 bits can be changed	WP#=1 and SRWD bit=0, or WP#=0 and SRWD bit=0, or WP#=1 and SRWD=1	The protected area cannot be programmed or erased.
Hardware protection mode (HPM)	The SRWD, BP0-BP3 of status register bits cannot be changed	WP#=0, SRWD bit=1	The protected area cannot be programmed or erased.

Note:

1. As defined by the values in the Block Protect (BP3, BP2, BP1, BP0) bits of the Status Register, as shown in *"Table 2. Protected Area Sizes"*.

Figure 25. WRSR flow

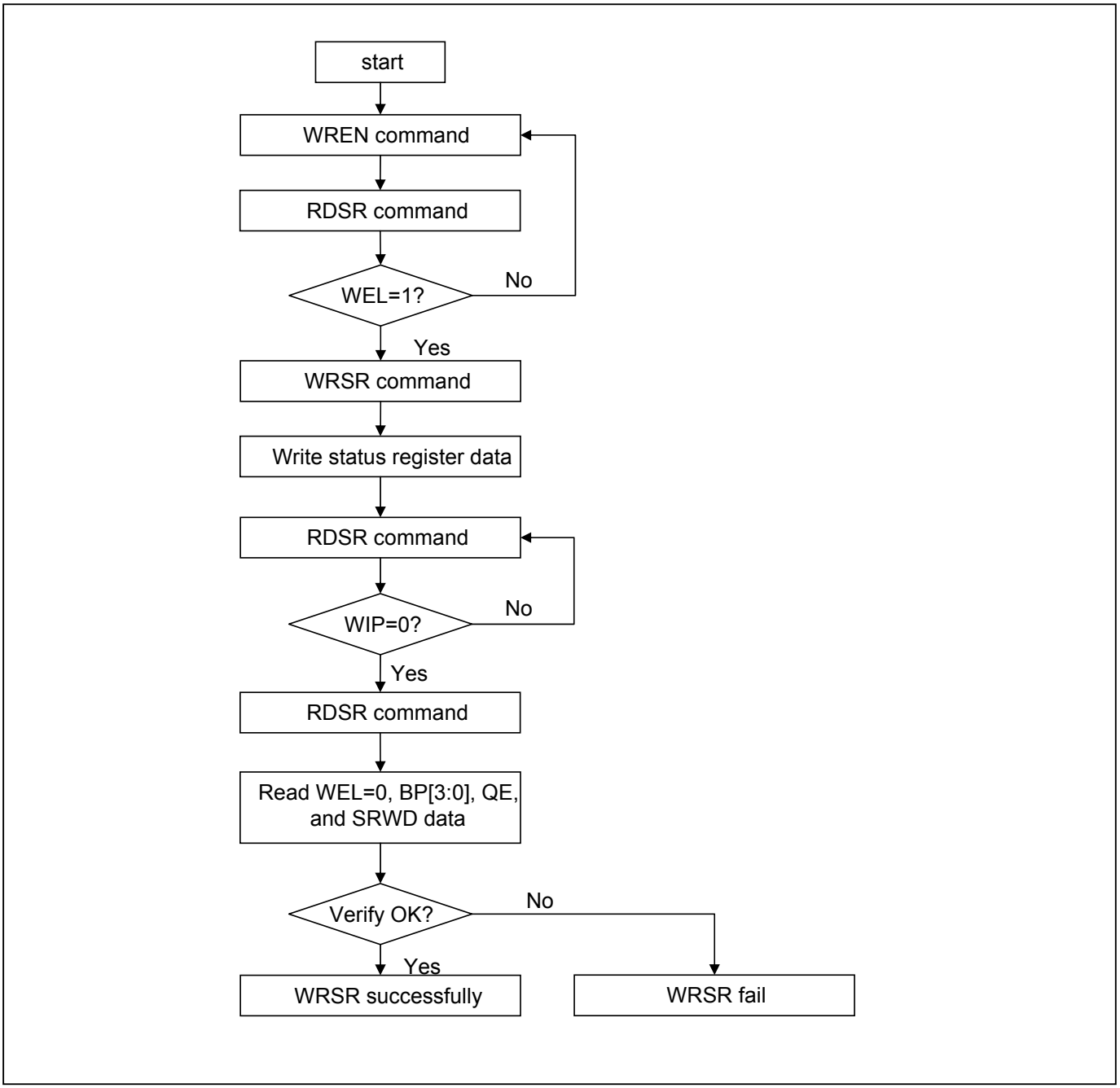

Figure 26. WP# Setup Timing and Hold Timing during WRSR when SRWD=1

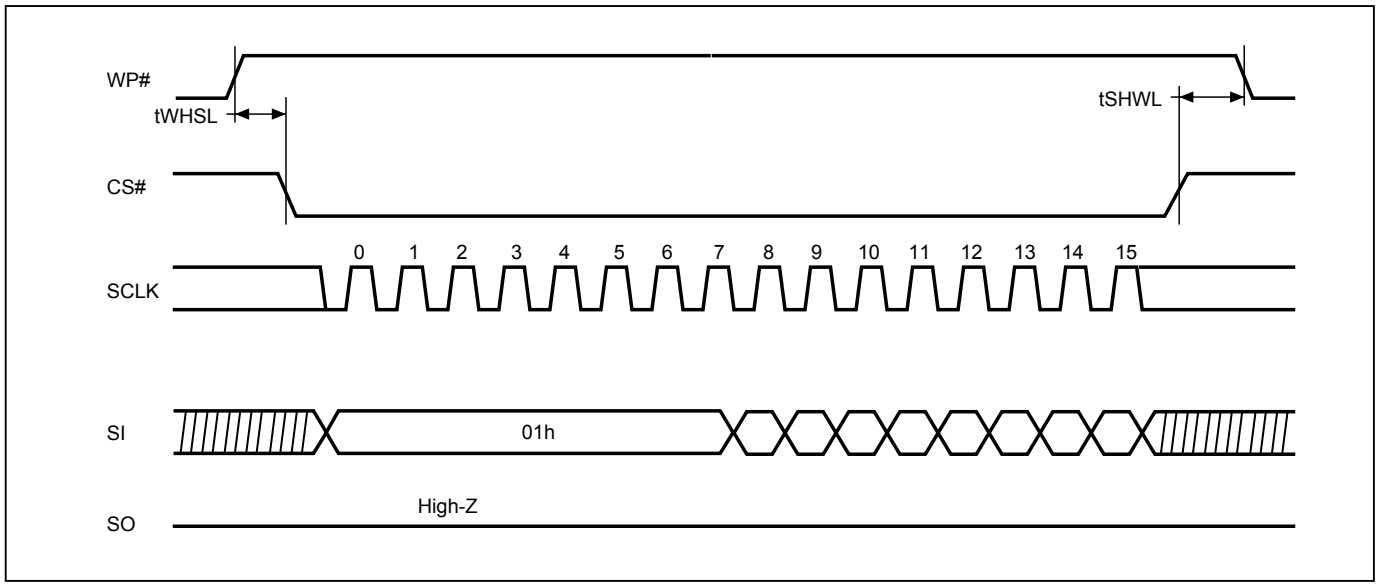

Note: WP# must be kept high until the embedded operation finish.

9-11. Read Data Bytes (READ)

The read instruction is for reading data out. The address is latched on rising edge of SCLK, and data shifts out on the falling edge of SCLK at a maximum frequency fR. The first address byte can be at any location. The address is automatically increased to the next higher address after each byte data is shifted out, so the whole memory can be read out at a single READ instruction. The address counter rolls over to 0 when the highest address has been reached.

The sequence of issuing READ instruction is: CS# goes low→send READ instruction code→ 3-byte address on SI→ data out on SO→to end READ operation, drive CS# high at any time during data out.

While Program/Erase/Write Status Register cycle is in progress, READ instruction is rejected without any impact on the Program/Erase/Write Status Register current cycle.

Figure 27. Read Data Bytes (READ) Sequence (SPI Mode only)

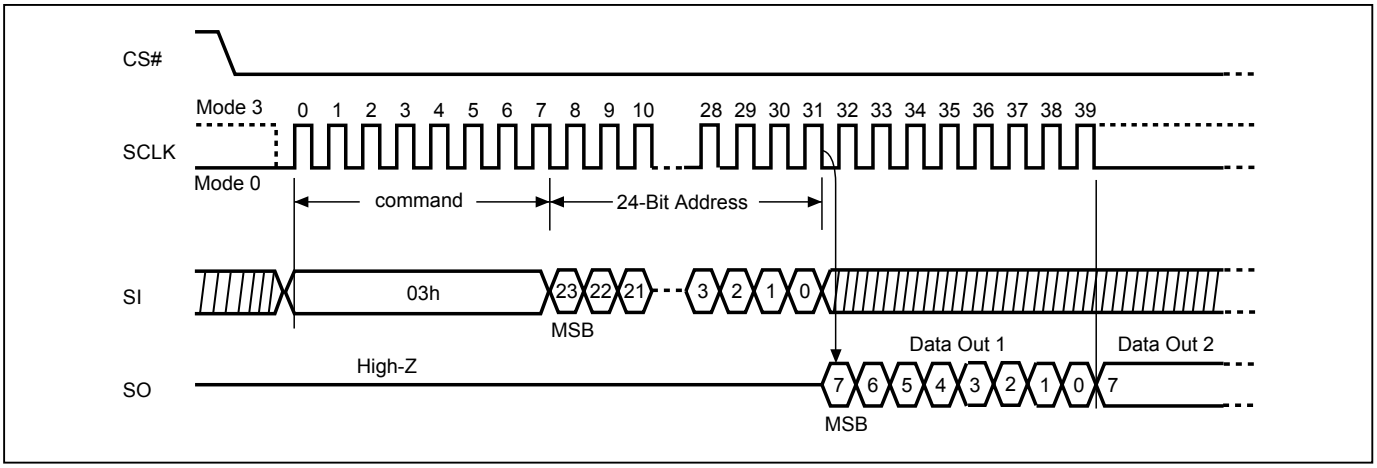

9-12. Read Data Bytes at Higher Speed (FAST_READ)

The FAST_READ instruction is for quickly reading data out. The address is latched on rising edge of SCLK, and data of each bit shifts out on the falling edge of SCLK at a maximum frequency fC. The first address byte can be at any location. The address is automatically increased to the next higher address after each byte data is shifted out, so the whole memory can be read out at a single FAST_READ instruction. The address counter rolls over to 0 when the highest address has been reached.

Read on SPI Mode The sequence of issuing FAST_READ instruction is: CS# goes low→ send FAST_READ instruction code→ 3-byte address on SI→8 dummy cycles (default) address on SI→ data out on SO→ to end FAST_READ operation, drive CS# high at any time during data out.

Read on QPI Mode The sequence of issuing FAST_READ instruction in QPI mode is: CS# goes low→ send FAST_READ instruction, 2 cycles→ 3-byte address interleave on SIO3, SIO2, SIO1 & SIO0→4 dummy cycles (default) address on SI→data out interleave on SIO3, SIO2, SIO1 & SIO0→ to end QPI FAST_READ operation, drive CS# high at any time during data out.

In the performance-enhancing mode, P[7:4] must be toggling with P[3:0]; likewise P[7:0]=A5h,5Ah,F0h or 0Fh can make this mode continue and reduce the next 4READ instruction. Once P[7:4] is no longer toggling with P[3:0]; likewise P[7:0]=FFh, 00h, AAh or 55h and afterwards CS# is raised and then lowered, the system then will escape from performance enhance mode and return to normal operation.

While Program/Erase/Write Status Register cycle is in progress, FAST_READ instruction is rejected without any impact on the Program/Erase/Write Status Register current cycle.

Figure 28. Read at Higher Speed (FAST_READ) Sequence (SPI Mode)

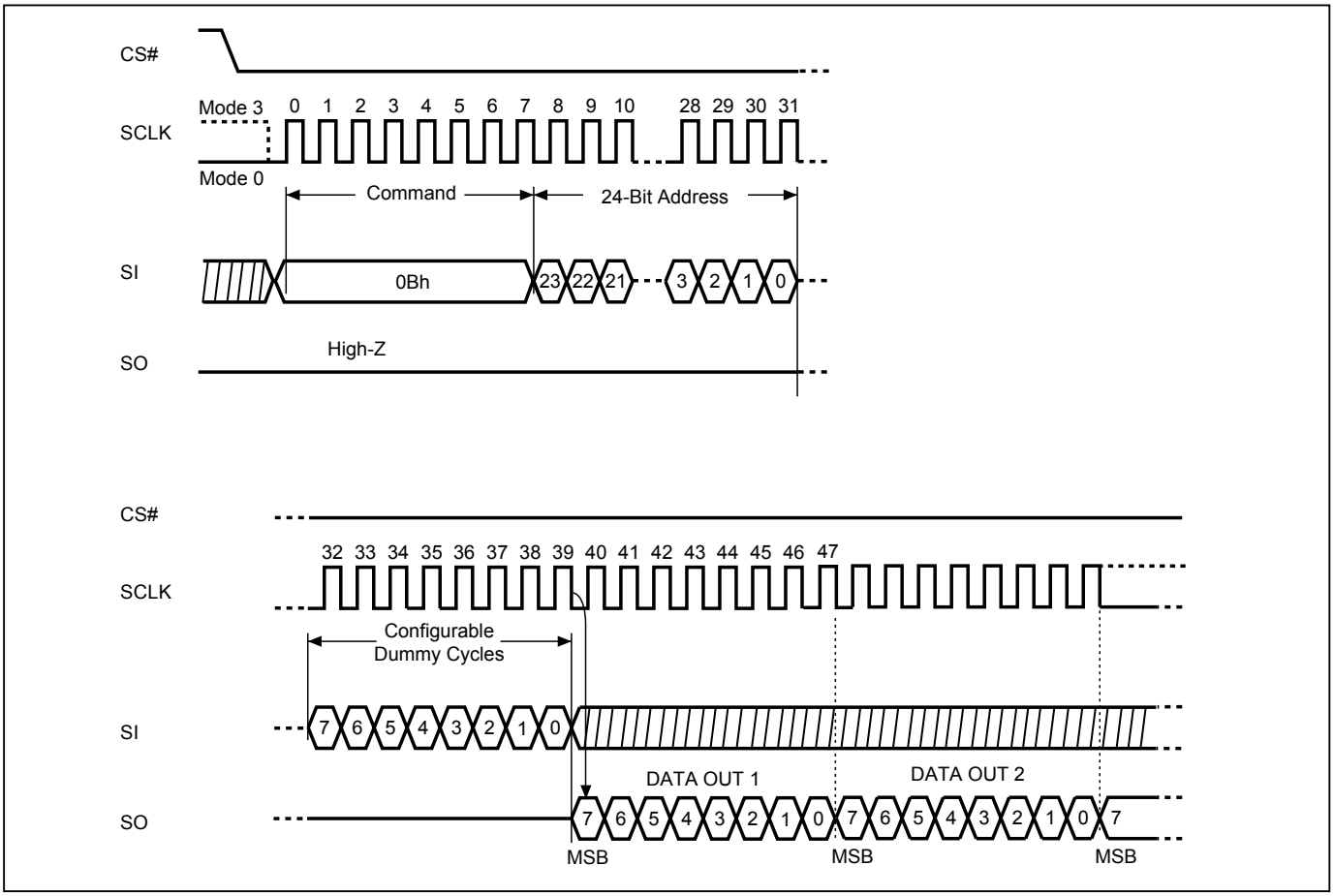

Note: Configuration Dummy cycle numbers will be different depending on the bit6 & bit 7 (DC0 & DC1) setting in configuration register.

Figure 29. Read at Higher Speed (FAST_READ) Sequence (QPI Mode)

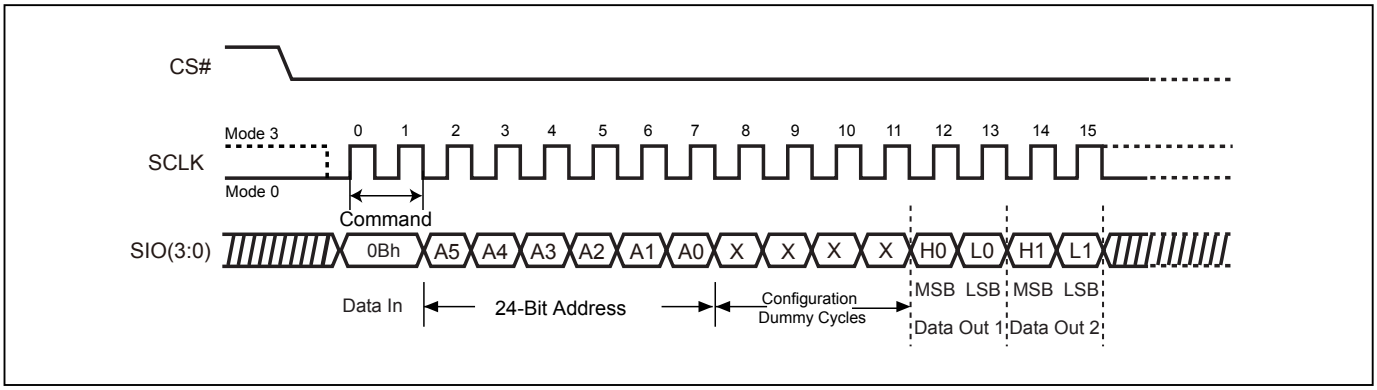

Note: Configuration Dummy cycle numbers will be different depending on the bit6 & bit 7 (DC0 & DC1) setting in configuration register.

9-13. Dual Output Read Mode (DREAD)

The DREAD instruction enables double throughput of the Serial NOR Flash in read mode. The address is latched on rising edge of SCLK, and data of every two bits (interleave on 2 I/O pins) shift out on the falling edge of SCLK at a maximum frequency fT. The first address byte can be at any location. The address is automatically increased to the next higher address after each byte data is shifted out, so the whole memory can be read out at a single DREAD instruction. The address counter rolls over to 0 when the highest address has been reached. Once writing DREAD instruction, the following data out will perform as 2-bit instead of previous 1-bit.

The sequence of issuing DREAD instruction is: CS# goes low→ send DREAD instruction→3-byte address on SIO0→ 8 dummy cycles (default) on SIO0→ data out interleave on SIO1 & SIO0→ to end DREAD operation, drive CS# high at any time during data out.

While Program/Erase/Write Status Register cycle is in progress, DREAD instruction is rejected without any impact on the Program/Erase/Write Status Register current cycle.

Figure 30. Dual Read Mode Sequence (SPI Mode only)

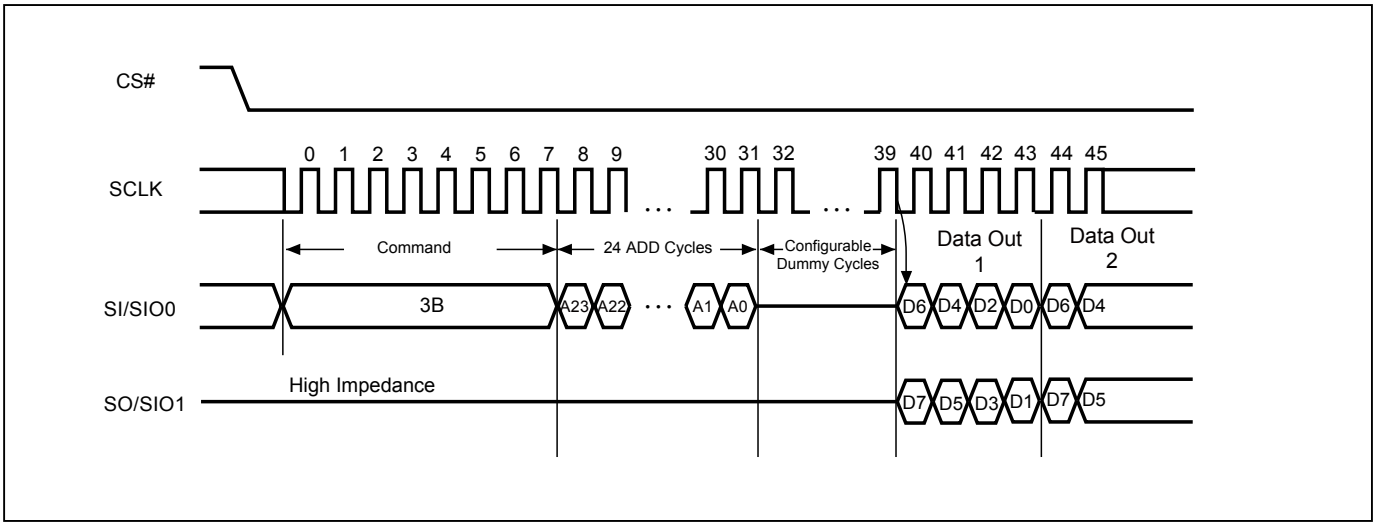

Note: Configuration Dummy cycle numbers will be different depending on the bit6 & bit 7 (DC0 & DC1) setting in configuration register.

9-14. 2 x I/O Read Mode (2READ)

The 2READ instruction enables double throughput of the Serial NOR Flash in read mode. The address is latched on rising edge of SCLK, and data of every two bits (interleave on 2 I/O pins) shift out on the falling edge of SCLK at a maximum frequency fT. The first address byte can be at any location. The address is automatically increased to the next higher address after each byte data is shifted out, so the whole memory can be read out at a single 2READ instruction. The address counter rolls over to 0 when the highest address has been reached. Once writing 2READ instruction, the following address/dummy/data out will perform as 2-bit instead of previous 1-bit.

The sequence of issuing 2READ instruction is: CS# goes low→ send 2READ instruction→ 3-byte address interleave on SIO1 & SIO0→ 4 dummy cycles (default) on SIO1 & SIO0→ data out interleave on SIO1 & SIO0→ to end 2READ operation, drive CS# high at any time during data out.

While Program/Erase/Write Status Register cycle is in progress, 2READ instruction is rejected without any impact on the Program/Erase/Write Status Register current cycle.

Figure 31. 2 x I/O Read Mode Sequence (SPI Mode only)

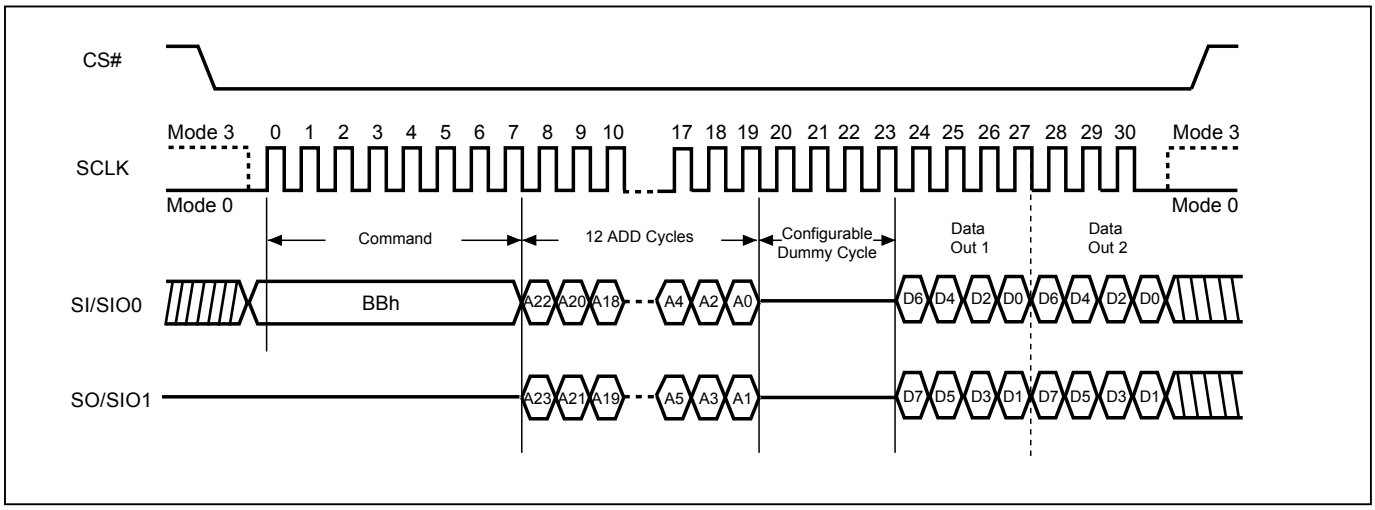

Note: Configuration Dummy cycle numbers will be different depending on the bit6 & bit 7 (DC0 & DC1) setting in configuration register.

9-15. Quad Read Mode (QREAD)

The QREAD instruction enables quad throughput of the Serial NOR Flash in read mode. A Quad Enable (QE) bit of status Register must be set to "1" before sending the QREAD instruction. The address is latched on rising edge of SCLK, and data of every four bits (interleave on 4 I/O pins) shift out on the falling edge of SCLK at a maximum frequency fQ. The first address byte can be at any location. The address is automatically increased to the next higher address after each byte data is shifted out, so the whole memory can be read out at a single QREAD instruction. The address counter rolls over to 0 when the highest address has been reached. Once writing QREAD instruction, the following data out will perform as 4-bit instead of previous 1-bit.

The sequence of issuing QREAD instruction is: CS# goes low→ send QREAD instruction → 3-byte address on SI → 8 dummy cycle (Default) → data out interleave on SIO3, SIO2, SIO1 & SIO0→ to end QREAD operation, drive CS# high at any time during data out.

While Program/Erase/Write Status Register cycle is in progress, QREAD instruction is rejected without any impact on the Program/Erase/Write Status Register current cycle.

Figure 32. Quad Read Mode Sequence (SPI Mode only)

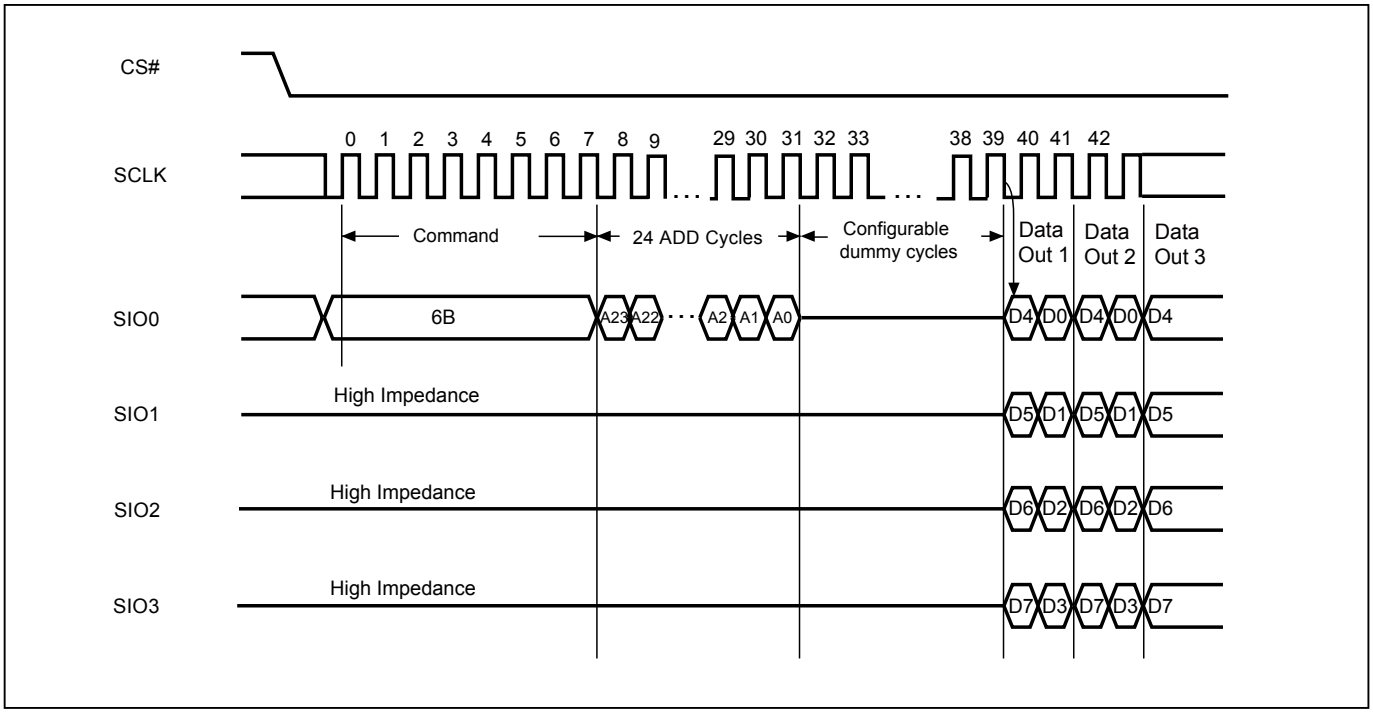

Note: Configuration Dummy cycle numbers will be different depending on the bit6 & bit 7 (DC0 & DC1) setting in configuration register.

9-16. 4 x I/O Read Mode (4READ)

The 4READ instruction enables quad throughput of the Serial NOR Flash in read mode. A Quad Enable (QE) bit of status Register must be set to "1" before sending the 4READ instruction. The address is latched on rising edge of SCLK, and data of every four bits (interleave on 4 I/O pins) shift out on the falling edge of SCLK at a maximum frequency fQ. The first address byte can be at any location. The address is automatically increased to the next higher address after each byte data is shifted out, so the whole memory can be read out at a single 4READ instruction. The address counter rolls over to 0 when the highest address has been reached. Once writing 4READ instruction, the following address/dummy/data out will perform as 4-bit instead of previous 1-bit.

Both SPI (8 clocks) and QPI (2 clocks) command cycles can be accepted by this instruction. The SIO[3:1] are don't care in SPI mode.

4 x I/O Read on SPI Mode (4READ) The sequence of issuing 4READ instruction is: CS# goes low→ send 4READ instruction→ 3-byte address interleave on SIO3, SIO2, SIO1 & SIO0→ 6 dummy cycles (Default) →data out interleave on SIO3, SIO2, SIO1 & SIO0→ to end 4READ operation, drive CS# high at any time during data out.

4 x I/O Read on QPI Mode (4READ) The 4READ instruction also support on QPI command mode. The sequence of issuing 4READ instruction QPI mode is: CS# goes low→ send 4READ instruction→ 3-byte address interleave on SIO3, SIO2, SIO1 & SIO0→ 6 dummy cycles (Default) →data out interleave on SIO3, SIO2, SIO1 & SIO0→ to end 4READ operation, drive CS# high at any time during data out.

While Program/Erase/Write Status Register cycle is in progress, 4READ instruction is rejected without any impact on the Program/Erase/Write Status Register current cycle.

W4READ instruction (E7h) is also available for 4 I/O read. Please refer to *"Figure 33. W4READ (Quad Read with 4 dummy cycles) Sequence"*.

Figure 33. W4READ (Quad Read with 4 dummy cycles) Sequence

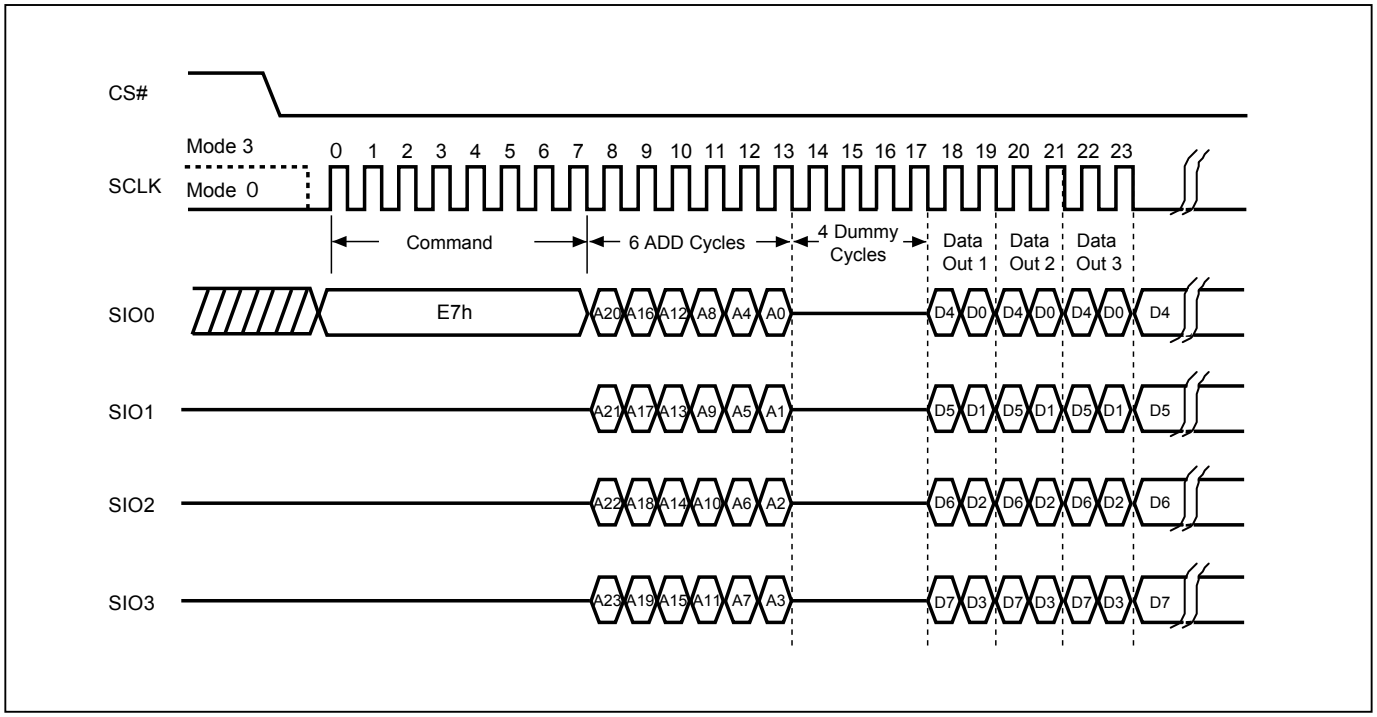

Figure 34. 4 x I/O Read Mode Sequence (SPI Mode)

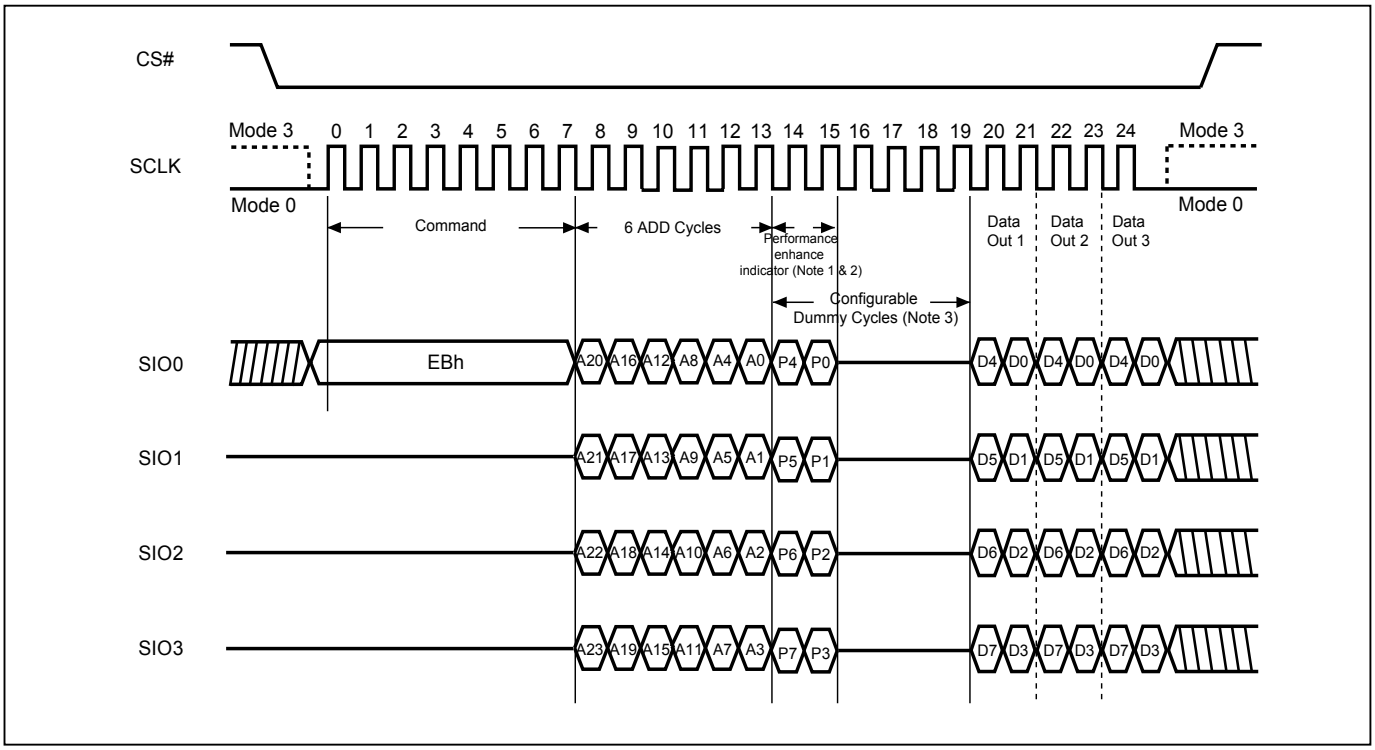

Notes:
1. Hi-impedance is inhibited for the two clock cycles.
2. P7≠P3, P6≠P2, P5≠P1 & P4≠P0 (Toggling) will result in entering the performance enhance mode.
3. Configuration Dummy cycle numbers will be different depending on the bit6 & bit 7 (DC0 & DC1) setting in configuration register.

Figure 35. 4 x I/O Read Mode Sequence (QPI Mode)

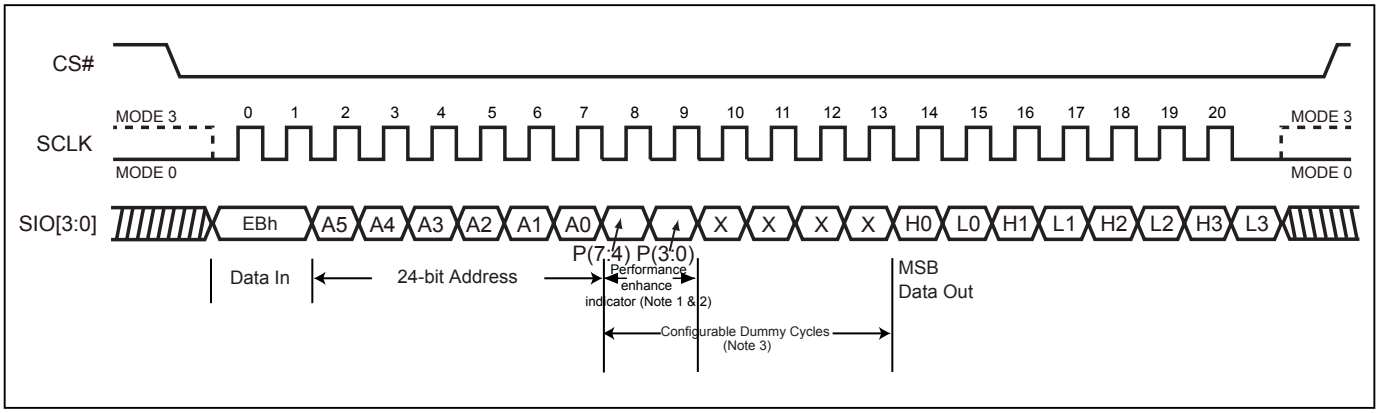

Notes:
1. Hi-impedance is inhibited for the two clock cycles.
2. P7≠P3, P6≠P2, P5≠P1 & P4≠P0 (Toggling) will result in entering the performance enhance mode.
3. Configuration Dummy cycle numbers will be different depending on the bit6 & bit 7 (DC0 & DC1) setting in configuration register.

9-17. Burst Read

The Burst Read feature allows applications to fill a cache line with a fixed length of data without using multiple read commands. Burst Read is disabled by default at power-up or reset. Burst Read is enabled by setting the Burst Length. When the Burst Length is set, reads will wrap on the selected boundary (8/16/32/64-bytes) containing the initial target address. For example if an 8-byte Wrap Depth is selected, reads will wrap on the 8-byte-page-aligned boundary containing the initial read address.

To set the Burst Length, drive CS# low → send SET BURST LENGTH instruction code (C0h) → send WRAP CODE →drive CS# high. Refer to the table below for valid 8-bit Wrap Codes and their corresponding Wrap Depth.

Data	Wrap Around	Wrap Depth
00h	Yes	8-byte
01h	Yes	16-byte
02h	Yes	32-byte
03h	Yes	64-byte
1xh	No	X

Once Burst Read is enabled, it will remain enabled until the device is power-cycled or reset. The SPI and QPI mode 4READ read commands support the wrap around feature after Burst Read is enabled. To change the wrap depth, resend the Burst Read instruction with the appropriate Wrap Code. To disable Burst Read, send the Burst Read instruction with Wrap Code 1xh. QPI “EBh” and SPI “EBh” “E7h” support wrap around feature after wrap around is enabled. Both SPI (8 clocks) and QPI (2 clocks) command cycles can be accepted by this instruction. The SIO[3:1] are don't care during SPI mode.

Figure 36. Burst Read (SPI Mode)

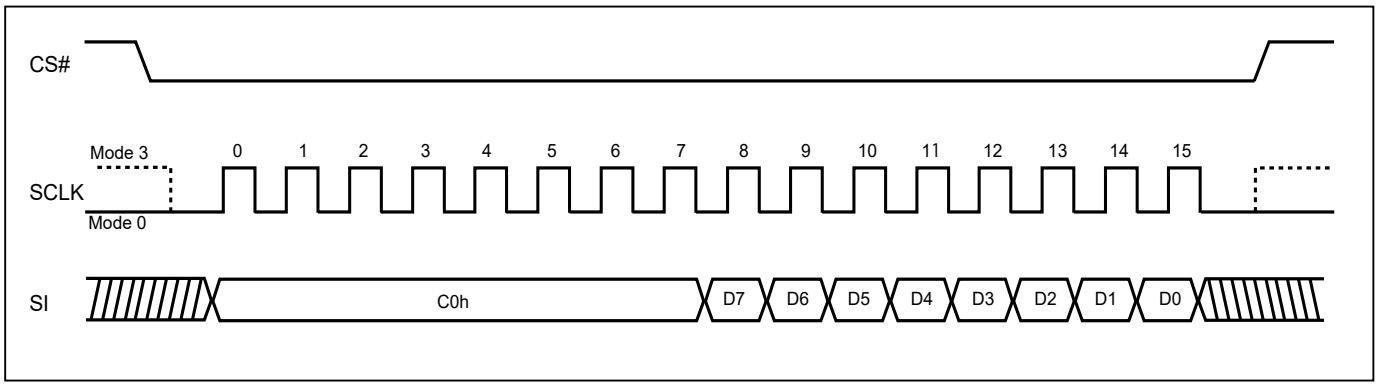

Figure 37. Burst Read (QPI Mode)

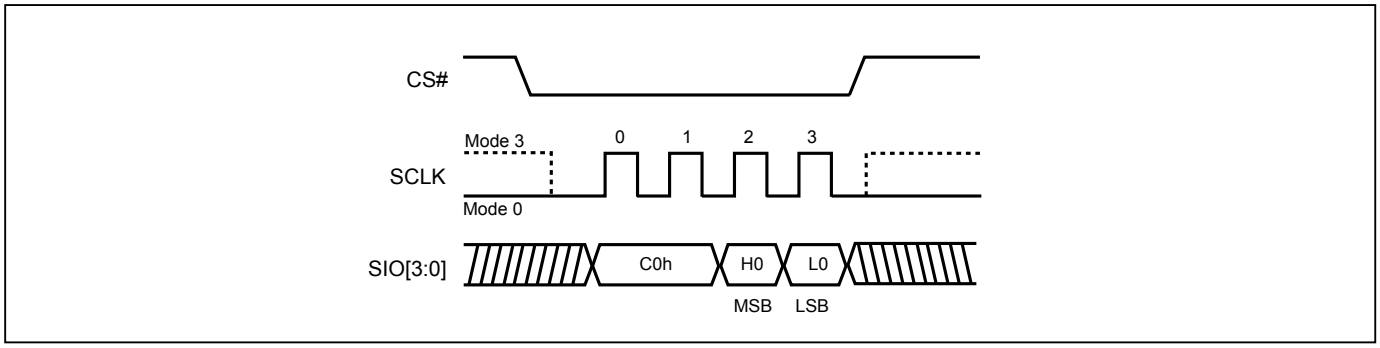

Note: MSB=Most Significant Bit
LSB=Least Significant Bit

9-18. Performance Enhance Mode - XIP (execute-in-place)

The device could waive the command cycle bits if the two cycle bits after address cycle toggles.

Performance enhance mode is supported in both SPI and QPI mode.

In QPI mode, “EBh” and SPI “EBh” commands support enhance mode. The performance enhance mode is not supported in dual I/O mode.

To enter performance-enhancing mode, P[7:4] must be toggling with P[3:0]; likewise P[7:0]=A5h, 5Ah, F0h or 0Fh can make this mode continue and skip the next 4READ instruction. To leave enhance mode, P[7:4] is no longer toggling with P[3:0]; likewise P[7:0]=FFh, 00h, AAh or 55h along with CS# is afterwards raised and then lowered. Issuing ”FFh” data cycle can also exit enhance mode. The system then will leave performance enhance mode and return to normal operation.

After entering enhance mode, following CS# go high, the device will stay in the read mode and treat CS# go low of the first clock as address instead of command cycle.

This sequence of issuing 4READ instruction is especially useful in random access: CS# goes low→send 4READ instruction→3-bytes address interleave on SIO3, SIO2, SIO1 & SIO0 →performance enhance toggling bit P[7:0]→ 4 dummy cycles (Default) →data out until CS# goes high → CS# goes low (The following 4READ instruction is not allowed, hence 8 cycles of 4READ can be saved comparing to normal 4READ mode) → 3-bytes random access address.

To conduct the Performance Enhance Mode Reset operation in SPI mode, FFh data cycle, 8 clocks, should be issued in 1I/O sequence. In QPI Mode, FFFFFFFFh data cycle, 8 clocks, in 4I/O should be issued.

If the system controller is being Reset during operation, the flash device will return to the standard SPI operation.

Figure 38. 4 x I/O Read performance enhance Mode Sequence (SPI Mode)

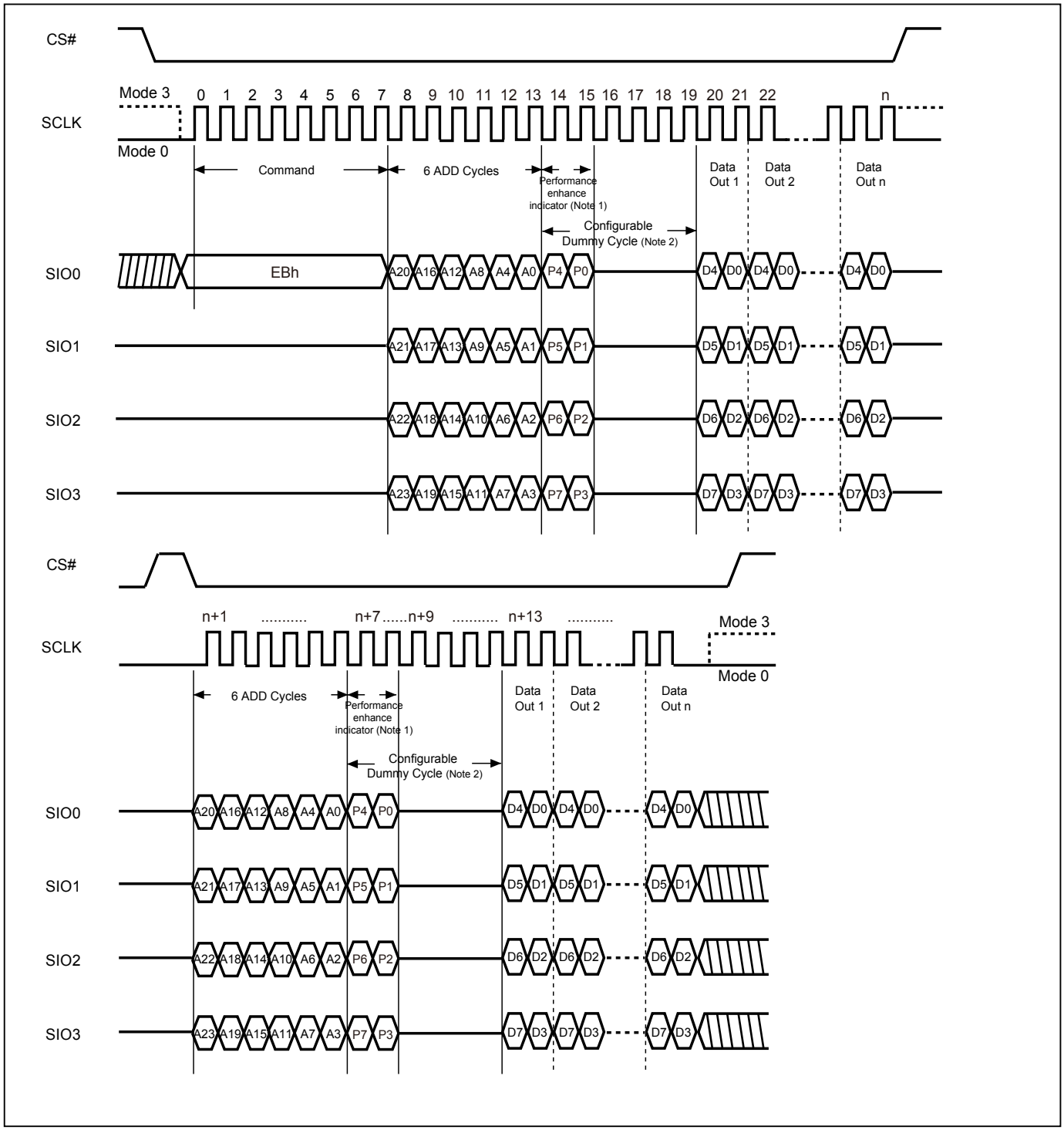

Notes:

1. If not using performance enhance recommend to keep 1 or 0 in performance enhance indicator. Reset the performance enhance mode, if P7=P3 or P6=P2 or P5=P1 or P4=P0, ex: AA, 00, FF.
2. Configuration Dummy cycle numbers will be different depending on the bit6 & bit 7 (DC0 & DC1) setting in configuration register.

Figure 39. 4 x I/O Read Performance Enhance Mode Sequence (QPI Mode)

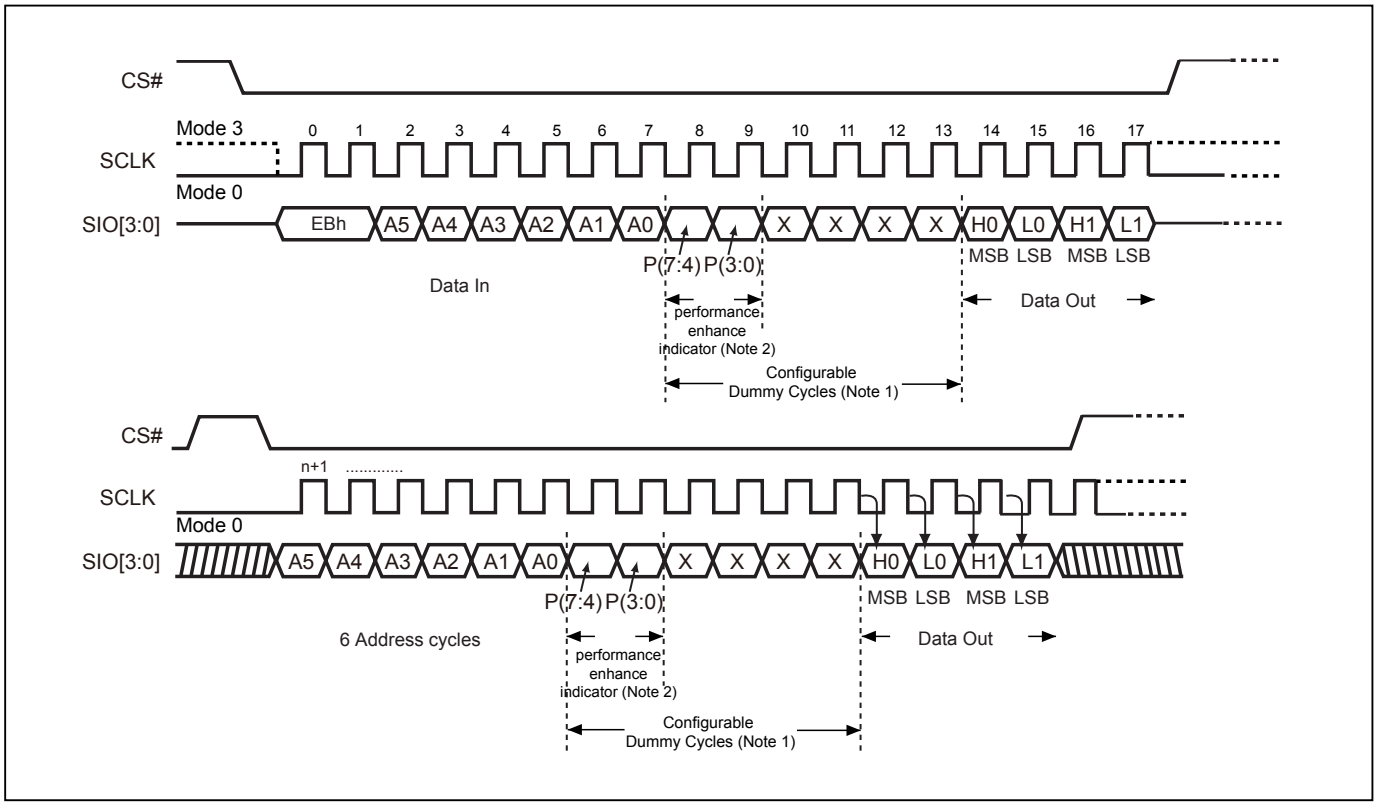

Notes:

1. Configuration Dummy cycle numbers will be different depending on the bit6 & bit 7 (DC0 & DC1) setting in configuration register.
2. If not using performance enhance recommend to keep 1 or 0 in performance enhance indicator. Reset the performance enhance mode, if P7=P3 or P6=P2 or P5=P1 or P4=P0, ex: AA, 00, FF.

9-19. Sector Erase (SE)

The Sector Erase (SE) instruction is for erasing the data of the chosen sector to be "1". The instruction is used for any 4K-byte sector. A Write Enable (WREN) instruction must be executed to set the Write Enable Latch (WEL) bit before sending the Sector Erase (SE). Any address of the sector (please refer to *"Table 4. Memory Organization"*) is a valid address for Sector Erase (SE) instruction. The CS# must go high exactly at the byte boundary (the least significant bit of the address byte been latched-in); otherwise, the instruction will be rejected and not executed.

Address bits [Am-A12] (Am is the most significant address) select the sector address.

The sequence of issuing SE instruction is: CS# goes low→ send SE instruction code→ 3-byte address on SI→ CS# goes high.

Both SPI (8 clocks) and QPI (2 clocks) command cycles can be accepted by this instruction. The SIO[3:1] are don't care during SPI mode.

The self-timed Sector Erase Cycle time (tSE) is initiated as soon as Chip Select (CS#) goes high. The Write in Progress (WIP) bit still can be checked while the Sector Erase cycle is in progress. The WIP sets 1 during the tSE timing, and clears when Sector Erase Cycle is completed, and the Write Enable Latch (WEL) bit is cleared. If the Block is protected by BP bits (Block Lock (BP) protection mode), the Sector Erase (SE) instruction will not be executed on the block.

Figure 40. Sector Erase (SE) Sequence (SPI Mode)

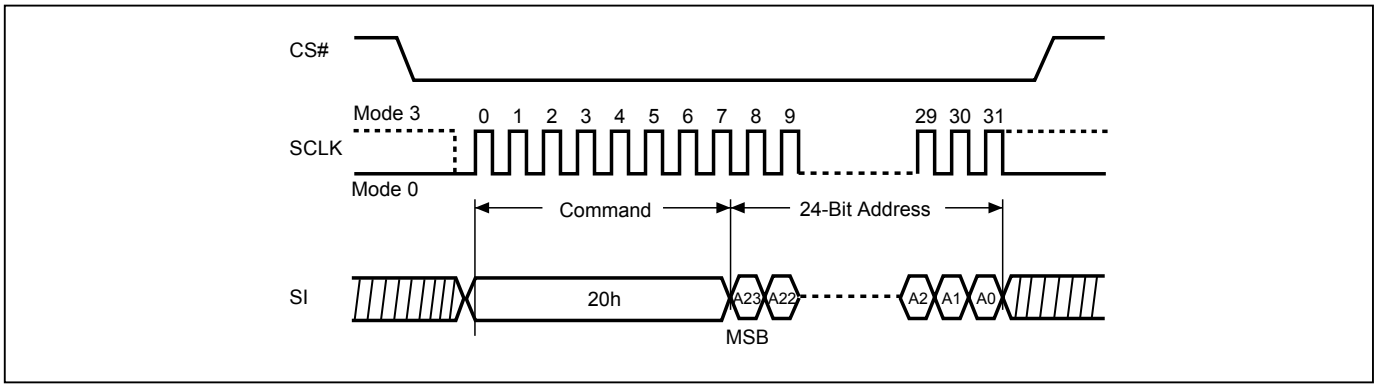

Figure 41. Sector Erase (SE) Sequence (QPI Mode)

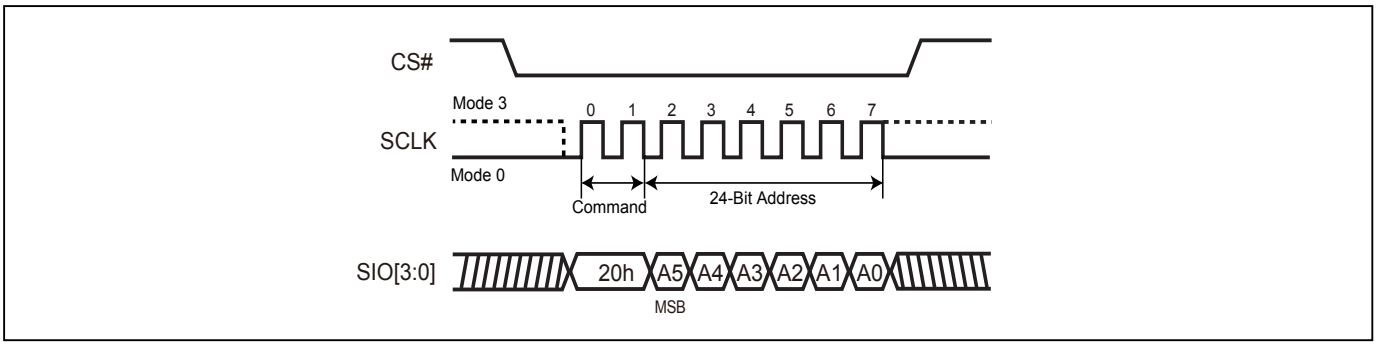

9-20. Block Erase (BE32K)

The Block Erase (BE32K) instruction is for erasing the data of the chosen block to be "1". The instruction is used for 32K-byte block erase operation. A Write Enable (WREN) instruction must be executed to set the Write Enable Latch (WEL) bit before sending the Block Erase (BE32K). Any address of the block (Please refer to *"Table 4. Memory Organization"*) is a valid address for Block Erase (BE32K) instruction. The CS# must go high exactly at the byte boundary (the least significant bit of address byte been latched-in); otherwise, the instruction will be rejected and not executed.

The sequence of issuing BE32K instruction is: CS# goes low→ send BE32K instruction code→ 3-byte address on SI→CS# goes high.

Both SPI (8 clocks) and QPI (2 clocks) command cycles can be accepted by this instruction. The SIO[3:1] are don't care during SPI mode.

The self-timed Block Erase Cycle time (tBE32K) is initiated as soon as Chip Select (CS#) goes high. The Write in Progress (WIP) bit still can be checked while during the Block Erase cycle is in progress. The WIP sets during the tBE32K timing, and clears when Block Erase Cycle is completed, and the Write Enable Latch (WEL) bit is cleared. If the Block is protected by BP bits (Block Lock (BP) protection mode), the Block Erase (BE32K) instruction will not be executed on the block.

Figure 42. Block Erase 32KB (BE32K) Sequence (SPI Mode)

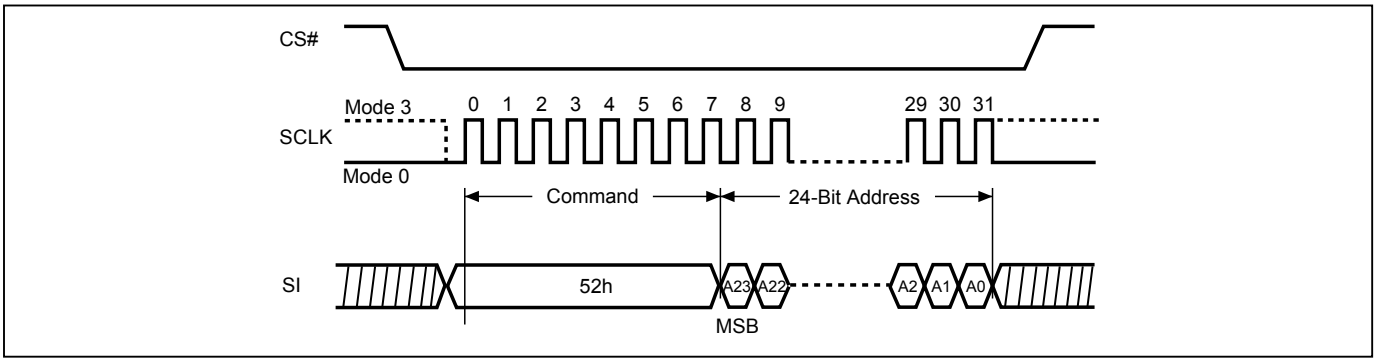

Figure 43. Block Erase 32KB (BE32K) Sequence (QPI Mode)

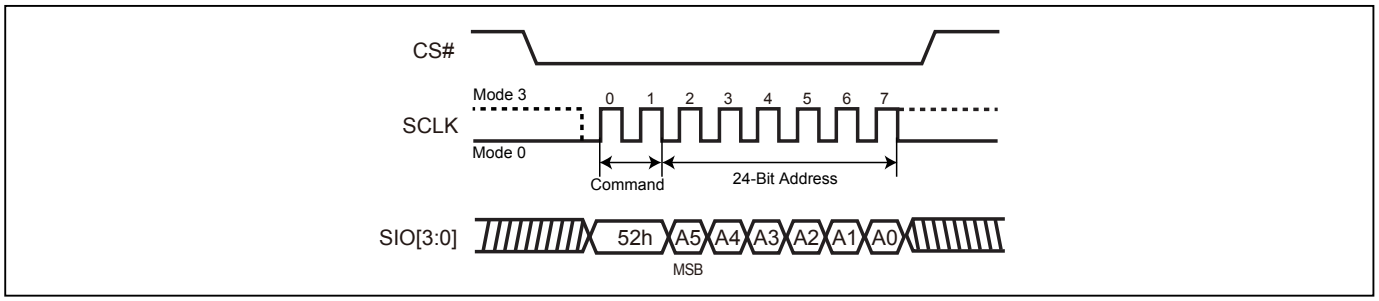

9-21. Block Erase (BE)

The Block Erase (BE) instruction is for erasing the data of the chosen block to be "1". The instruction is used for 64K-byte block erase operation. A Write Enable (WREN) instruction must be executed to set the Write Enable Latch (WEL) bit before sending the Block Erase (BE). Any address of the block (Please refer to *"Table 4. Memory Organization"*) is a valid address for Block Erase (BE) instruction. The CS# must go high exactly at the byte boundary (the least significant bit of address byte been latched-in); otherwise, the instruction will be rejected and not executed.

The sequence of issuing BE instruction is: CS# goes low→ send BE instruction code→ 3-byte address on SI→ CS# goes high.

Both SPI (8 clocks) and QPI (2 clocks) command cycles can be accepted by this instruction. The SIO[3:1] are don't care during SPI mode.

The self-timed Block Erase Cycle time (tBE) is initiated as soon as Chip Select (CS#) goes high. The Write in Progress (WIP) bit still can be checked while the Block Erase cycle is in progress. The WIP sets during the tBE timing, and clears when Block Erase Cycle is completed, and the Write Enable Latch (WEL) bit is reset. If the Block is protected by BP bits (Block Lock (BP) protection mode), the Block Erase (BE) instruction will not be executed on the block.

Figure 44. Block Erase (BE) Sequence (SPI Mode)

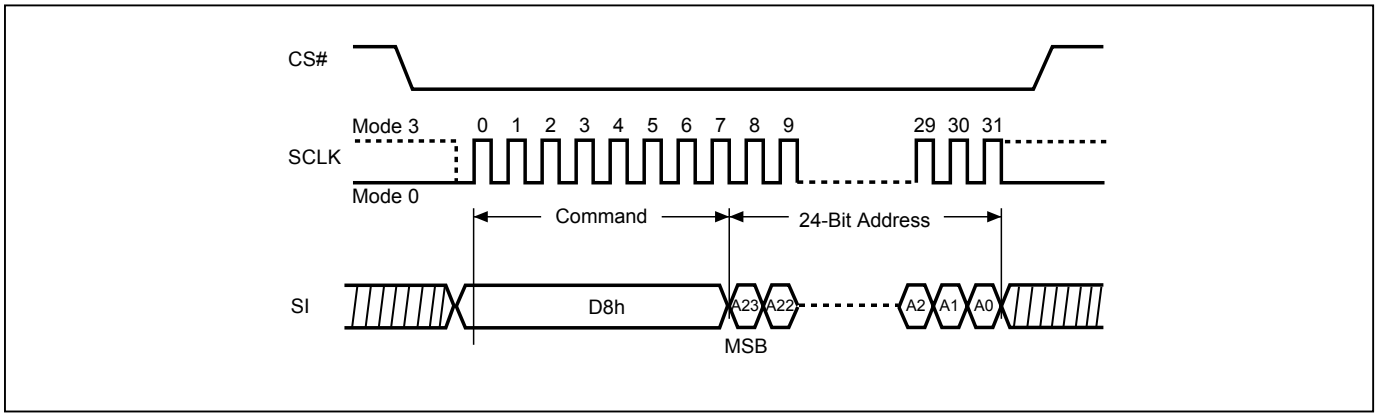

Figure 45. Block Erase (BE) Sequence (QPI Mode)

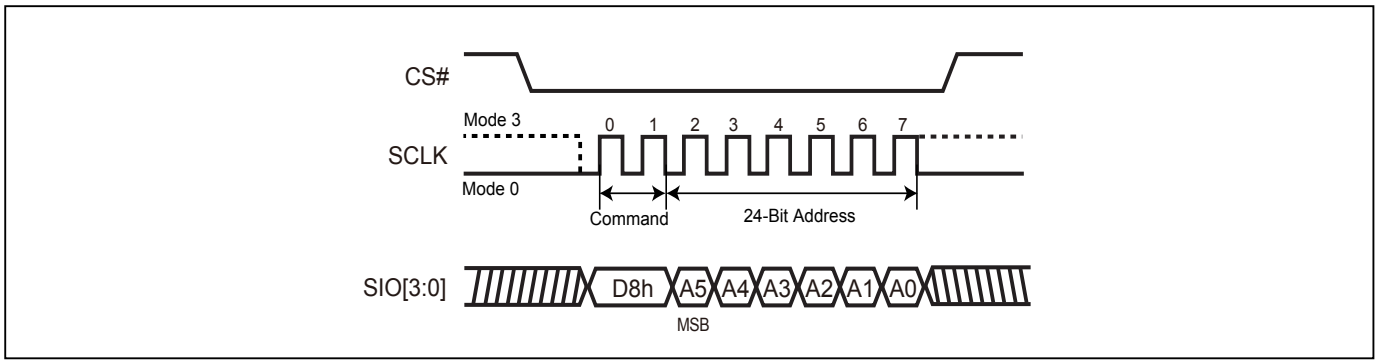

9-22. Chip Erase (CE)

The Chip Erase (CE) instruction is for erasing the data of the whole chip to be "1". A Write Enable (WREN) instruction must be executed to set the Write Enable Latch (WEL) bit before sending the Chip Erase (CE). The CS# must go high exactly at the byte boundary, otherwise the instruction will be rejected and not executed.

The sequence of issuing CE instruction is: CS# goes low→send CE instruction code→CS# goes high.

Both SPI (8 clocks) and QPI (2 clocks) command cycles can be accepted by this instruction. The SIO[3:1] are don't care during SPI mode.

The self-timed Chip Erase Cycle time (tCE) is initiated as soon as Chip Select (CS#) goes high. The Write in Progress (WIP) bit still can be checked while the Chip Erase cycle is in progress. The WIP sets during the tCE timing, and clears when Chip Erase Cycle is completed, and the Write Enable Latch (WEL) bit is cleared.

When the chip is under "Block Lock (BP) protection mode" (WPSEL=0): The Chip Erase(CE) instruction will not be executed, if one (or more) sector is protected by BP3-BP0 bits. It will be only executed when BP3-BP0 all set to "0".

Figure 46. Chip Erase (CE) Sequence (SPI Mode)

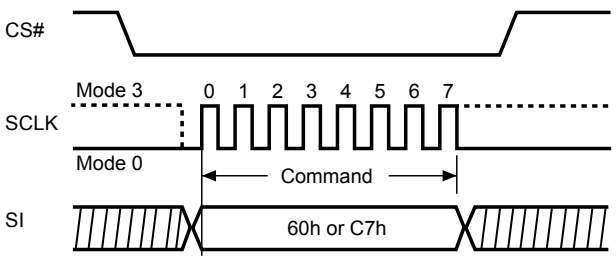

Figure 47. Chip Erase (CE) Sequence (QPI Mode)

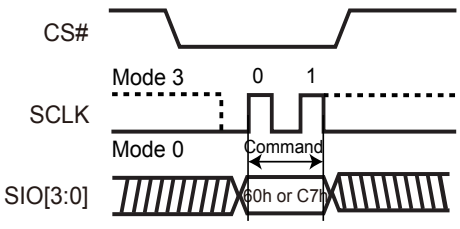

9-23. Page Program (PP)

The Page Program (PP) instruction is for programming memory bits to "0". One to 256 bytes can be sent to the device to be programmed. A Write Enable (WREN) instruction must be executed to set the Write Enable Latch (WEL) bit before sending the Page Program (PP). If more than 256 data bytes are sent to the device, only the last 256 data bytes will be accepted and the previous data bytes will be disregarded. The Page Program instruction requires that all the data bytes fall within the same 256-byte page. The low order address byte A[7:0] specifies the starting address within the selected page. Bytes that will cross a page boundary will wrap to the beginning of the selected page. The device can accept (256 minus A[7:0]) data bytes without wrapping. If 256 data bytes are going to be programmed, A[7:0] should be set to 0.

The sequence of issuing PP instruction is: CS# goes low→ send PP instruction code→ 3-byte address on SI→ at least 1-byte on data on SI→ CS# goes high.

The CS# must be kept to low during the whole Page Program cycle; The CS# must go high exactly at the byte boundary (the latest eighth bit of data being latched in), otherwise the instruction will be rejected and will not be executed.

The self-timed Page Program Cycle time (tPP) is initiated as soon as Chip Select (CS#) goes high. The Write in Progress (WIP) bit still can be checked while the Page Program cycle is in progress. The WIP sets during the tPP timing, and clears when Page Program Cycle is completed, and the Write Enable Latch (WEL) bit is cleared. If the Block is protected by BP bits (WPSEL=0; Block Lock (BP) protection mode) the Page Program (PP) instruction will not be executed.

Both SPI (8 clocks) and QPI (2 clocks) command cycles can be accepted by this instruction. The SIO[3:1] are don't care during SPI mode.

Figure 48. Page Program (PP) Sequence (SPI Mode)

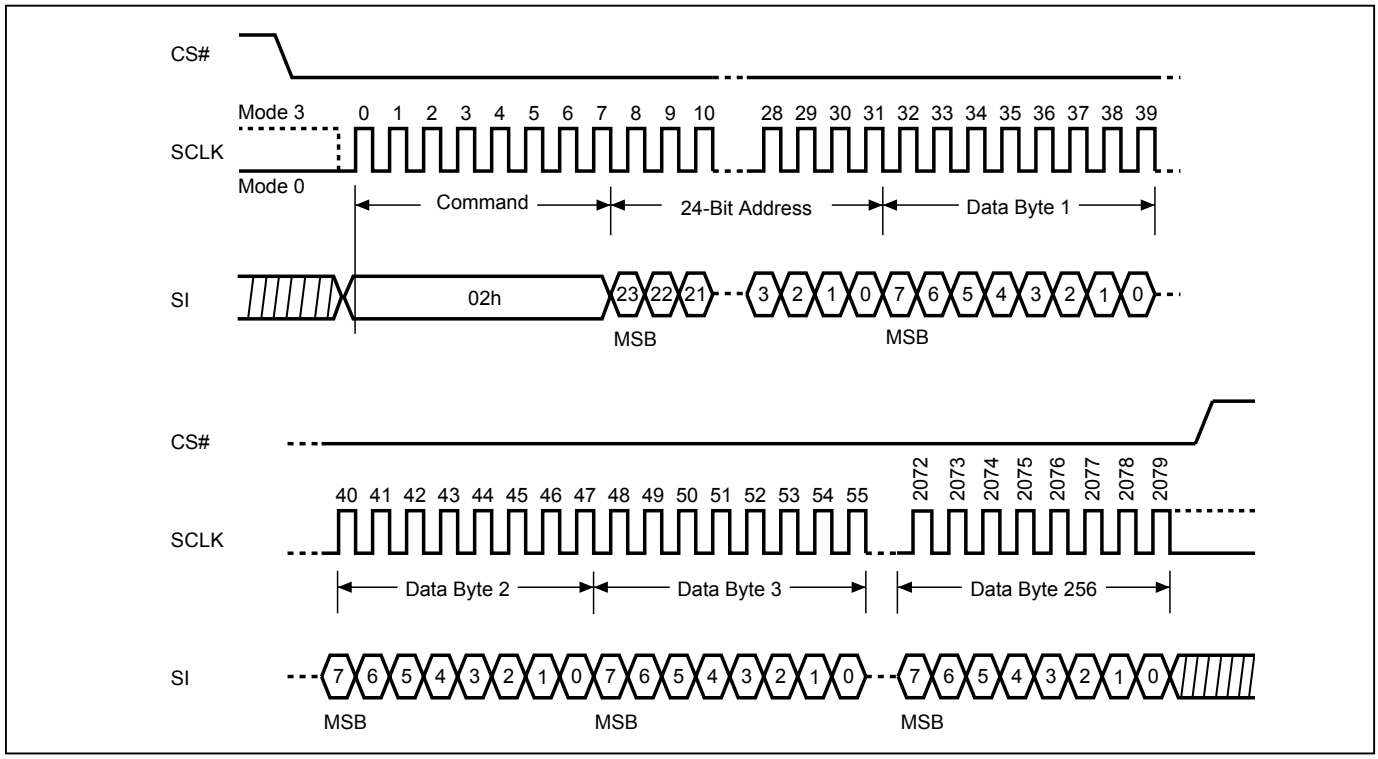

Figure 49. Page Program (PP) Sequence (QPI Mode)

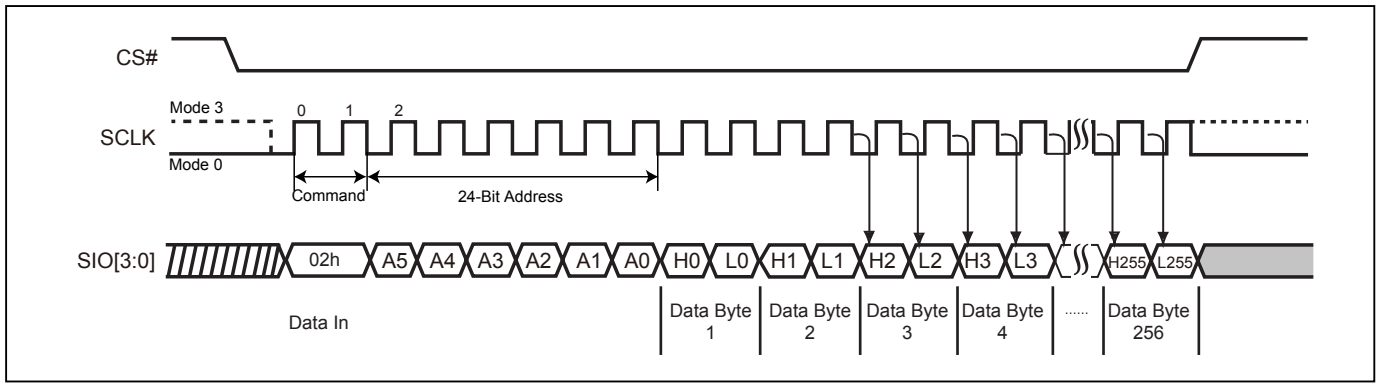

9-24. 4 x I/O Page Program (4PP)

The Quad Page Program (4PP) instruction is for programming the memory to be "0". A Write Enable (WREN) instruction must be executed to set the Write Enable Latch (WEL) bit and Quad Enable (QE) bit must be set to "1" before sending the Quad Page Program (4PP). The Quad Page Programming takes four pins: SIO0, SIO1, SIO2, and SIO3 as address and data input, which can improve programmer performance and the effectiveness of application. The other function descriptions are as same as standard page program.

The sequence of issuing 4PP instruction is: CS# goes low→ send 4PP instruction code→ 3-byte address on SIO[3:0]→ at least 1-byte on data on SIO[3:0]→CS# goes high.

If the page is protected by BP bits (WPSEL=0; Block Lock (BP) protection mode), the Quad Page Program (4PP) instruction will not be executed.

Figure 50. 4 x I/O Page Program (4PP) Sequence (SPI Mode only)

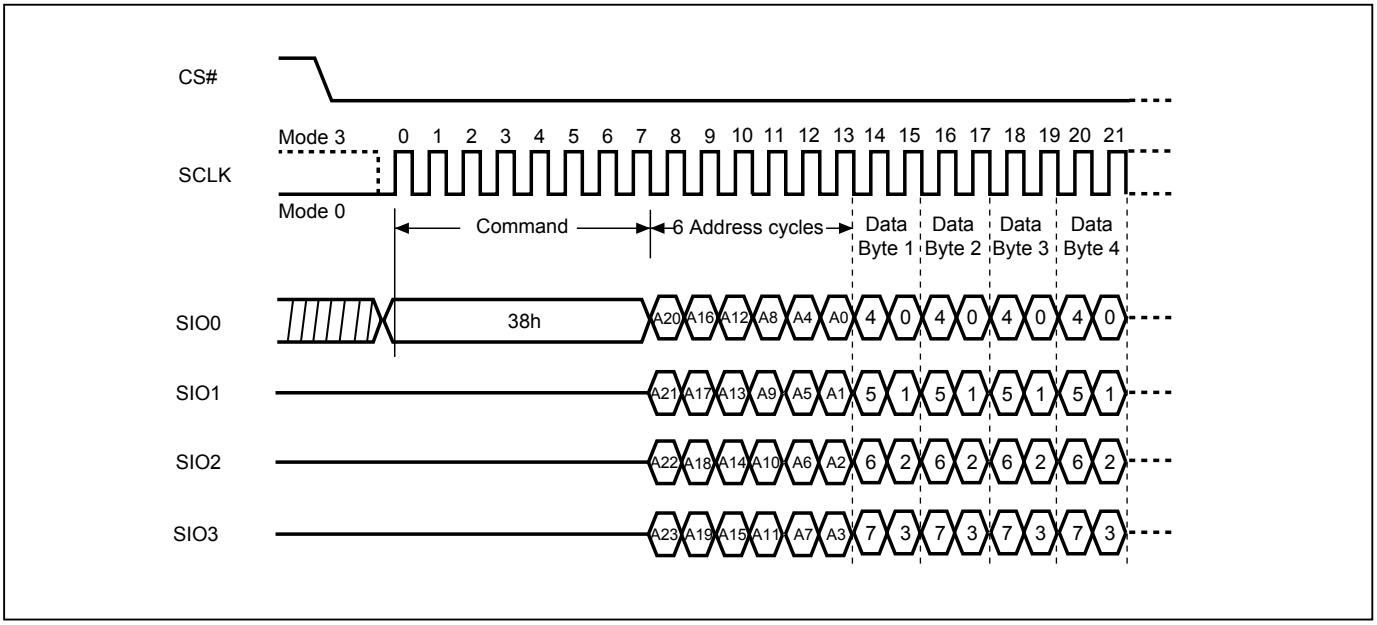

9-25. Factory Mode Erase/Program Operations

9-25-1. Factory Mode Sector Erase / 32KB Block Erase / 64KB Block Erase/ Chip Erase

To apply Factory Mode Sector Erase / 32KB Block Erase / 64KB Block Erase / Chip Erase, customers need to follow the operation below:

Factory Mode Enable (FMEN): The Factory Mode Enable (FMEN) instruction is for enhancing Sector Erase / 32KB Block Erase / 64KB Block Erase / Chip Erase performance, which increase factory production throughput. The FMEN instruction will need to be combined with the SE / BE32K / BE / CE instruction when user intends to change the device content.

A valid factory mode operation need to include three sequences: WREN instruction → FMEN instruction→ SE / BE32K / BE / CE instruction. The sequence of issuing FMEN instruction is: CS# goes low→send FMEN instruction code→ CS# goes high. Please note that Suspend command is not acceptable during factory mode.

The FMEN will be reset in following situations: Power-up, Reset# pin driven low, SE / BE32K / BE / CE command completion, and Softreset command completion.

Figure 51. Factory Mode Erase Flow

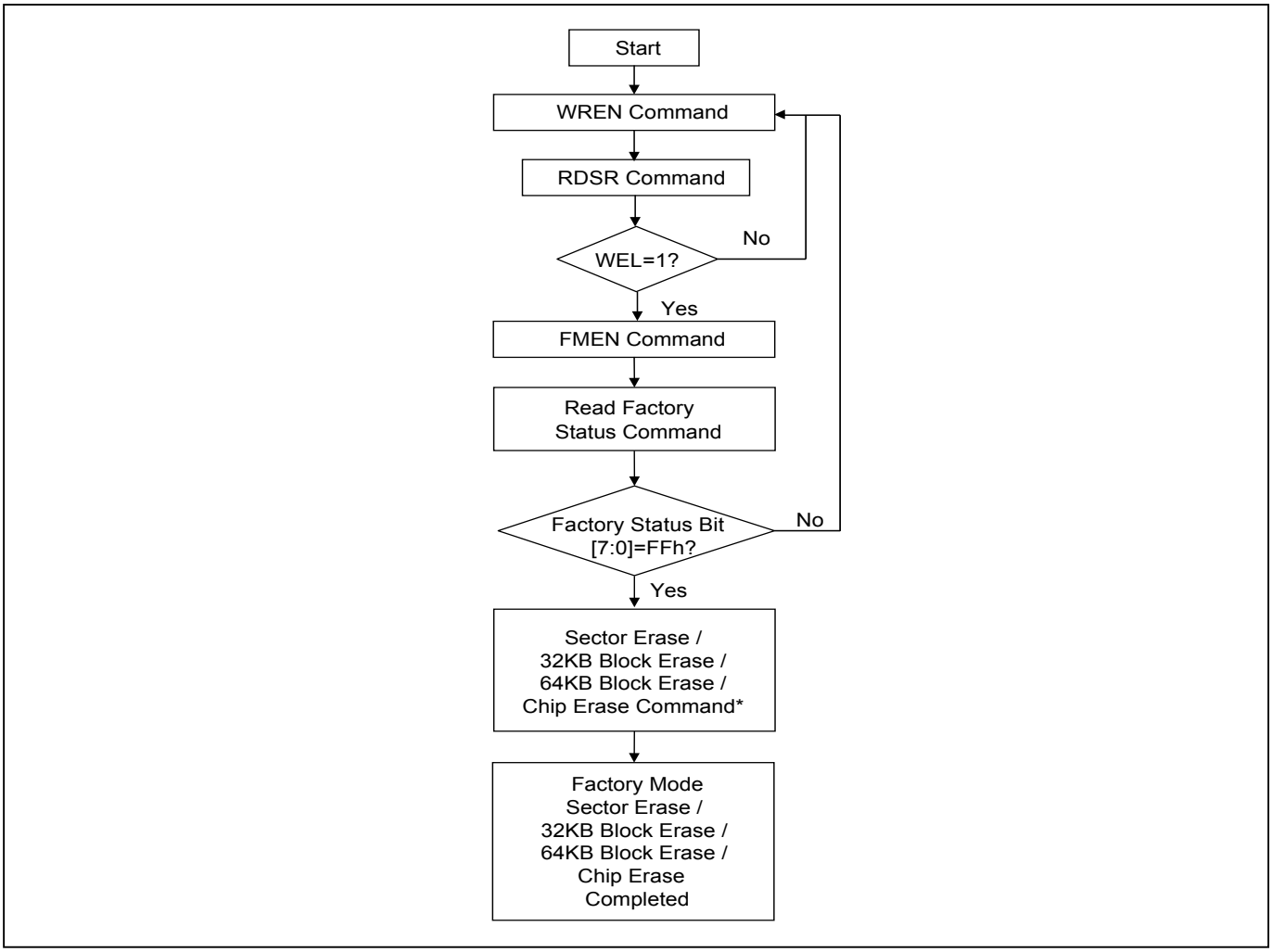

Note: * Please refer to *"Figure 21. Program/Erase flow with read array data"* and *"Figure 22. Program/Erase flow without read array data (read P_FAIL/E_FAIL flag)"*.

9-25-1. Factory Mode Page Program

To apply Factory Mode Page Program, customers need to follow the operation below:

Factory Mode Enable (FMEN): The Factory Mode Enable (FMEN) instruction is for enhancing Page Program performance, which increase factory production throughput. The FMEN instruction will need to be combined with the PP instruction when user intends to change the device content.

A valid factory mode operation need to include three sequences: WREN instruction → FMEN instruction→ PP instruction. The sequence of issuing FMEN instruction is: CS# goes low→send FMEN instruction code→ CS# goes high. Please note that Suspend command is not acceptable during factory mode.

The FMEN will be reset in following situations: Power-up, Reset# pin driven low, PP command completion, and Softreset command completion.

Figure 52. Factory Mode Page Program Flow

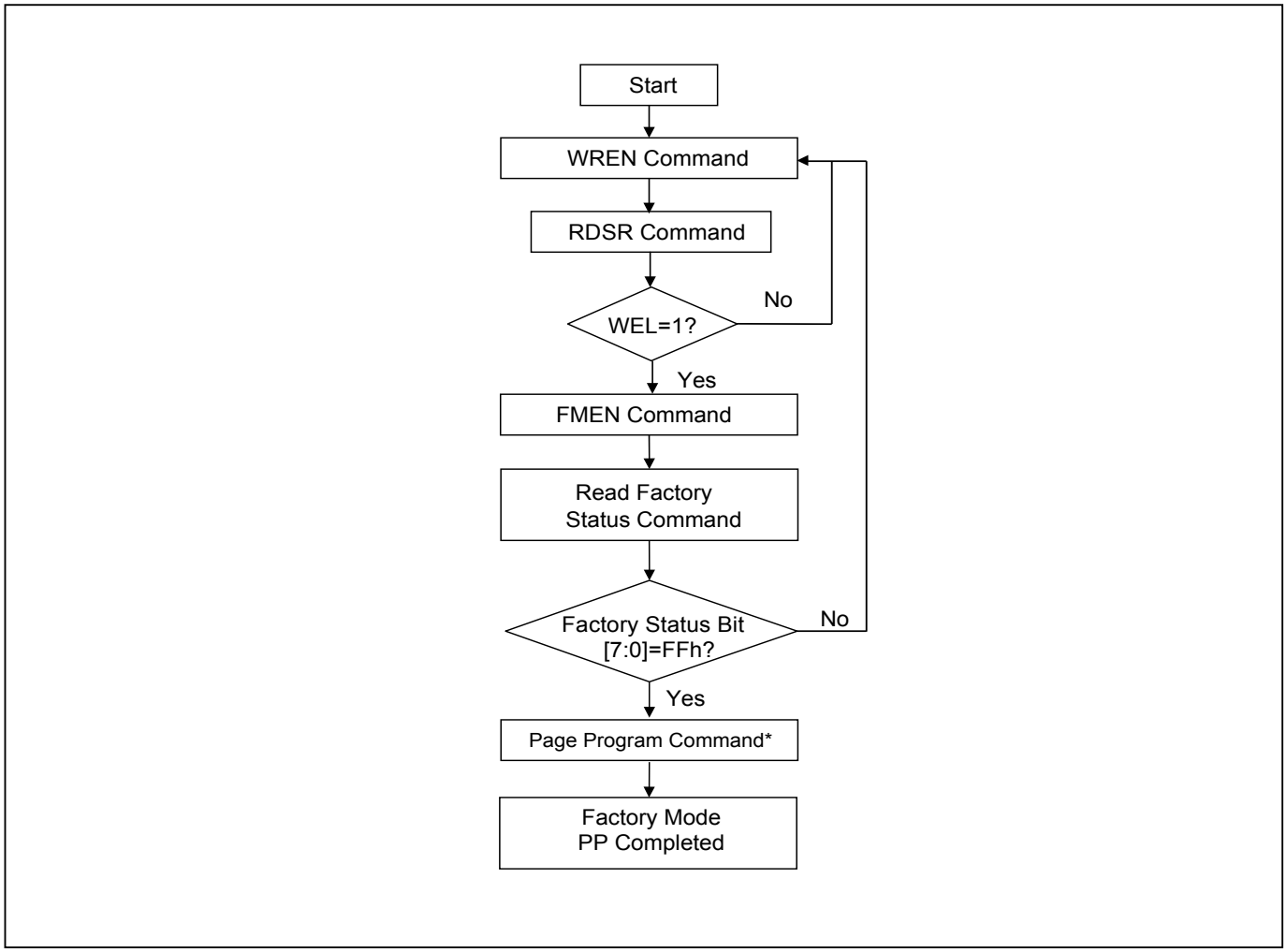

Note: * Please refer to *"Figure 21. Program/Erase flow with read array data"* and *"Figure 22. Program/Erase flow without read array data (read P_FAIL/E_FAIL flag)"*.

9-26. Read Factory Mode Status

- Read Factory Mode Status Register command is used to read chip status and check it is at factory mode or not.
- Like RDSR (Read Status Register, 05h), Factory Mode status will be outputted to the SO pin following this Read Factory Mode Status Register command (RDFMSR command, 44h). Please note that Read Factory Mode Status Register command is only available in read mode and it is not workable in program/erase process.
- Factory Mode status bit [7:0] shows Factory mode indicators. FMEN command can set them to 1, and the bits will automatically be reset after the end of erase or program operation.

Bit	Description	Bit Status	Default
7 to 0	FACTORY_MODE	00h = Not in Factory Mode FFh = In Factory Mode	00h

Figure 53. Read Factory Mode Status Register (SPI Mode)

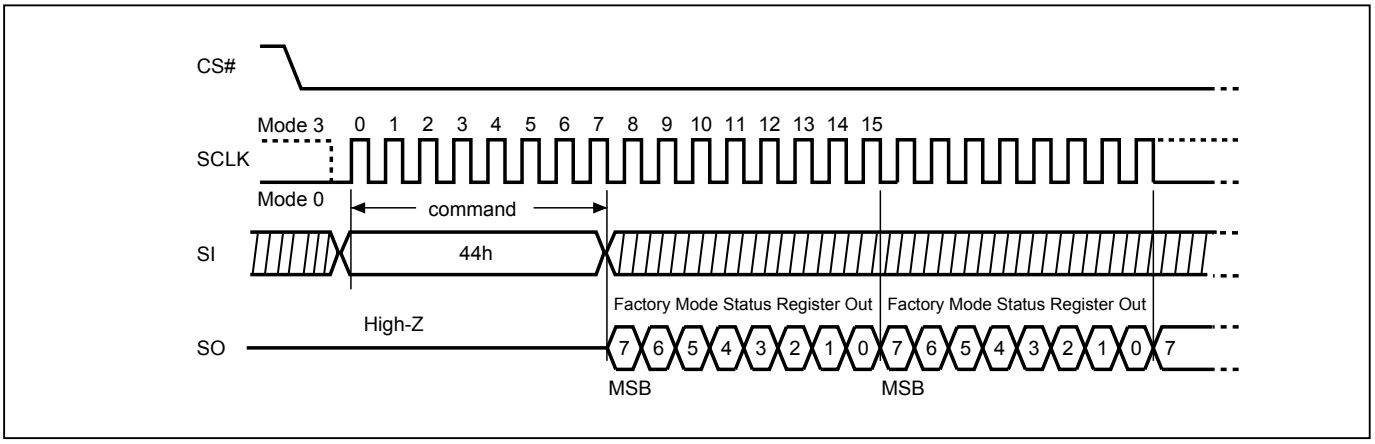

Figure 54. Read Status Register (RDSR) Sequence (QPI Mode)

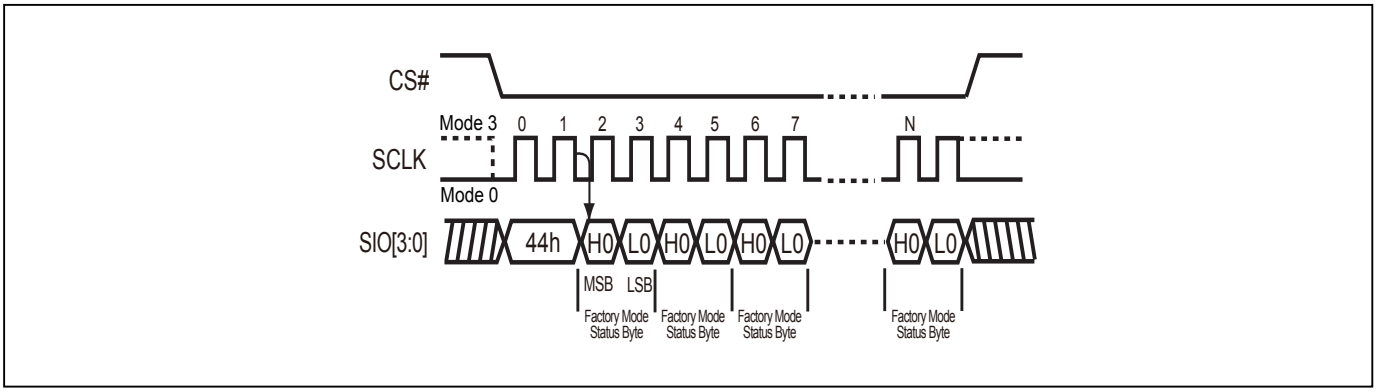

9-27. Deep Power-down (DP)

The Deep Power-down (DP) instruction places the device into a minimum power consumption state, Deep Power-down mode, in which the quiescent current is reduced from ISB1 to ISB2.

The sequence of issuing DP instruction: CS# goes low→ send DP instruction code→ CS# goes high. The CS# must go high at the byte boundary (after exactly eighth bits of the instruction code have been latched-in); otherwise the instruction will not be executed. Both SPI (8 clocks) and QPI (2 clocks) command cycles can be accepted by this instruction. SIO[3:1] are "don't care".

After CS# goes high there is a delay of tDP before the device transitions from Stand-by mode to Deep Power-down mode and before the current reduces from ISB1 to ISB2. Once in Deep Power-down mode, all instructions will be ignored except Release from Deep Power-down (RDP).

The device exits Deep Power-down mode and returns to Stand-by mode if it receives a Release from Deep Power-down (RDP) instruction, power-cycle, or reset. Please refer to *"Figure 57. Release from Deep Power-down (RDP) Sequence (Command ABh) (SPI Mode)"* and *"Figure 58. Release from Deep Power-down (RDP) Sequence (Command ABh) (QPI Mode)"*.

Figure 55. Deep Power-down (DP) Sequence (Command B9h) (SPI Mode)

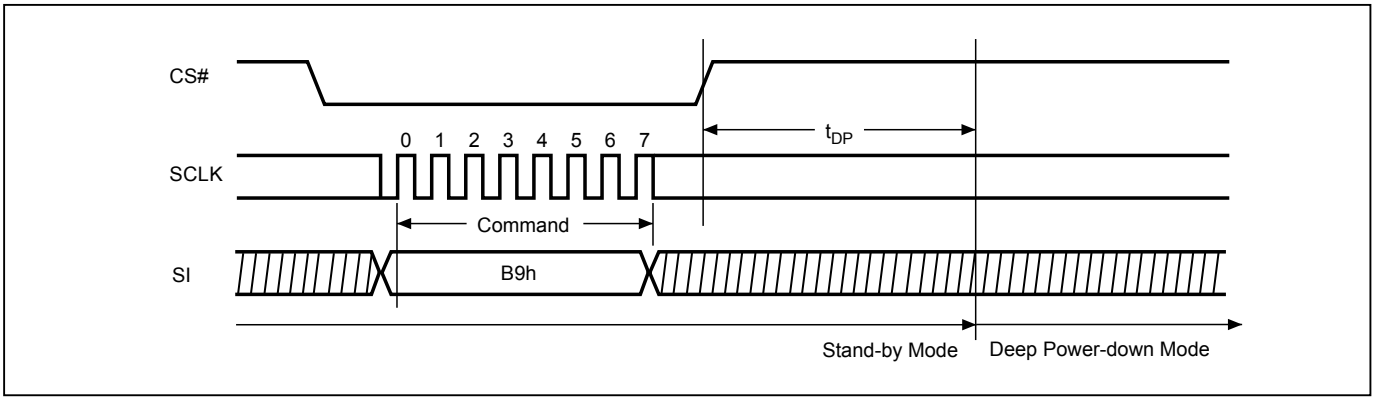

Figure 56. Deep Power-down (DP) Sequence (Command B9h) (QPI Mode)

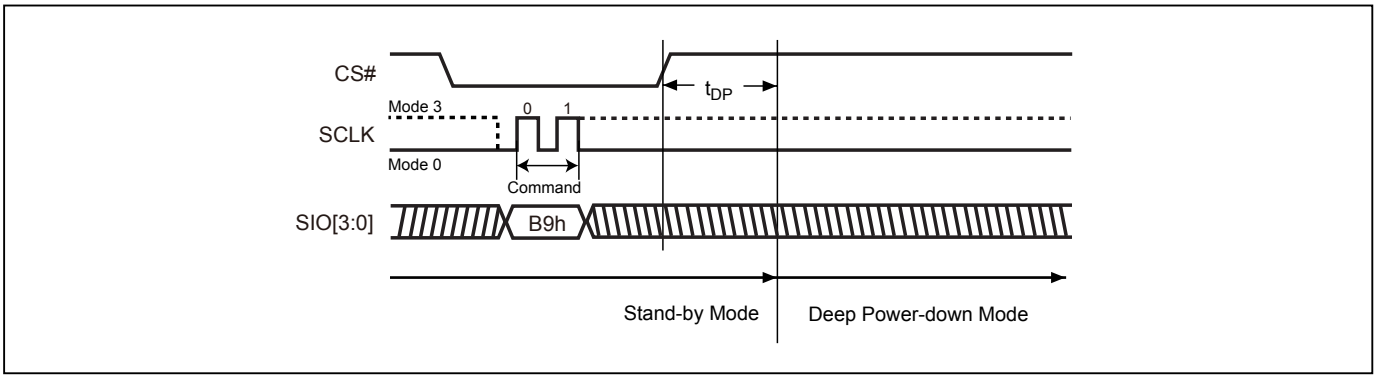

9-28. Release from Deep Power-down (RDP)

The RDP instruction is for releasing from Deep Power-down Mode. The Release from Deep Power-down (RDP) instruction is completed by driving Chip Select (CS#) High. When Chip Select (CS#) is driven High, the device is put in the standby Power mode. If the device was not previously in the Deep Power-down mode, the transition to the standby Power mode is immediate. If the device was previously in the Deep Power-down mode, though, the transition to the standby Power mode is delayed by tRES1, and Chip Select (CS#) must remain High for at least tRES1(max), as specified in *"Table 21. AC CHARACTERISTICS"*. Once in the standby mode, the device waits to be selected, so that it can receive, decode and execute instructions.

Both SPI (8 clocks) and QPI (2 clocks) command cycles can be accepted by this instruction. The SIO[3:1] are don't care during SPI mode.

Figure 57. Release from Deep Power-down (RDP) Sequence (Command ABh) (SPI Mode)

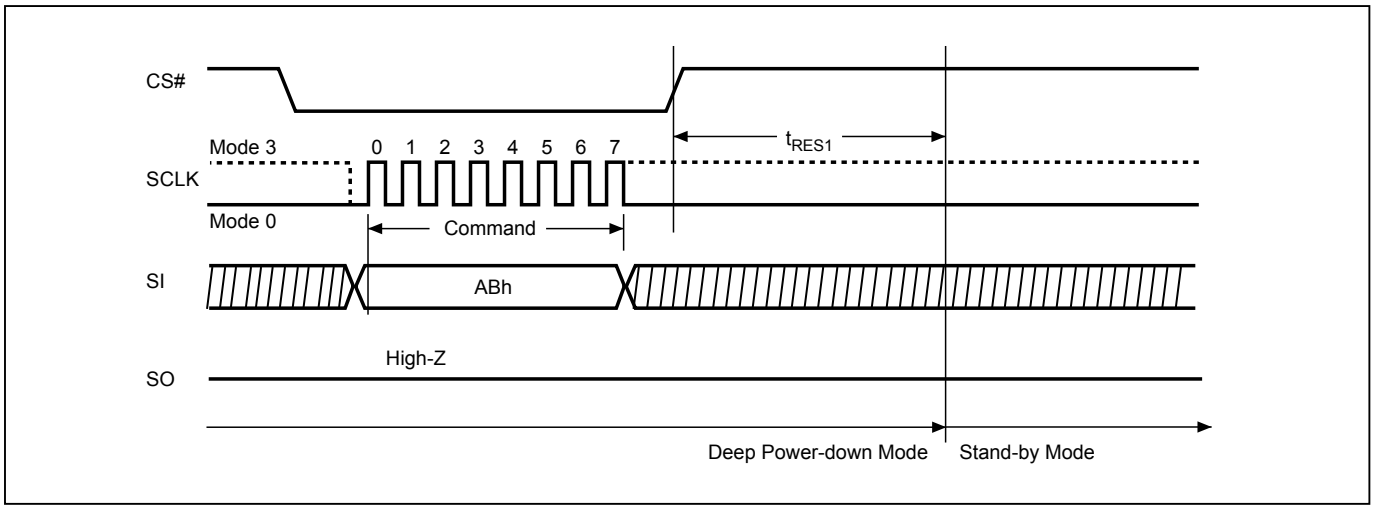

Figure 58. Release from Deep Power-down (RDP) Sequence (Command ABh) (QPI Mode)

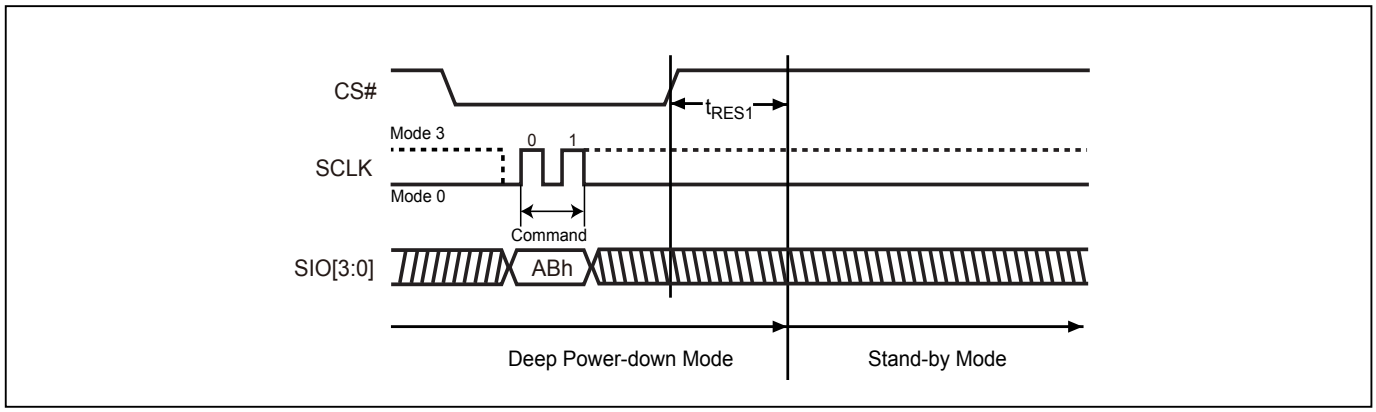

9-29. Enter Secured OTP (ENSO)

The ENSO instruction is for entering the additional 8K-bit secured OTP mode. The additional 8K-bit secured OTP is independent from main array, which may use to store unique serial number for system identifier. After entering the Secured OTP mode, and then follow standard read or program procedure to read out the data or update data. The Secured OTP data cannot be updated again once it is lock-down.

The sequence of issuing ENSO instruction is: CS# goes low→ send ENSO instruction to enter Secured OTP mode→ CS# goes high.

Both SPI (8 clocks) and QPI (2 clocks) command cycles can be accepted by this instruction. The SIO[3:1] are don't care during SPI mode.

Please note that after issuing ENSO command user can only access secure OTP region with standard read or program procedure. Furthermore, once security OTP is lock down, only read related commands are valid.

9-30. Exit Secured OTP (EXSO)

The EXSO instruction is for exiting the additional 8K-bit secured OTP mode.

The sequence of issuing EXSO instruction is: CS# goes low→ send EXSO instruction to exit Secured OTP mode→ CS# goes high.

Both SPI (8 clocks) and QPI (2 clocks) command cycles can be accepted by this instruction. The SIO[3:1] are don't care during SPI mode.

9-31. Read Security Register (RDSCUR)

The RDSCUR instruction is for reading the value of Security Register bits. The Read Security Register can be read at any time (even in program/erase/write status register/write security register condition) and continuously.

The sequence of issuing RDSCUR instruction is: CS# goes low→send RDSCUR instruction→Security Register data out on SO→ CS# goes high.

Both SPI (8 clocks) and QPI (2 clocks) command cycles can be accepted by this instruction. The SIO[3:1] are don't care during SPI mode.

Figure 59. Read Security Register (RDSCUR) Sequence (SPI Mode)

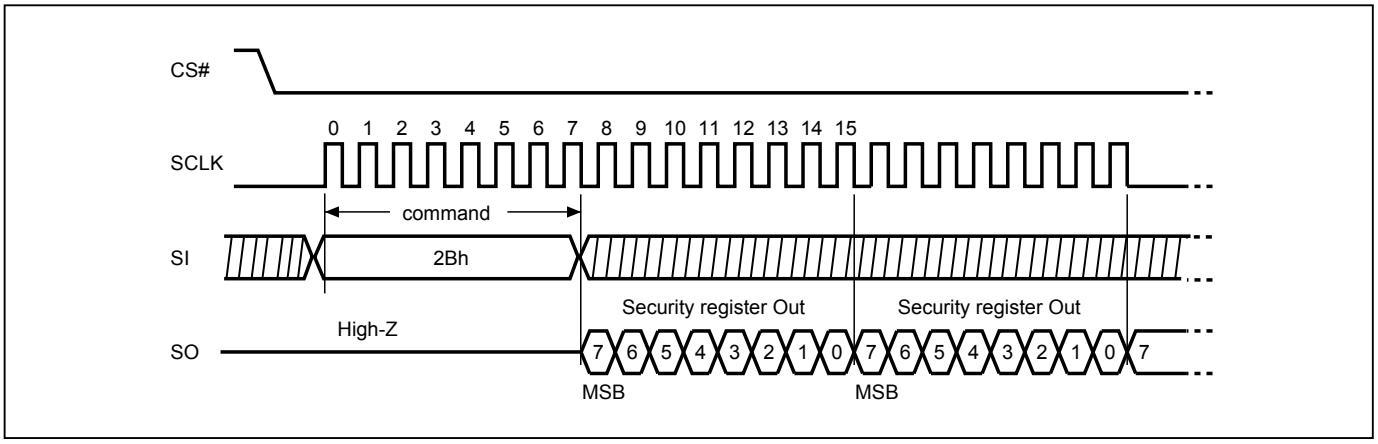

Figure 60. Read Security Register (RDSCUR) Sequence (QPI Mode)

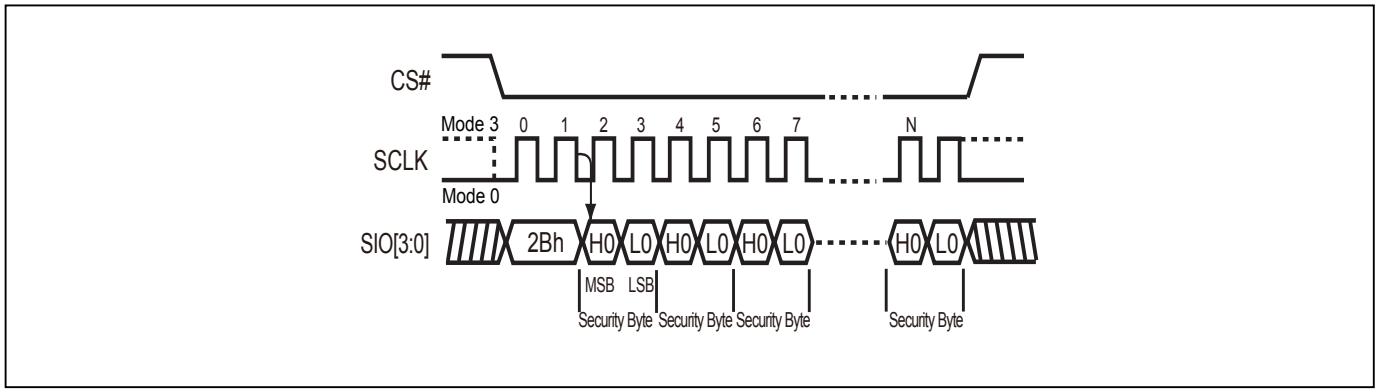

9-32. Write Security Register (WRSCUR)

The WRSCUR instruction is for changing the values of Security Register Bits. The WREN (Write Enable) instruction is required before issuing WRSCUR instruction. The WRSCUR instruction may change the values of bit1 (LDSO bit) for customer to lock-down the 1st 4K-bit Secured OTP area. Once the LDSO bit is set to "1", the Secured OTP area cannot be updated any more.

The sequence of issuing WRSCUR instruction is: CS# goes low→ send WRSCUR instruction → CS# goes high.

Both SPI (8 clocks) and QPI (2 clocks) command cycles can be accepted by this instruction. The SIO[3:1] are don't care during SPI mode.

The CS# must go high exactly at the boundary; otherwise, the instruction will be rejected and not executed.

Figure 61. Write Security Register (WRSCUR) Sequence (SPI Mode)

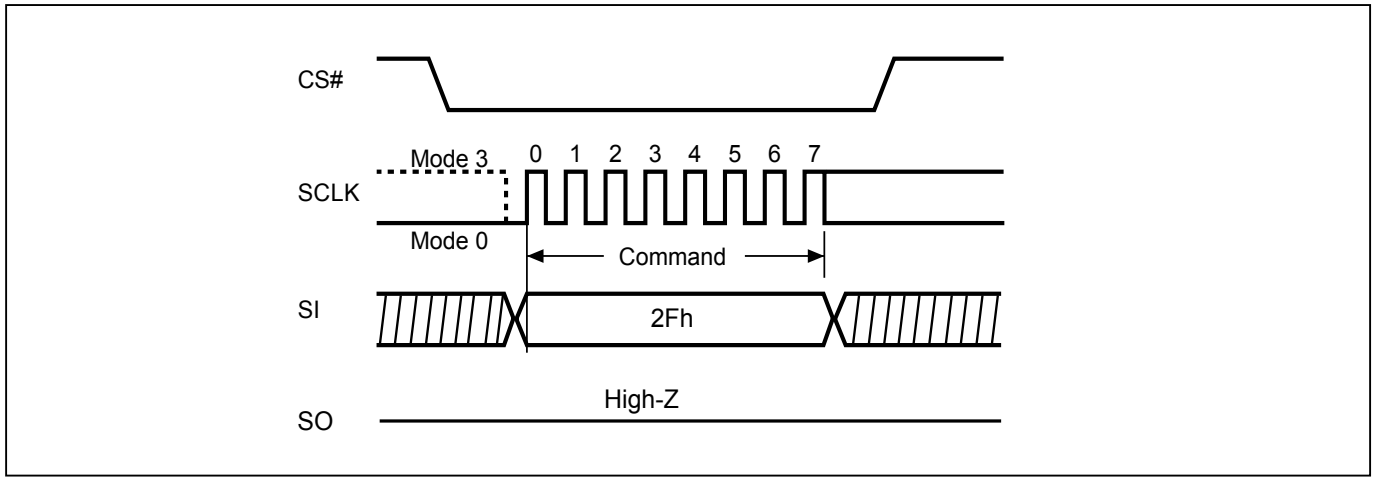

Figure 62. Write Security Register (WRSCUR) Sequence (QPI Mode)

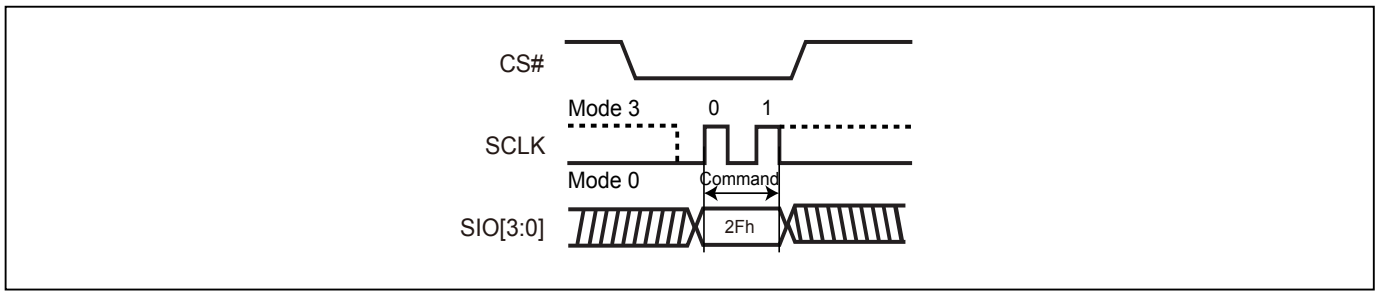

Security Register

The definition of the Security Register bits is as below:

Erase Fail bit. The Erase Fail bit indicates the status of last Erase operation. The bit will be set to "1" if the erase operation failed or the erase region is protected. It will be automatically cleared to "0" if the next erase operation succeeds. Please note that it does not interrupt or stop any operation in the flash memory.

Program Fail bit. The Program Fail bit indicates the status of the last Program operation. The bit will be set to "1" if the program operation failed or the program region is protected. It will be automatically cleared to "0" if the next program operation succeeds. Please note that it does not interrupt or stop any operation in the flash memory.

Erase Suspend bit. Erase Suspend Bit (ESB) indicates the status of Erase Suspend operation. Users may use ESB to identify the state of flash memory. After the flash memory is suspended by Erase Suspend command, ESB is set to "1". ESB is cleared to "0" after erase operation resumes.

Program Suspend bit. Program Suspend Bit (PSB) indicates the status of Program Suspend operation. Users may use PSB to identify the state of flash memory. After the flash memory is suspended by Program Suspend command, PSB is set to "1". PSB is cleared to "0" after program operation resumes.

Lock-down Secured OTP (LDSO) bit. By writing WRSCUR instruction, the LDSO bit may be set to "1" for customer lock-down purpose. However, once the bit is set to "1" (lock-down), the LDSO bit and the 1st 4K-bit Secured OTP area cannot be updated any more. While it is in 8K-bit secured OTP mode, main array access is not allowed.

Secured OTP Indicator bit. The Secured OTP indicator bit shows the 2nd 4K-bit Secured OTP area is locked by factory or not. When it is "0", it indicates non-factory lock; "1" indicates factory-lock.

Table 11. Security Register Definition

bit7	bit6	bit5	bit4	bit3	bit2	bit1	bit0
Reserved	E_FAIL	P_FAIL	Reserved	ESB (Erase Suspend bit)	PSB (Program Suspend bit)	LDSO (lock-down 1st 4K-bit Secured OTP)	Secured OTP Indicator bit (2nd 4K-bit Secured OTP)
-	0= normal Erase succeed 1= indicate Erase failed (default=0)	0= normal Program succeed 1= indicate Program failed (default=0)	-	0= Erase is not suspended 1= Erase suspended (default=0)	0= Program is not suspended 1= Program suspended (default=0)	0= not lockdown 1= lock-down (Secured OTP can no longer be programmed)	0= nonfactory lock 1= factory lock
Volatile bit	Volatile bit	Volatile bit	Volatile bit	Volatile bit	Volatile bit	Non-volatile bit (OTP)	Non-volatile bit (OTP)

9-33. Program Suspend and Erase Suspend

The Suspend instruction interrupts a Page Program, Sector Erase, or Block Erase operation to allow access to the memory array. After the program or erase operation has entered the suspended state, the memory array can be read except for the page being programmed or the sector or block being erased (*"Table 12. Readable Area of Memory While a Program or Erase Operation is Suspended"*).

Table 12. Readable Area of Memory While a Program or Erase Operation is Suspended

Suspended Operation	Readable Region of Memory Array
Page Program	All but the Page being programmed
Sector Erase (4KB)	All but the 4KB Sector being erased
Block Erase (32KB)	All but the 32KB Block being erased
Block Erase (64KB)	All but the 64KB Block being erased

When the Serial NOR Flash receives the Suspend instruction, there is a latency of tPSL or tESL (*"Figure 63. Suspend to Read Latency"*) before the Write Enable Latch (WEL) bit clears to “0” and the PSB or ESB sets to “1”, after which the device is ready to accept one of the commands listed in *"Table 13. Acceptable Commands During Program/Erase Suspend after tPSL/tESL"* (e.g. FAST READ). Refer to *"Table 21. AC CHARACTERISTICS"* for tPSL and tESL timings. *"Table 14. Acceptable Commands During Suspend (tPSL/tESL not required)"* lists the commands for which the tPSL and tESL latencies do not apply. For example, RDSR, RDSCUR, RSTEN, and RST can be issued at any time after the Suspend instruction.

Security Register bit 2 (PSB) and bit 3 (ESB) can be read to check the suspend status. The PSB (Program Suspend Bit) sets to “1” when a program operation is suspended. The ESB (Erase Suspend Bit) sets to “1” when an erase operation is suspended. The PSB or ESB clears to “0” when the program or erase operation is resumed.

Figure 63. Suspend to Read Latency

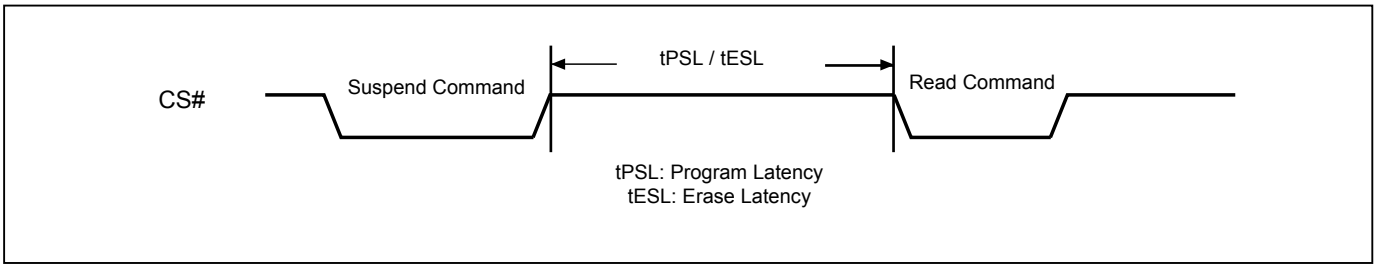

Table 13. Acceptable Commands During Program/Erase Suspend after tPSL/tESL

Command Name	Command Code	Suspend Type	
		Program Suspend	Erase Suspend
READ	03h	•	•
FAST READ	0Bh	•	•
DREAD	3Bh	•	•
QREAD	6Bh	•	•
2READ	BBh	•	•
4READ	EBh	•	•
W4READ	E7h	•	•
RDSFDP	5Ah	•	•
RDID	9Fh	•	•
QPIID	AFh	•	•
REMS	90h	•	•
EQIO	35h	•	•
RSTQIO	F5h	•	•
ENSO	B1h	•	•
EXSO	C1h	•	•
SBL	C0h	•	•
WREN	06h	•	•
RESUME	7Ah or 30h	•	•
PP	02h		•
4PP	38h		•

Table 14. Acceptable Commands During Suspend (tPSL/tESL not required)

Command Name	Command Code	Suspend Type	
		Program Suspend	Erase Suspend
WRDI	04h	•	•
RDSR	05h	•	•
RDCR	15h	•	•
RDSCUR	2Bh	•	•
RES	ABh	•	•
RSTEN	66h	•	•
RST	99h	•	•
NOP	00h	•	•

9-33-1. Erase Suspend to Program

The “Erase Suspend to Program” feature allows Page Programming while an erase operation is suspended. Page Programming is permitted in any unprotected memory except within the sector of a suspended Sector Erase operation or within the block of a suspended Block Erase operation. The Write Enable (WREN) instruction must be issued before any Page Program instruction.

A Page Program operation initiated within a suspended erase cannot itself be suspended and must be allowed to finish before the suspended erase can be resumed. The Status Register can be polled to determine the status of the Page Program operation. The WEL and WIP bits of the Status Register will remain “1” while the Page Program operation is in progress and will both clear to “0” when the Page Program operation completes.

Figure 64. Suspend to Program Latency

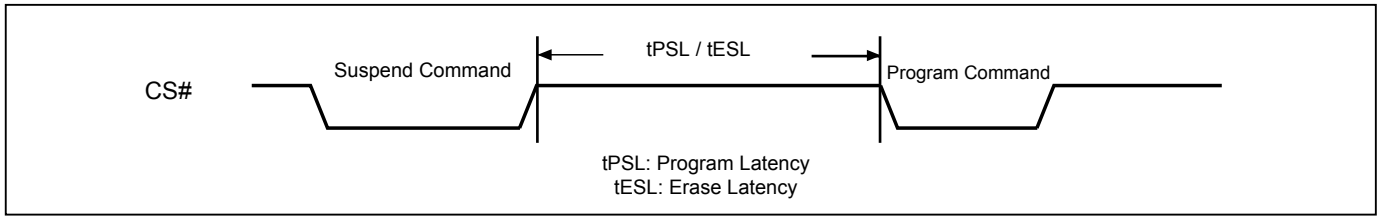

9-34. Program Resume and Erase Resume

The Resume instruction resumes a suspended Page Program, Sector Erase, or Block Erase operation. Before issuing the Resume instruction to restart a suspended erase operation, make sure that there is no Page Program operation in progress.

Immediately after the Serial NOR Flash receives the Resume instruction, the WEL and WIP bits are set to “1” and the PSB or ESB is cleared to “0”. The program or erase operation will continue until finished (*"Figure 65. Resume to Read Latency"*) or until another Suspend instruction is received. A resume-to-suspend latency of tPRS or tERS must be observed before issuing another Suspend instruction (*"Figure 66. Resume to Suspend Latency"*).

Please note that the Resume instruction will be ignored if the Serial NOR Flash is in “Performance Enhance Mode”. Make sure the Serial NOR Flash is not in “Performance Enhance Mode” before issuing the Resume instruction.

Figure 65. Resume to Read Latency

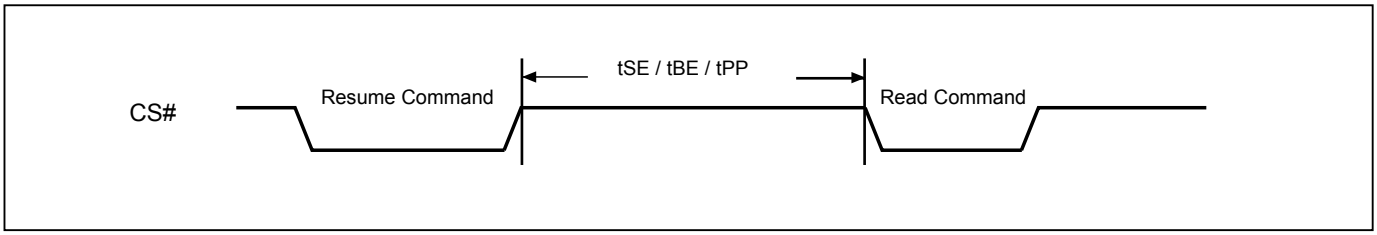

Figure 66. Resume to Suspend Latency

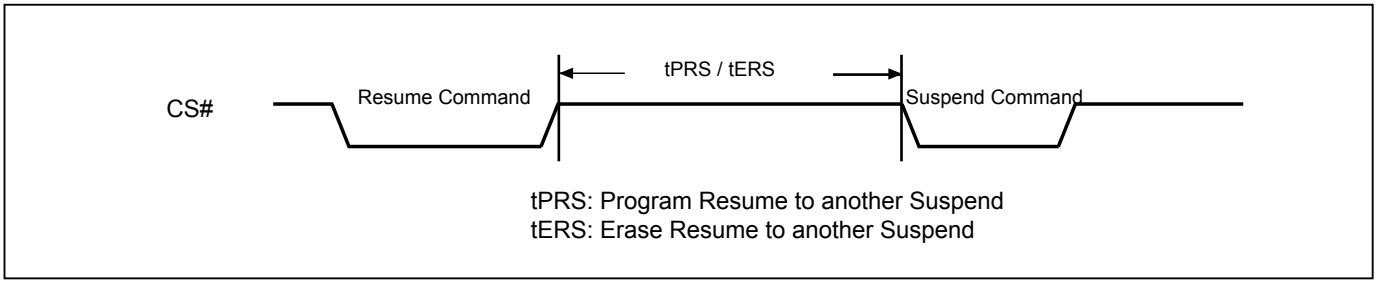

9-35. No Operation (NOP)

The “No Operation” command is only able to terminate the Reset Enable (RSTEN) command and will not affect any other command.

Both SPI (8 clocks) and QPI (2 clocks) command cycles can be accepted by this instruction. The SIO[3:1] are don't care during SPI mode.

9-36. Software Reset (Reset-Enable (RSTEN) and Reset (RST))

The Software Reset operation combines two instructions: Reset-Enable (RSTEN) command following a Reset (RST) command. It returns the device to a standby mode. All the volatile bits and settings will be cleared then, which makes the device return to the default status as power on.

To execute Reset command (RST), the Reset-Enable (RSTEN) command must be executed first to perform the Reset operation. If there is any other command to interrupt after the Reset-Enable command, the Reset-Enable will be invalid.

Both SPI (8 clocks) and QPI (2 clocks) command cycles can be accepted by this instruction. The SIO[3:1] are don't care during SPI mode.

If the Reset command is executed during program or erase operation, the operation will be disabled, the data under processing could be damaged or lost.

The reset time is different depending on the last operation. For details, please refer to *"Table 16. Reset Timing-(Other Operation)"* for tREADY2.

Figure 67. Software Reset Recovery

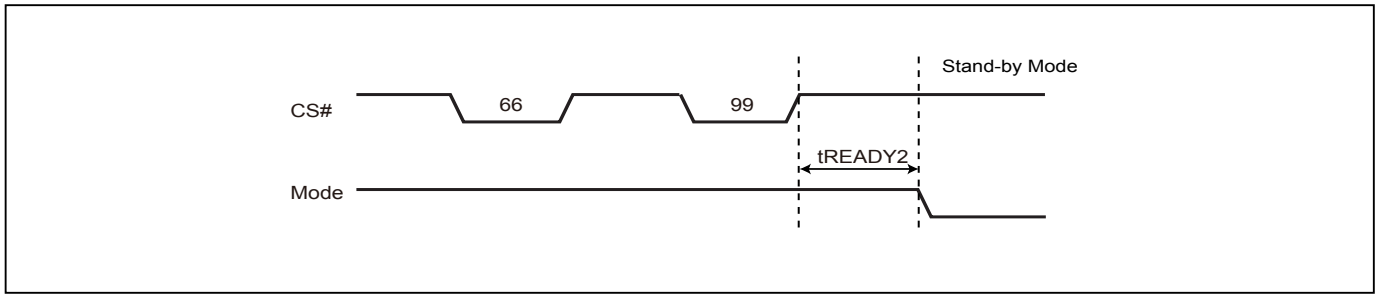

Note: Refer to *"Table 16. Reset Timing-(Other Operation)"* for tREADY2.

Figure 68. Reset Sequence (SPI mode)

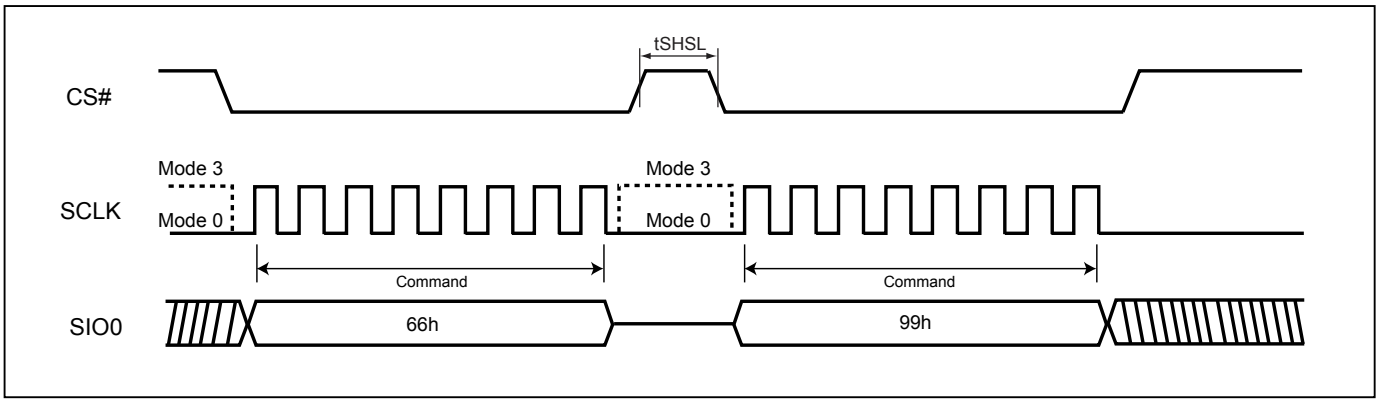

Figure 69. Reset Sequence (QPI mode)

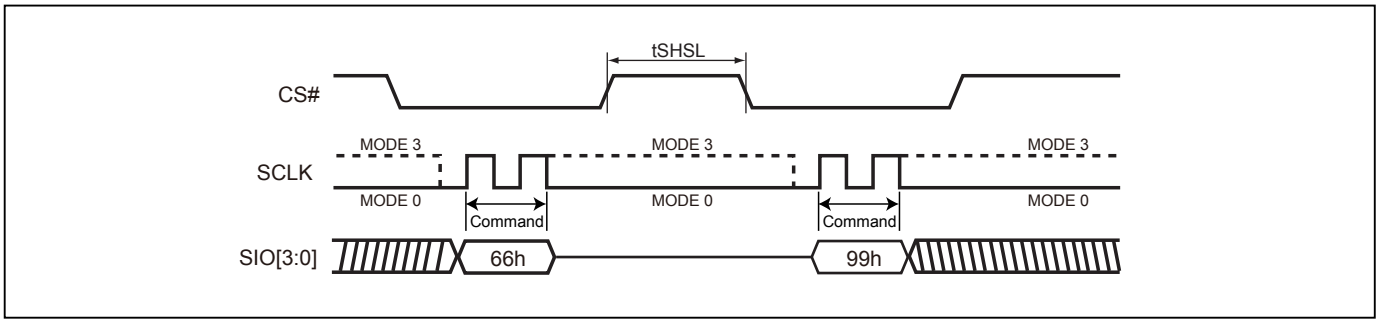

9-37. Read SFDP Mode (RDSFDP)

The Serial Flash Discoverable Parameter (SFDP) standard provides a consistent method of describing the functional and feature capabilities of serial flash devices in a standard set of internal parameter tables. These parameter tables can be interrogated by host system software to enable adjustments needed to accommodate divergent features from multiple vendors. The concept is similar to the one found in the Introduction of JEDEC Standard, JESD68 on CFI.

The sequence of issuing RDSFDP instruction is CS# goes low→send RDSFDP instruction (5Ah)→send 3 address bytes on SI pin→send 1 dummy byte on SI pin→read SFDP code on SO→to end RDSFDP operation, drive CS# high at any time during data out.

SFDP is a JEDEC Standard, JESD216B.

For SFDP register values detail, please contact local Macronix sales channel for Application Note.

Figure 70. Read Serial Flash Discoverable Parameter (RDSFDP) Sequence

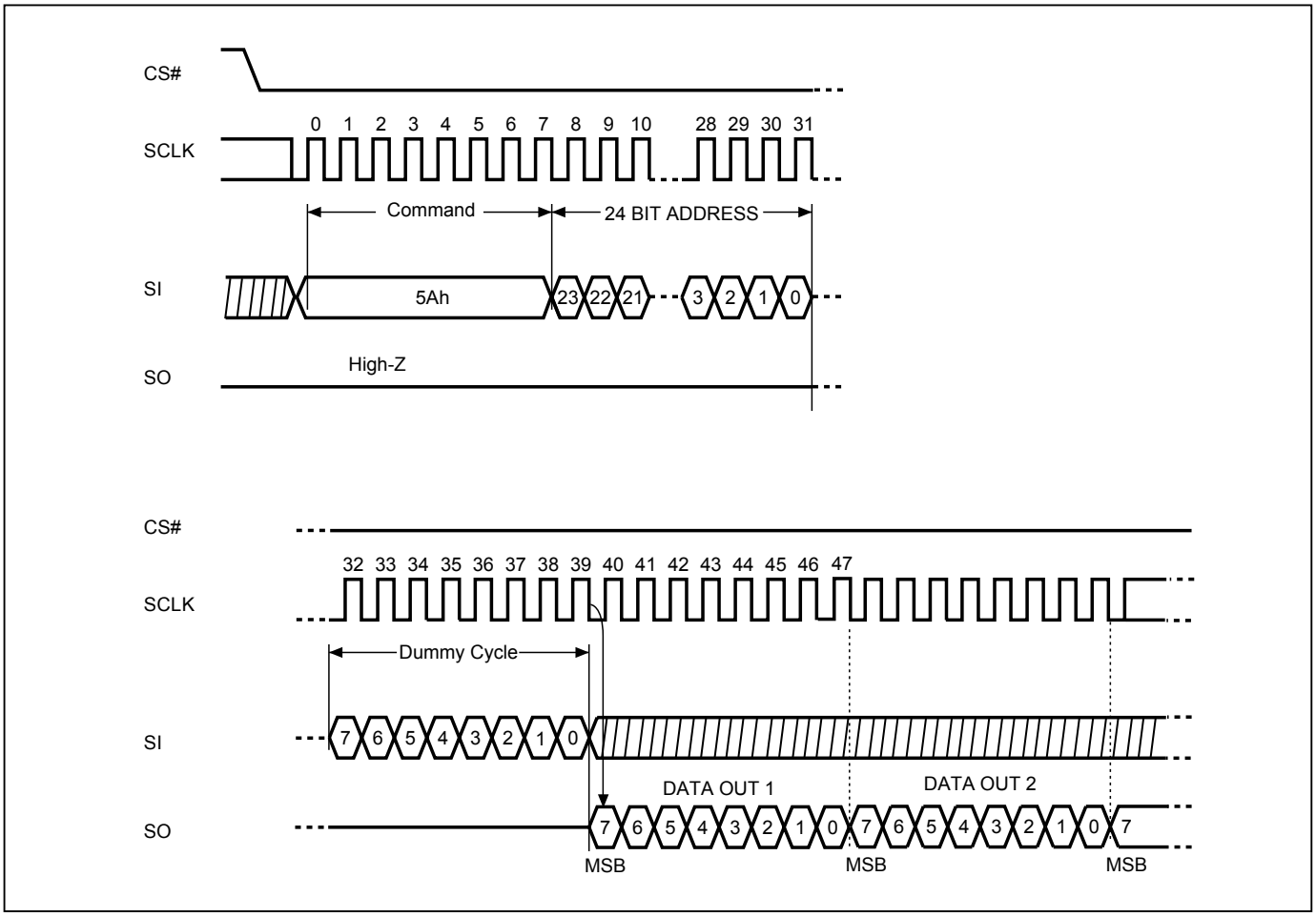

10. RESET

Driving the RESET# pin low for a period of tRLRH or longer will reset the device. After the reset cycle, the device is in the following states:
- Standby mode
- All the volatile bits such as WEL/WIP/SRAM lock bit will return to the default status as power on.

If the device is under programming or erasing, driving the RESET# pin low will also terminate the operation and data could be lost. During the resetting cycle, the SO data becomes high impedance and the current will be reduced to minimum.

Figure 71. RESET Timing

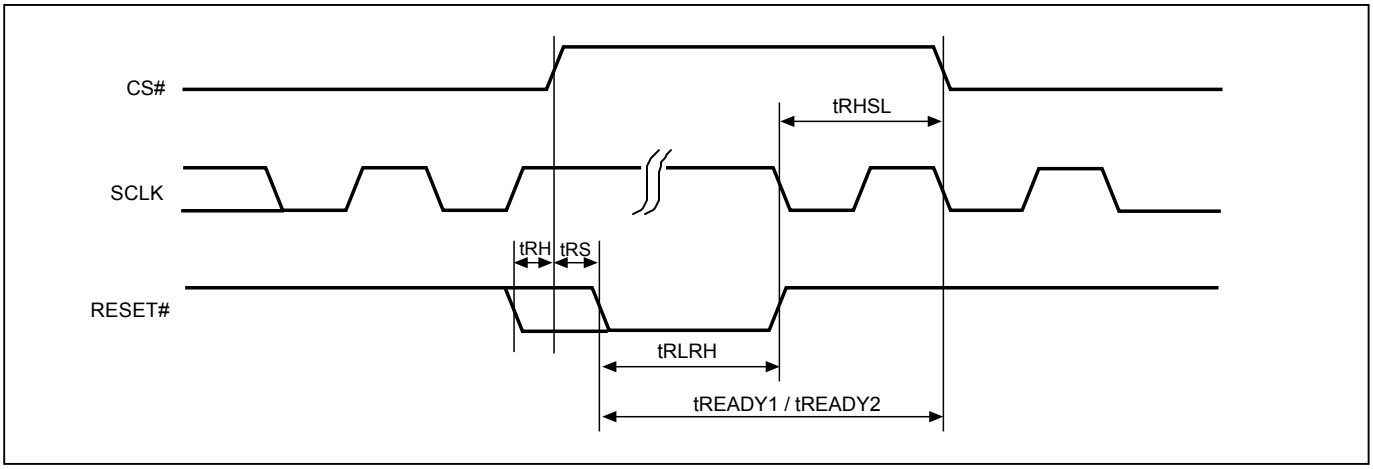

Table 15. Reset Timing-(Power On)

Symbol	Parameter	Min.	Typ.	Max.	Unit
tRHSL	Reset# high before CS# low	10			us
tRS	Reset# setup time	15			ns
tRH	Reset# hold time	15			ns
tRLRH	Reset# low pulse width	10			us
tREADY1	Reset Recovery time	35			us

Table 16. Reset Timing-(Other Operation)

Symbol	Parameter	Min.	Typ.	Max.	Unit
tRHSL	Reset# high before CS# low	10			us
tRS	Reset# setup time	15			ns
tRH	Reset# hold time	15			ns
tRLRH	Reset# low pulse width	10			us
tREADY2	Reset Recovery time (During instruction decoding)	40			us
	Reset Recovery time (for read operation)	35			us
	Reset Recovery time (for program operation)	310			us
	Reset Recovery time(for SE4KB operation)	12			ms
	Reset Recovery time (for BE64KB/BE32KB operation)	25			ms
	Reset Recovery time (for Chip Erase operation)	100			ms
	Reset Recovery time (for WRSR operation)	40			ms

10-1. In-Band-Reset

In-Band RESET is JEDEC -JESD252 compliance, which specifies a signaling protocol to perform a hardware reset by using only the CS#, SCLK, and the SI pin without a dedicated hardware RESET# pin.

The procedure of initiating the reset request is: CS# goes low → SCLK remains stable in either a high or low state → SI pin goes low by the host, simultaneously with CS# going low → CS# goes high.

After the fourth CS# pulse, the flash device triggers its internal reset. Please note that SI is low on the first CS# pulse, high on the second CS# pulse, low on the third CS# pulse, high on the fourth CS# pulse. This provides a 5h pattern to differentiate it from random noise.

Table 17. In-Band-Reset Parameters

Symbol	Parameter	Min.	Typ.	Max.	Unit
tCSL	CS# Low hold Time	500			ns
tCSH	CS# High hold time	500			ns
tSISP	Serial Data Input Setup Time	5			ns
tSIHD	Serial Data Input Hold Time	5			ns
tRESET	RESET Recovery Time			100	ms

Figure 72. Reset Signaling Protocol

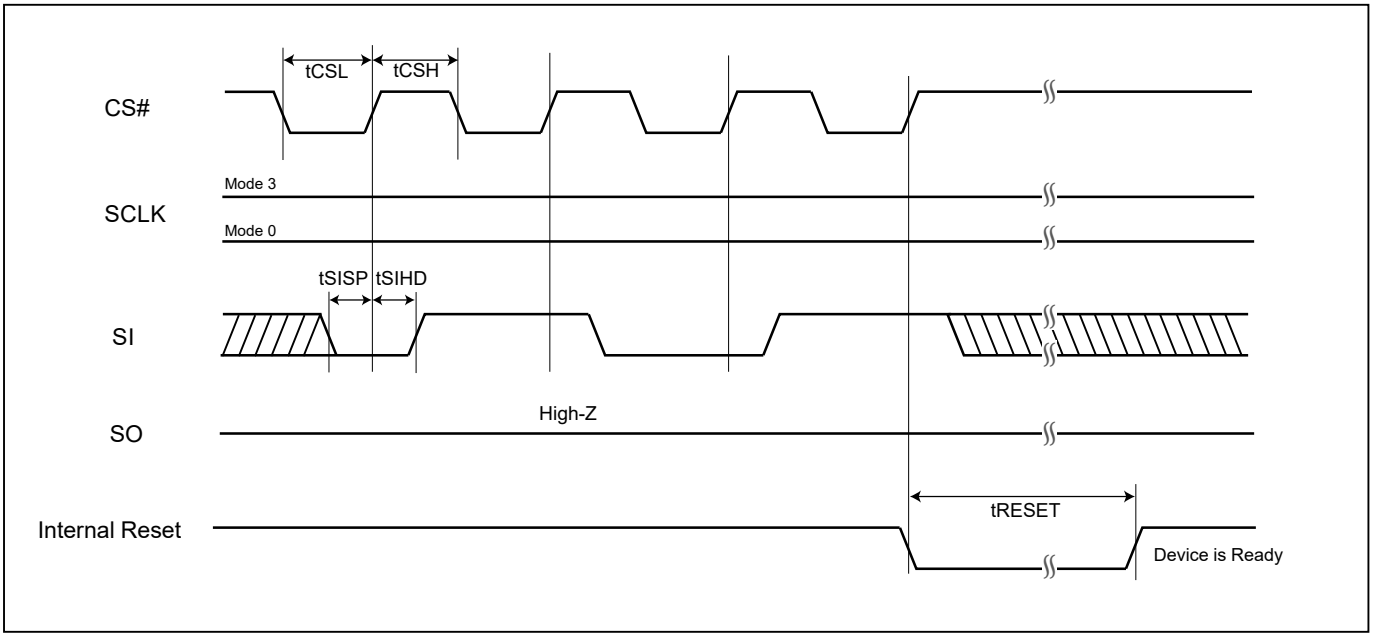

11. POWER-ON STATE

The device is in the states below when power-up:
- Standby mode (please note it is not deep power-down mode)
- Write Enable Latch (WEL) bit is reset

The device must not be selected during power-up and power-down stage unless the VCC achieves below correct level:
- VCC minimum at power-up stage and then after a delay of tVSL
- GND at power-down

Please note that a pull-up resistor on CS# may ensure a safe and proper power-up/down level.

An internal power-on reset (POR) circuit may protect the device from data corruption and inadvertent data change during power up state. When VCC is lower than VWI (POR threshold voltage value), the internal logic is reset and the flash device has no response to any command.

For further protection on the device, if the VCC does not reach the VCC minimum level, the correct operation is not guaranteed. The read, write, erase, and program command should be sent after the below time delay:
- tVSL after VCC reached VCC minimum level

Please refer to the *"Figure 80. Power-up Timing"*.

Note:
- To stabilize the VCC level, the VCC rail decoupled by a suitable capacitor close to package pins is recommended. (generally around 0.1uF)
- At power-down stage, the VCC drops below VWI level, all operations are disable and device has no response to any command. The data corruption might occur during the stage while a write, program, erase cycle is in progress.

12. ELECTRICAL SPECIFICATIONS

Table 18. ABSOLUTE MAXIMUM RATINGS

RATING		VALUE
Ambient Operating Temperature	Industrial grade	-40°C to 85°C
Storage Temperature		-65°C to 150°C
Applied Input Voltage		-0.5V to VCC+0.5V
Applied Output Voltage		-0.5V to VCC+0.5V
VCC to Ground Potential		-0.5V to 2.5V

NOTICE:
1. Stresses greater than those listed under ABSOLUTE MAXIMUM RATINGS may cause permanent damage to the device. This is stress rating only and functional operational sections of this specification is not implied. Exposure to absolute maximum rating conditions for extended period may affect reliability.
2. Specifications contained within the following tables are subject to change.
3. During voltage transitions, all pins may overshoot Vss to -1.0V and Vcc to +1.0V for periods up to 20ns, as shown in *Figure 73* and *Figure 74.*

Figure 73. Maximum Negative Overshoot Waveform

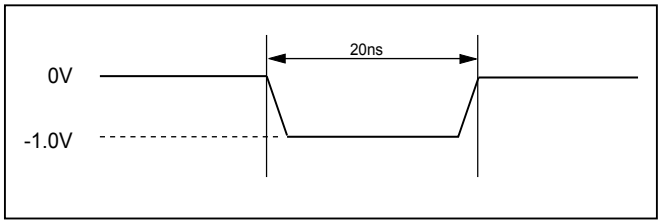

Figure 74. Maximum Positive Overshoot Waveform

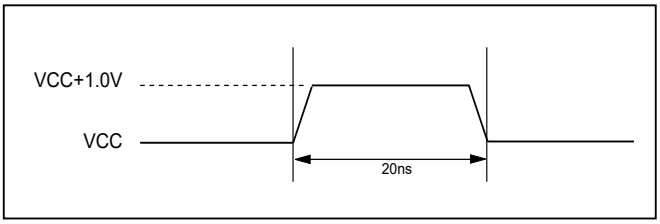

Table 19. CAPACITANCE TA = 25°C, f = 1.0 MHz

Symbol	Parameter	Min.	Typ.	Max.	Unit	Conditions
CIN	Input Capacitance			6	pF	VIN = 0V
COUT	Output Capacitance			8	pF	VOUT = 0V

Figure 75. DATA INPUT TEST WAVEFORMS AND MEASUREMENT LEVEL

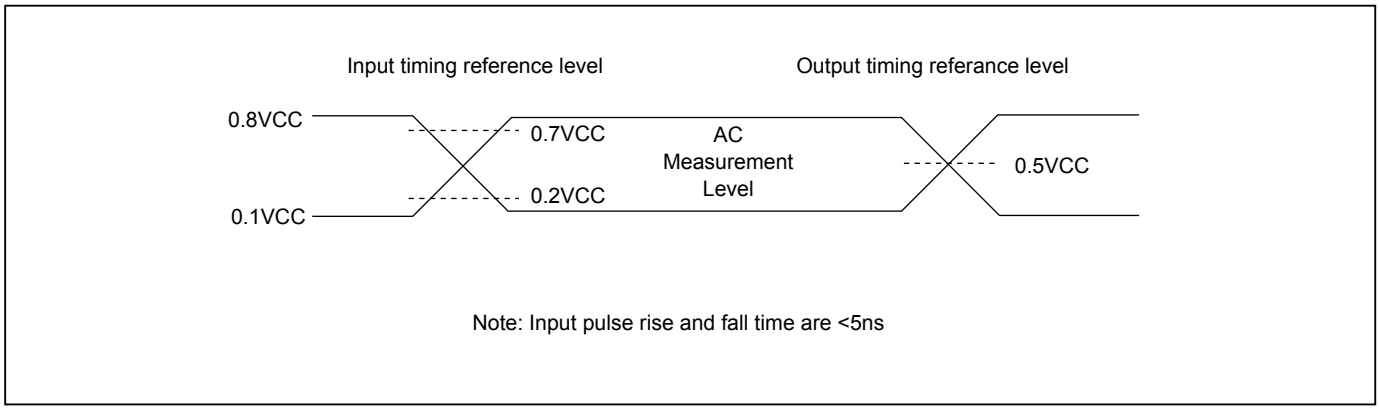

Figure 76. OUTPUT LOADING

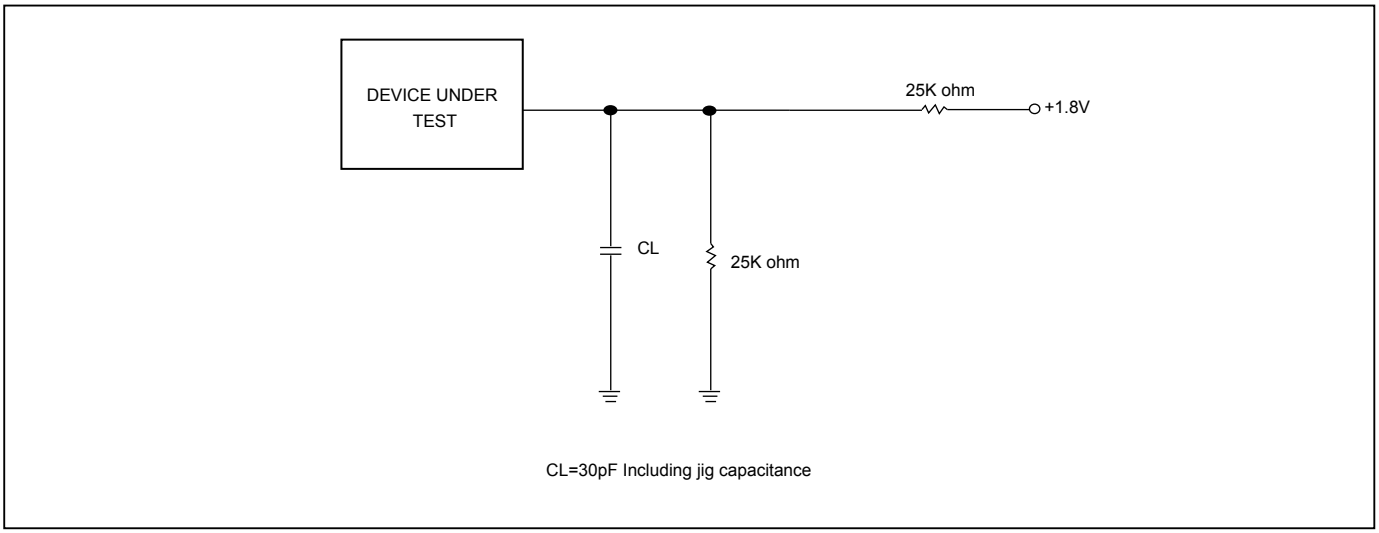

Figure 77. SCLK TIMING DEFINITION

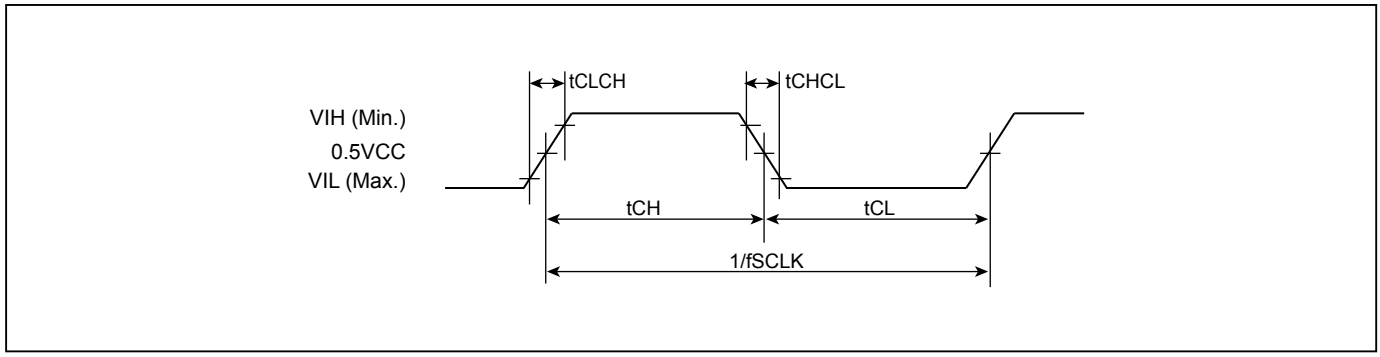

Table 20. DC CHARACTERISTICS

(Temperature = -40°C to 85°C, VCC = 1.65V - 2.0V)

Symbol	Parameter	Notes	Min.	Typ.	Max.	Units	Test Conditions
ILI	Input Load Current	1			±2	uA	VCC = VCC Max, VIN = VCC or GND
ILO	Output Leakage Current	1			±2	uA	VCC = VCC Max, VOUT = VCC or GND
ISB1	VCC Standby Current	1		15	50	uA	VIN = VCC or GND, CS# = VCC
ISB2	Deep Power-down Current			0.05	5	uA	VIN = VCC or GND, CS# = VCC
ICC1	VCC Read	1		11	15	mA	f=133MHz, (4 x I/O read) SCLK=0.1VCC/0.9VCC, SO=Open
				9	12	mA	f=104MHz, (4 x I/O read) SCLK=0.1VCC/0.9VCC, SO=Open
				8	10	mA	f=84MHz, (4 x I/O read) SCLK=0.1VCC/0.9VCC, SO=Open
ICC2	VCC Program Current (PP)	1		10	20	mA	Program in Progress, CS# = VCC
ICC3	VCC Write Status Register (WRSR) Current			10	20	mA	Program status register in progress, CS#=VCC
ICC4	VCC Sector/Block (32K, 64K) Erase Current (SE/BE/BE32K)	1		10	20	mA	Erase in Progress, CS#=VCC
ICC5	VCC Chip Erase Current (CE)	1		15	25	mA	Erase in Progress, CS#=VCC
VIL	Input Low Voltage		-0.5		0.2VCC	V	
VIH	Input High Voltage		0.7VCC		VCC+0.4	V	
VOL	Output Low Voltage				0.2	V	IOL = 100uA
VOH	Output High Voltage		VCC-0.2			V	IOH = -100uA

Notes :

1. Typical values at VCC = 1.8V, T = 25°C. These currents are valid for all product versions (package and speeds).
2. Typical value is calculated by simulation.

Table 21. AC CHARACTERISTICS

(Temperature = -40°C to 85°C, VCC = 1.65V - 2.0V)

Symbol	Alt.	Parameter			Min.	Typ.	Max.	Unit
fSCLK	fC	Clock Frequency for all commands (except Read)			D.C.		133	MHz
fRSCLK	fR	Clock Frequency for READ instructions					50	MHz
fTSCLK	fT	Clock Frequency for 2READ/DREAD instructions			Please refer to *"Table 9. Dummy Cycle and Frequency Table (MHz)"*			MHz
	fQ	Clock Frequency for 4READ/QREAD instructions						MHz
tCH(1)	tCLH	Clock High Time	Others (fSCLK/fTSCLK)	> 50MHz	45% x (1/fSCLK)			ns
					45% x (1/fTSCLK)			
				≤ 50MHz	7			ns
			Normal Read (fRSCLK)		7			ns
tCL(1)	tCLL	Clock Low Time	Others (fSCLK/fTSCLK)	> 50MHz	45% x (1/fSCLK)			ns
					45% x (1/fTSCLK)			
				≤ 50MHz	7			ns
			Normal Read (fRSCLK)		7			ns
tCLCH(5)		Clock Rise Time (peak to peak)			0.1			V/ns
tCHCL(5)		Clock Fall Time (peak to peak)			0.1			V/ns
tSLCH	tCSS	CS# Active Setup Time (relative to SCLK)			5			ns
tCHSL		CS# Not Active Hold Time (relative to SCLK)			5			ns
tDVCH	tDSU	Data In Setup Time			2			ns
tCHDX	tDH	Data In Hold Time			3			ns
tCHSH		CS# Active Hold Time (relative to SCLK)			5			ns
tSHCH		CS# Not Active Setup Time (relative to SCLK)			5			ns
tSHSL	tCSH	CS# Deselect Time	From Read to next Read		7			ns
			From Write/Erase/Program to Read Status Register		30			ns
tSHQZ(5)	tDIS	Output Disable Time					8	ns
tCLQV	tV	Clock Low to Output Valid Loading: 30pF/15pF	Loading: 30pF				8	ns
			Loading: 15pF				6	ns
tCLQX	tHO	Output Hold Time	Loading: 30pF		1			ns
			Loading: 15pF		1			ns
tWHSL(3)		Write Protect Setup Time			20			ns
tSHWL(3)		Write Protect Hold Time			100			ns
tDP(5)		CS# High to Deep Power-down Mode					10	us
tRES1		Recovery Time for the Release from Deep Power Down Mode					30	us
tW		Write Status/Configuration Register Cycle Time					40	ms
tBP		Byte-Program				18	40	us
tPP		Page Program Cycle Time				0.4	3	ms
tSE		Sector Erase Cycle Time				30	200	ms
tBE32		Block Erase (32KB) Cycle Time				150	1000	ms
tBE		Block Erase (64KB) Cycle Time				300	2000	ms
tCE		Chip Erase Cycle Time				2.25	6.25	s
tESL(6)		Erase Suspend Latency					25	us
tPSL(6)		Program Suspend Latency					25	us
tPRS(7)		Latency between Program Resume and next Suspend			0.3	100		us
tERS(8)		Latency between Erase Resume and next Suspend			0.3	100		us

Notes:

1. tCH + tCL must be greater than or equal to 1/ Frequency.
2. Typical values given for TA=25°C. Not 100% tested.
3. Only applicable as a constraint for a WRSR instruction when SRWD is set at 1.
4. Test condition is shown as *"Figure 75. DATA INPUT TEST WAVEFORMS AND MEASUREMENT LEVEL"* and *"Figure 76. OUTPUT LOADING"*.
5. The value guaranteed by characterization, not 100% tested in production.
6. Latency time is required to complete Erase/Program Suspend operation until WIP bit is "0".
7. For tPRS, minimum timing must be observed before issuing the next program suspend command. However, a period equal to or longer than the typical timing is required in order for the program operation to make progress.
8. For tERS, minimum timing must be observed before issuing the next erase suspend command. However, a period equal to or longer than the typical timing is required in order for the erase operation to make progress.

13. OPERATING CONDITIONS

At Device Power-Up and Power-Down

AC timing illustrated in *"Figure 78. AC Timing at Device Power-Up"* and *"Figure 79. Power-Down Sequence"* are for the supply voltages and the control signals at device power-up and power-down. If the timing in the figures is ignored, the device will not operate correctly.

During power-up and power-down, CS# needs to follow the voltage applied on VCC to keep the device not to be selected. The CS# can be driven low when VCC reach Vcc(min.) and wait a period of tVSL.

Figure 78. AC Timing at Device Power-Up

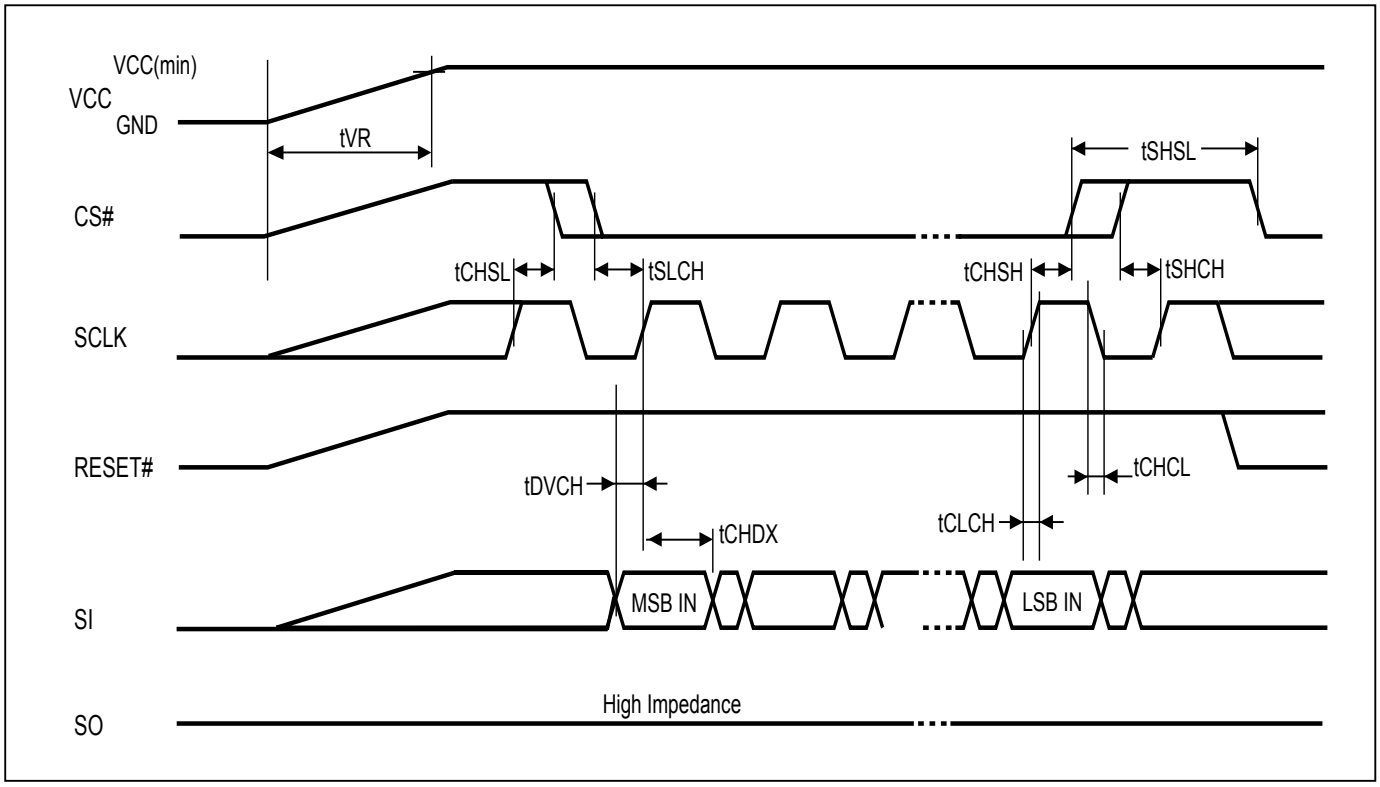

Symbol	Parameter	Notes	Min.	Max.	Unit
tVR	VCC Rise Time	1		500000	us/V

Notes :
1. Sampled, not 100% tested.
2. For AC spec tCHSL, tSLCH, tDVCH, tCHDX, tSHSL, tCHSH, tSHCH, tCHCL, tCLCH in the figure, please refer to *"Table 21. AC CHARACTERISTICS"*.

Figure 79. Power-Down Sequence

During power-down, CS# needs to follow the voltage drop on VCC to avoid mis-operation.

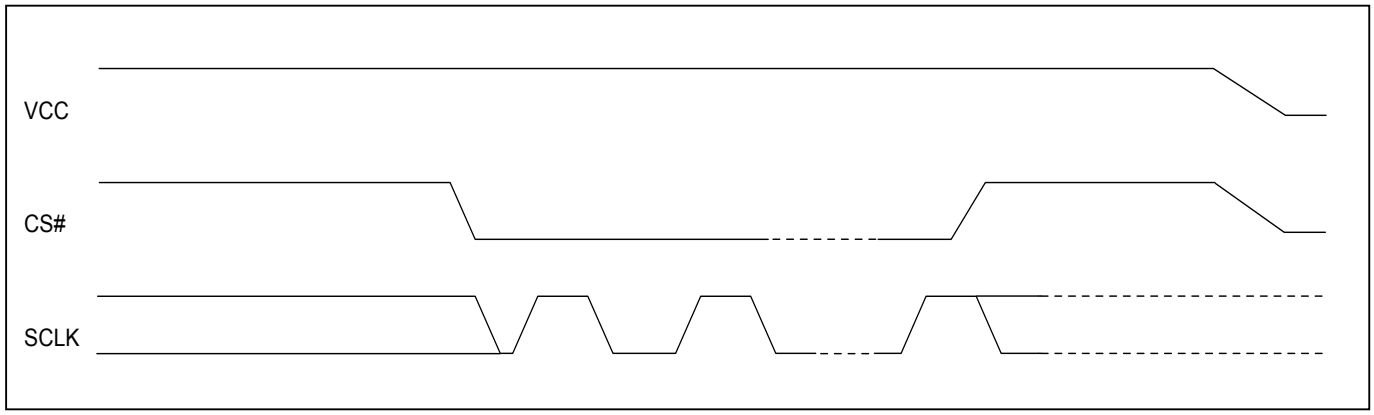

Figure 80. Power-up Timing

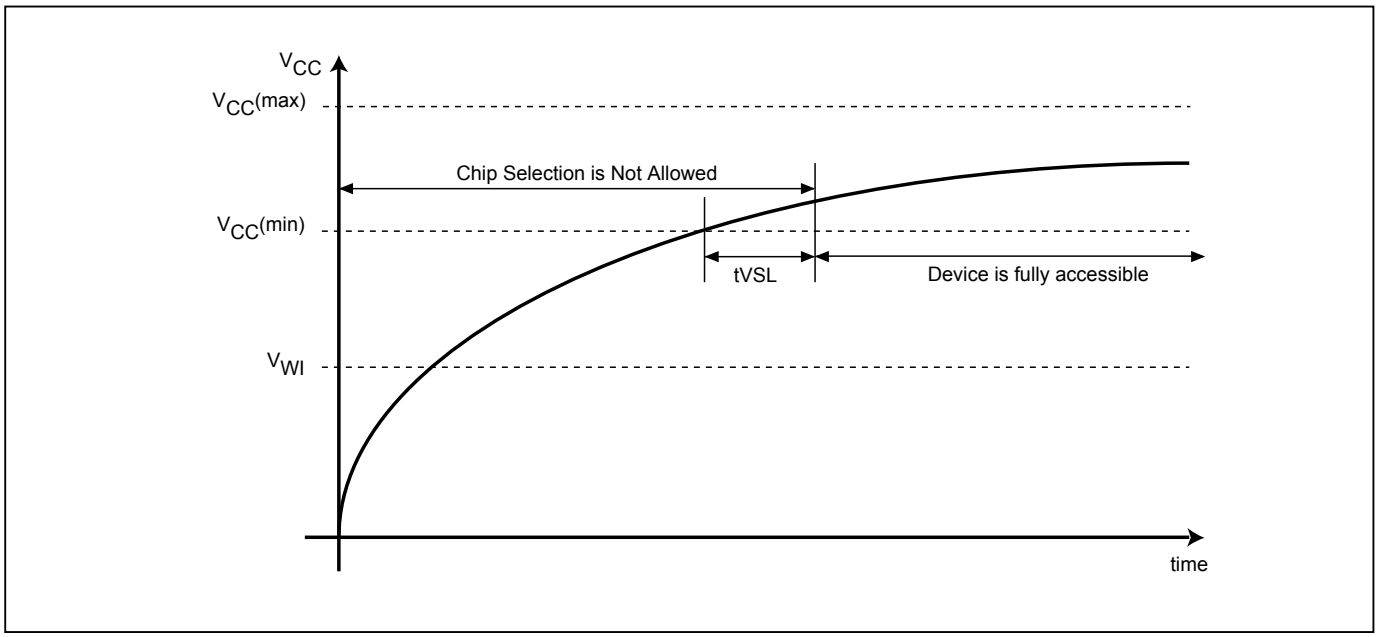

Figure 81. Power Up/Down and Voltage Drop

When powering down the device, VCC must drop below V_{PWD} for at least tPWD to ensure the device will initialize correctly during power up. Please refer to *"Figure 81. Power Up/Down and Voltage Drop"* and *"Table 22. Power-Up/Down Voltage and Timing"* below for more details.

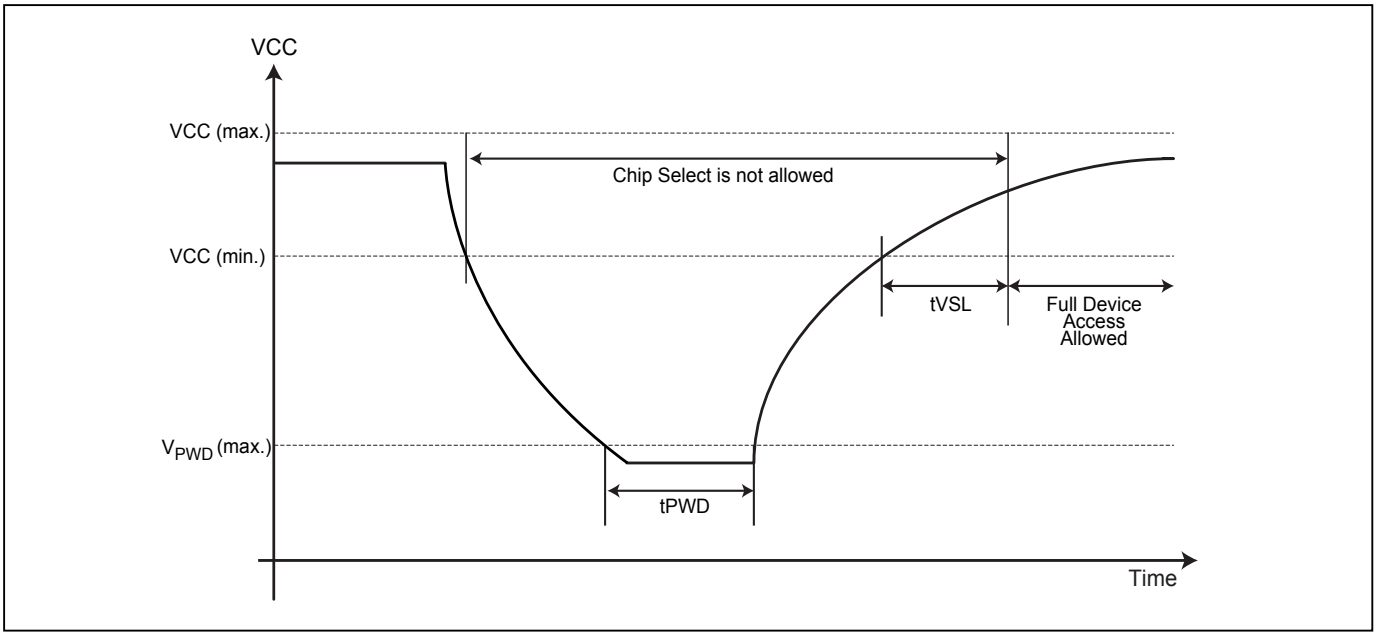

Table 22. Power-Up/Down Voltage and Timing

Symbol	Parameter	Min.	Max.	Unit
tVSL	VCC(min.) to device operation	800		us
VWI	Write Inhibit Voltage	1.0	1.4	V
V_{PWD}	VCC voltage needed to below V_{PWD} for ensuring initialization will occur		0.9	V
tPWD	The minimum duration for ensuring initialization will occur	300		us
VCC	VCC Power Supply	1.65	2.0	V

Note: These parameters are characterized only.

13-1. INITIAL DELIVERY STATE

The device is delivered with the memory array erased: all bits are set to 1 (each byte contains FFh). The Status Register contains 00h (all Status Register bits are 0).

14. ERASE AND PROGRAMMING PERFORMANCE

Parameter	Min.	Typ. (1)	Max. (2)	Unit
Write Status Register Cycle Time			40	ms
Sector Erase Cycle Time (4KB)		30	200	ms
Block Erase Cycle Time (32KB)		0.15	1	s
Block Erase Cycle Time (64KB)		0.3	2	s
Chip Erase Cycle Time		2.25	6.25	s
Byte Program Time (via page program command)		18	40	us
Page Program Time		0.4	3	ms
Erase/Program Cycle		100,000		cycles

Note:
1. Typical program and erase time assumes the following conditions: 25°C, 1.8V, and checkerboard pattern.
2. Under worst conditions of 1.65V, highest operation temperature, post program/erase cycling.
3. System-level overhead is the time required to execute the first-bus-cycle sequence for the programming command.

15. ERASE AND PROGRAMMING PERFORMANCE (Factory Mode)

Parameter	Min.	Typ.	Max.	Unit
Sector Erase Cycle Time (4KB)		15		ms
Block Erase Cycle Time (32KB)		0.1		s
Block Erase Cycle Time (64KB)		0.2		s
Chip Erase Cycle Time		2		s
Page Program Time		0.33		ms
Erase/Program Cycle			50	cycles

Notice:
1. Factory Mode must be operated in 20°C to 45°C and VCC 1.8V-2.0V.
2. In Factory mode, the Erase/Program operation should not exceed 50 cycles, and "ERASE AND PROGRAMMING PERFORMANCE" 100k cycles will not be affected.
3. During factory mode, Suspend command (75h or B0h) cannot be executed.

16. DATA RETENTION

Parameter	Condition	Min.	Max.	Unit
Data retention	55˚C	20		years

17. LATCH-UP CHARACTERISTICS

	Min.	Max.
Input Voltage with respect to GND on all power pins		1.5 VCCmax
Input Current on all non-power pins	-100mA	+100mA
Test conditions: VCC = VCCmax, one pin at a time (compliant to JEDEC JESD78 standard).		

18. ORDERING INFORMATION

Please contact Macronix regional sales for the latest product selection and available form factors.

PART NO.	Package	Temp.	I/O Configuration			H/W Configuration	Remark
			CS#	Default I/O	Dummy Cycle	H/W Pin	
MX25U80356M1I02	8-SOP (150mil)	-40°C to 85°C	1 Pin	Standard	Standard	Reset#	
MX25U80356M2I02	8-SOP (200mil)	-40°C to 85°C	1 Pin	Standard	Standard	Reset#	
MX25U80356ZCI02	8-XSON (4x4mm)	-40°C to 85°C	1 Pin	Standard	Standard	Reset#	
MX25U80356ZUI02	8-USON (2x3mm)	-40°C to 85°C	1 Pin	Standard	Standard	Reset#	

19. PART NAME DESCRIPTION

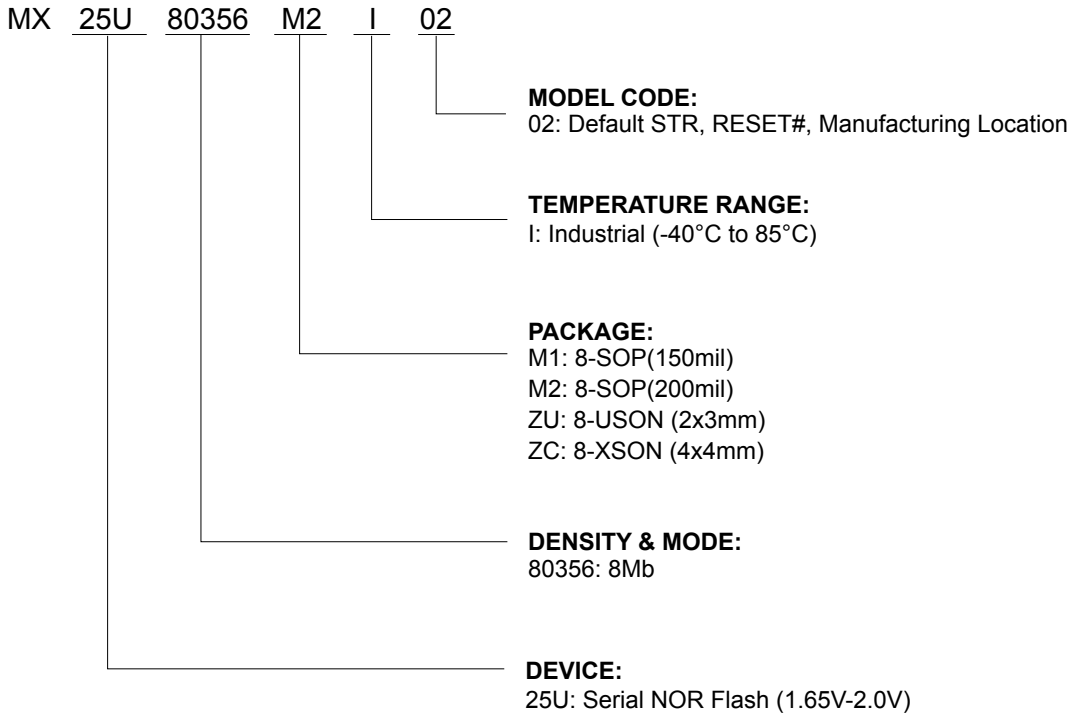

20. PACKAGE INFORMATION

20-1. 8-pin SOP (200mil)

Doc. Title: Package Outline for SOP 8L 200MIL

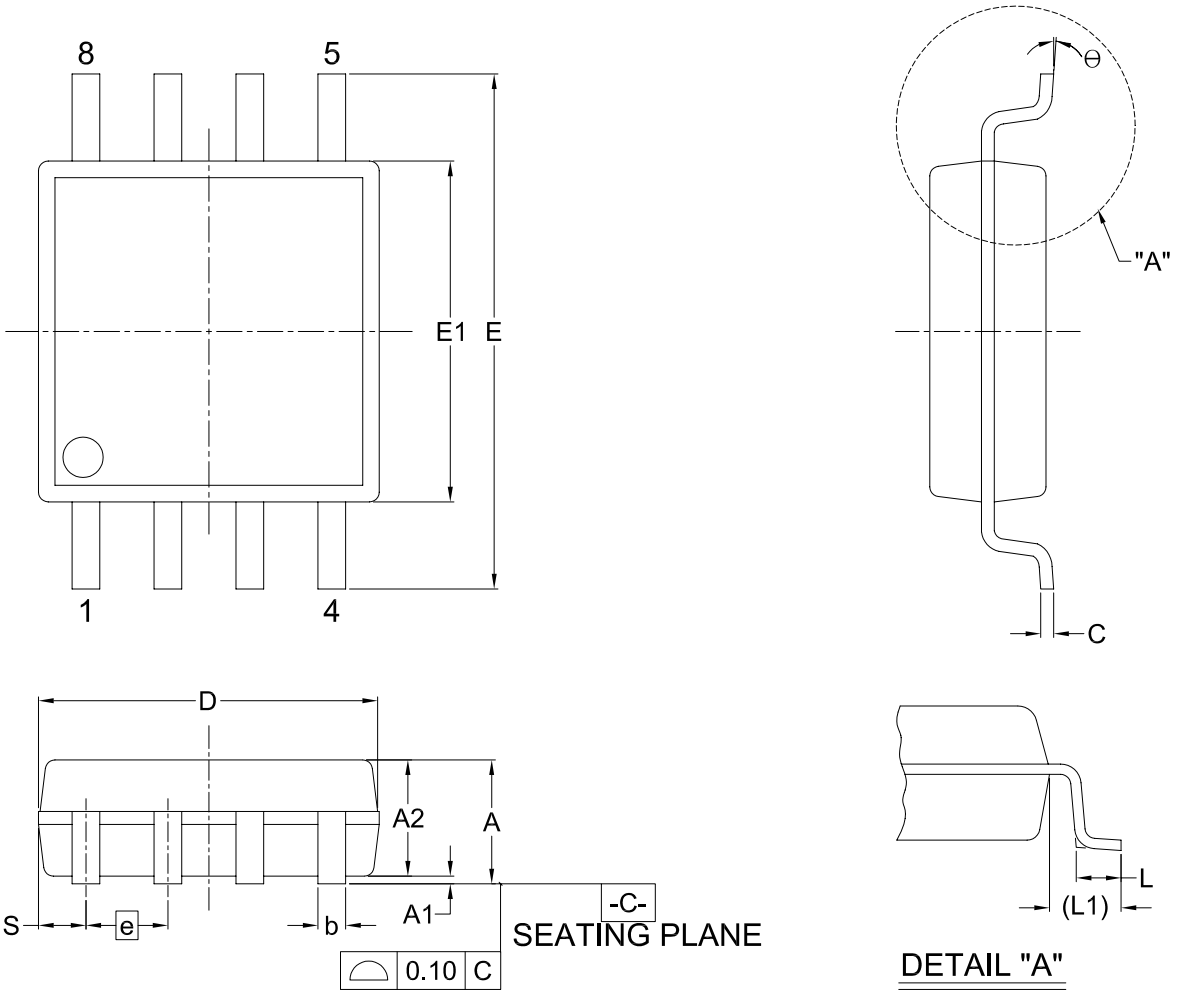

Dimensions (inch dimensions are derived from the original mm dimensions)

SYMBOL / UNIT		A	A1	A2	b	C	D	E	E1	e	L	L1	S	θ
mm	Min.	1.75	0.05	1.70	0.36	0.19	5.13	7.70	5.18	---	0.50	1.21	0.62	0°
	Nom.	1.95	0.15	1.80	0.41	0.20	5.23	7.90	5.28	1.27	0.65	1.31	0.74	5°
	Max.	2.16	0.20	1.91	0.51	0.25	5.33	8.10	5.38	---	0.80	1.41	0.88	8°
Inch	Min.	0.069	0.002	0.067	0.014	0.007	0.202	0.303	0.204	---	0.020	0.048	0.024	0°
	Nom.	0.077	0.006	0.071	0.016	0.008	0.206	0.311	0.208	0.050	0.026	0.052	0.029	5°
	Max.	0.085	0.008	0.075	0.020	0.010	0.210	0.319	0.212	---	0.031	0.056	0.035	8°

20-2. 8-land XSON(4x4mm)

Doc. Title: Package Outline for XSON 8L (4x4x0.5MM, LEAD PITCH 0.8MM)

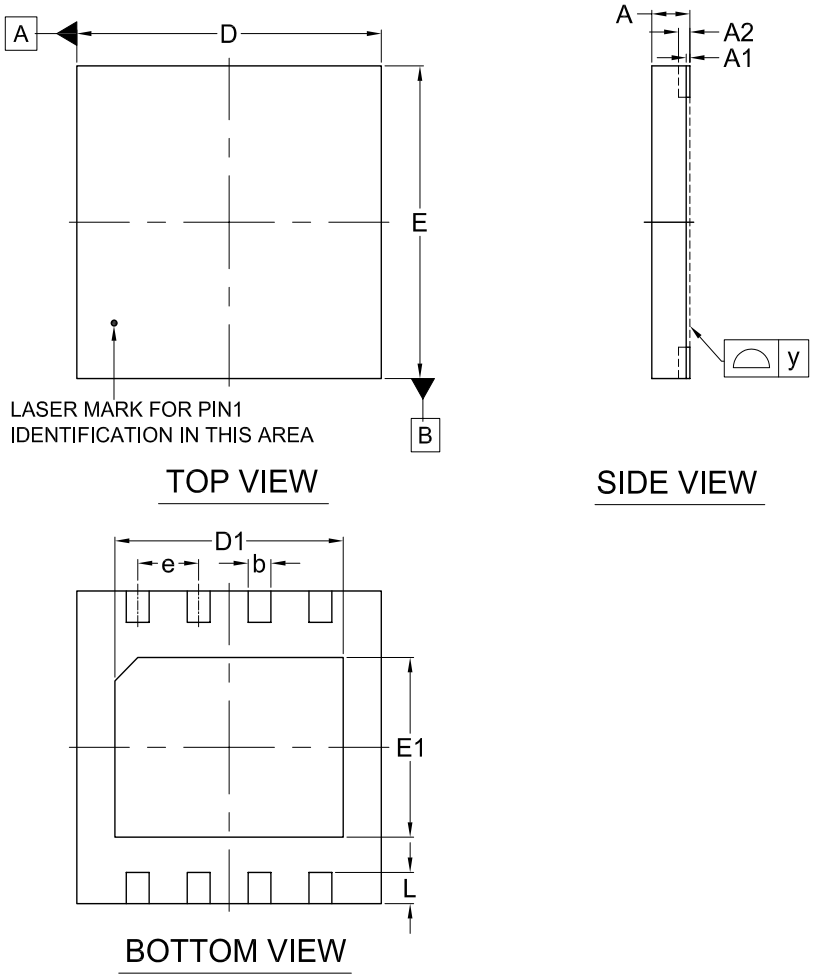

Note:

This package has an exposed metal pad underneath the package. It is recommended to leave the metal pad floating or to connect it to the same ground as the GND pin of the package. Do not connect the metal pad to any other voltage or signal line on the PCB. Avoid placing vias or traces underneath the metal pad. Connection of this metal pad to any other voltage or signal line can result in shorts and/or electrical malfunction of the device.

Dimensions (inch dimensions are derived from the original mm dimensions)

SYMBOL / UNIT		A	A1	A2	b	D	D1	E	E1	L	e	y
mm	Min.	0.40	---	---	0.25	3.90	2.90	3.90	2.20	0.35	---	0.00
	Nom.	0.45	0.02	0.15	0.30	4.00	3.00	4.00	2.30	0.40	0.80	---
	Max.	0.50	0.05	---	0.35	4.10	3.10	4.10	2.40	0.45	---	0.08
Inch	Min.	0.016	---	---	0.010	0.154	0.114	0.154	0.087	0.014	---	0.00
	Nom.	0.018	0.001	0.006	0.012	0.157	0.118	0.157	0.091	0.016	0.031	---
	Max.	0.020	0.002	---	0.014	0.161	0.122	0.161	0.094	0.018	---	0.003

20-3. 8-land USON (2x3mm)

Doc. Title: Package Outline for USON 8L (2x3x0.6MM, LEAD PITCH 0.5MM)

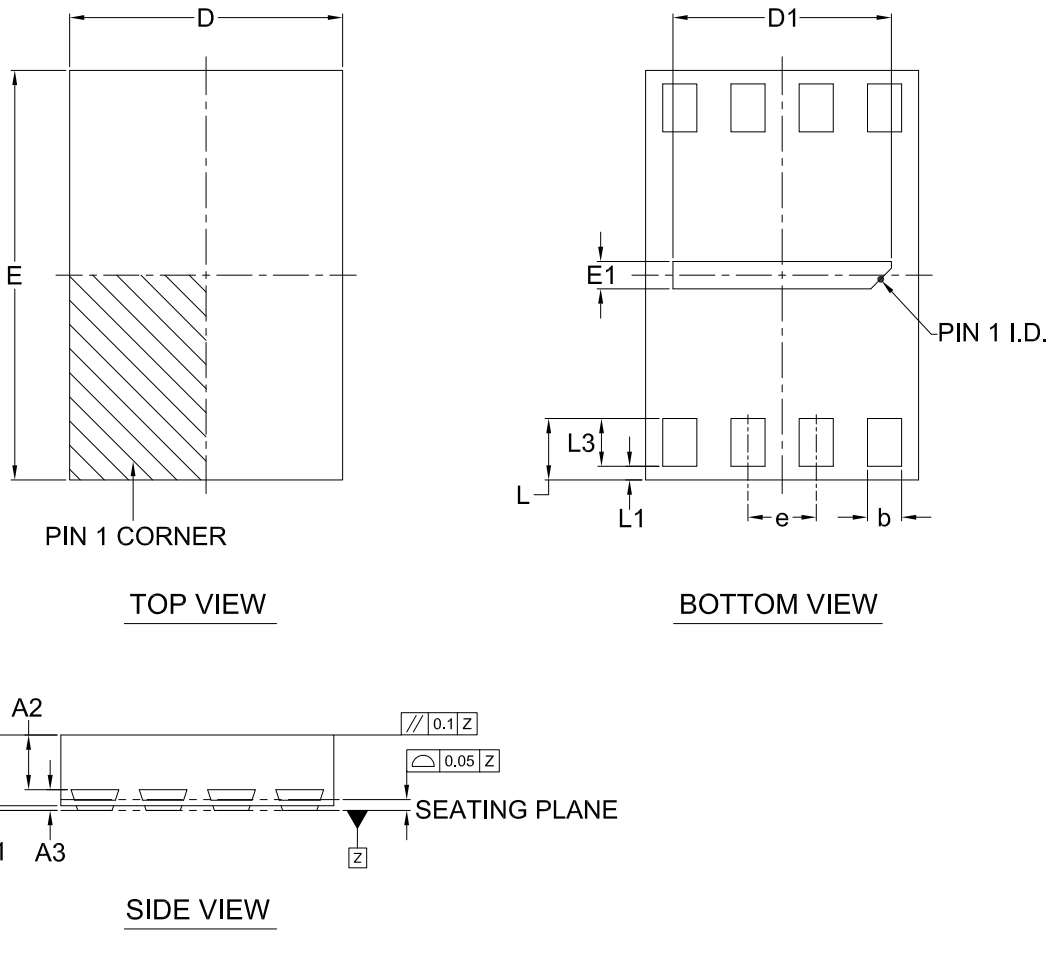

Note:

This package has an exposed metal pad underneath the package. It is recommended to leave the metal pad floating or to connect it to the same ground as the GND pin of the package. Do not connect the metal pad to any other voltage or signal line on the PCB. Avoid placing vias or traces underneath the metal pad. Connection of this metal pad to any other voltage or signal line can result in shorts and/or electrical malfunction of the device.

Dimensions (inch dimensions are derived from the original mm dimensions)

SYMBOL / UNIT		A	A1	A2	A3	b	D	D1	E	E1	e	L	L1	L3
mm	Min.	0.50	0	---	---	0.20	1.90	1.50	2.90	0.10	---	0.40	0	0.30
	Nom.	0.55	0.035	0.40	0.152	0.25	2.00	1.60	3.00	0.20	0.50	0.45	---	0.40
	Max.	0.60	0.05	0.425	---	0.30	2.10	1.70	3.10	0.30	---	0.50	0.15	0.50
Inch	Min.	0.020	0	---	---	0.008	0.075	0.059	0.114	0.004	---	0.016	0	0.012
	Nom.	0.022	0.0014	0.016	0.0060	0.010	0.079	0.063	0.118	0.008	0.020	0.018	---	0.016
	Max.	0.024	0.002	0.0167	---	0.012	0.083	0.067	0.122	0.012	---	0.020	0.006	0.020

20-4. 8-pin SOP (150mil)

Doe. Title: Package Outline for SOP 8L (150MIL)

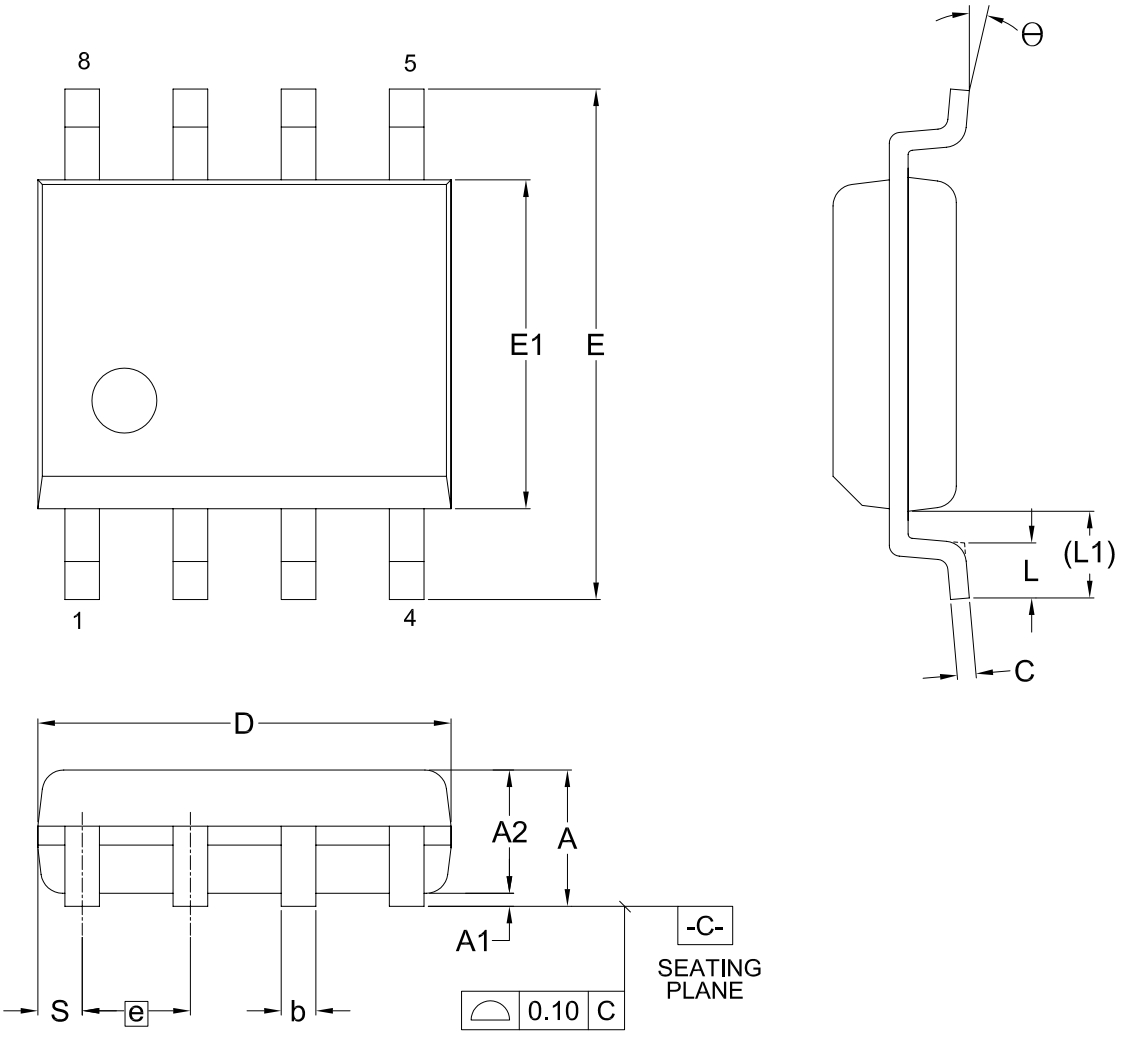

Dimensions (inch dimensions are derived from the original mm dimensions)

SYMBOL / UNIT		A	A1	A2	b	C	D	E	E1	e	L	L1	S	Θ
mm	Min.	—	0.10	1.35	0.36	0.15	4.77	5.80	3.80	—	0.46	0.85	0.41	0°
	Nom.	—	0.15	1.45	0.41	0.20	4.90	5.99	3.90	1.27	0.66	1.05	0.54	5°
	Max.	1.75	0.20	1.55	0.51	0.25	5.03	6.20	4.00	—	0.86	1.25	0.67	8°
Inch	Min.	—	0.004	0.053	0.014	0.006	0.188	0.228	0.150	—	0.018	0.033	0.016	0°
	Nom.	—	0.006	0.057	0.016	0.008	0.193	0.236	0.154	0.050	0.026	0.041	0.021	5°
	Max.	0.069	0.008	0.061	0.020	0.010	0.198	0.244	0.158	—	0.034	0.049	0.026	8°

Except for customized products which has been expressly identified in the applicable agreement, Macronix's products are designed, developed, and/or manufactured for ordinary business, industrial, personal, and/or household applications only, and not for use in any applications which may, directly or indirectly, cause death, personal injury, or severe property damages. In the event Macronix products are used in contradicted to their target usage above, the buyer shall take any and all actions to ensure said Macronix's product qualified for its actual use in accordance with the applicable laws and regulations; and Macronix as well as it's suppliers and/or distributors shall be released from any and all liability arisen therefrom.

Copyright© Macronix International Co., Ltd. 2022. All rights reserved, including the trademarks and tradename thereof, such as Macronix, MXIC, MXIC Logo, MX Logo, Integrated Solutions Provider, Nbit, Macronix NBit, HybridNVM, HybridFlash, HybridXFlash, XtraROM, KH Logo, BE-SONOS, KSMC, Kingtech, MXSMIO, RichBook, OctaBus, ArmorFlash, LybraFlash. The names and brands of third party referred thereto (if any) are for identification purposes only.

For the contact and order information, please visit Macronix's Web site at: http://www.macronix.com