MX25U8033E DATASHEET

Contents

FEATURES **5**
Table 1. Additional Feature Comparison 7
PIN CONFIGURATIONS **8**
PIN DESCRIPTION **8**
BLOCK DIAGRAM **9**
DATA PROTECTION **10**
Table 2. Protected Area Sizes 11
Table 3. 4K-bit Secured OTP Definition 11
Memory Organization **12**
Table 4. Memory Organization 12
DEVICE OPERATION **13**
Figure 1. Serial Modes Supported 13
HOLD FEATURE **14**
Figure 2. Hold Condition Operation 14
COMMAND DESCRIPTION **15**
Table 5. Command Set 15
(1) Write Enable (WREN) 17
(2) Write Disable (WRDI) 17
(3) Read Identification (RDID) 17
(4) Read Status Register (RDSR) 17
Program/ Erase Flow with Read Array Data 18
Program/ Erase Flow without Read Array Data (read P_FAIL/E_FAIL flag) 19
WRSR Flow 20
(5) Write Status Register (WRSR) 22
Table 7. Protection Modes 22
(6) Read Data Bytes (READ) 23
(7) Read Data Bytes at Higher Speed (FAST_READ) 23
(8) Dual Read Mode (DREAD) 23
(9) 2 x I/O Read Mode (2READ) 24
(10) 4 x I/O Read Mode (4READ) 24
(11) Performance Enhance Mode 25
(12) Sector Erase (SE) 25
(13) Block Erase (BE32K) 26
(14) Block Erase (BE) 26
(15) Chip Erase (CE) 26
(16) Page Program (PP) 27
(17) 4 x I/O Page Program (4PP) 27
(18) Deep Power-down (DP) 27

(19) Release from Deep Power-down (RDP), Read Electronic Signature (RES) 28
(20) Read Electronic Manufacturer ID & Device ID (REMS), (REMS2), (REMS4) 28
Table 8. ID Definitions 29
(21) Enter Secured OTP (ENSO) 29
(22) Exit Secured OTP (EXSO) 29
(23) Read Security Register (RDSCUR) 29
Table 9. Security Register Definition 30
(24) Write Security Register (WRSCUR) 30
(25) Write Protection Selection (WPSEL) 30
Figure 3. WPSEL Flow 31
(26) Single Block Lock/Unlock Protection (SBLK/SBULK) 32
Figure 4. Block Lock Flow 32
Figure 5. Block Unlock Flow 33
(27) Read Block Lock Status (RDBLOCK) 34
(28) Gang Block Lock/Unlock (GBLK/GBULK) 34
(29) Read SFDP Mode (RDSFDP) 35
Figure 6. Read Serial Flash Discoverable Parameter (RDSFDP) Sequence 35
Table 10. Signature and Parameter Identification Data Values 36
Table 11. Parameter Table (0): JEDEC Flash Parameter Tables 37
Table 12. Parameter Table (1): Macronix Flash Parameter Tables 39
POWER-ON STATE 41
ELECTRICAL SPECIFICATIONS 42
ABSOLUTE MAXIMUM RATINGS 42
Figure 7. Maximum Negative Overshoot Waveform 42
CAPACITANCE TA = 25°C, f = 1.0 MHz 42
Figure 8. Maximum Positive Overshoot Waveform 42
Figure 9. INPUT TEST WAVEFORMS AND MEASUREMENT LEVEL 43
Figure 10. OUTPUT LOADING 43
Table 13. DC CHARACTERISTICS (Temperature = -40°C to 85°C, VCC = 1.65V ~ 2.0V) 44
Table 14. AC CHARACTERISTICS (Temperature = -40°C to 85°C, VCC = 1.65V ~ 2.0V) 45
Timing Analysis 46
Figure 11. Serial Input Timing 46
Figure 12. Output Timing 46
Figure 13. Hold Timing 47
Figure 14. WP# Setup Timing and Hold Timing during WRSR when SRWD=1 47
Figure 15. Write Enable (WREN) Sequence (Command 06) 47
Figure 16. Write Disable (WRDI) Sequence (Command 04) 48
Figure 17. Read Identification (RDID) Sequence (Command 9F) 48
Figure 18. Read Status Register (RDSR) Sequence (Command 05) 48
Figure 19. Write Status Register (WRSR) Sequence (Command 01) 49

Figure 20. Read Data Bytes (READ) Sequence (Command 03) (50MHz) 49
Figure 21. Read at Higher Speed (FAST_READ) Sequence (Command 0B) 50
Figure 22. Dual Read Mode Sequence (Command 3B) 50
Figure 23. 2 x I/O Read Mode Sequence (Command BB) 51
Figure 24. 4 x I/O Read Mode Sequence (Command EB) 51
Figure 25. 2 x I/O Read Enhance Performance Mode Sequence (Command BB) 52
Figure 26. 4 x I/O Read Enhance Performance Mode Sequence (Command EB) 53
Figure 27. Page Program (PP) Sequence (Command 02) 54
Figure 28. 4 x I/O Page Program (4PP) Sequence (Command 38) 54
Figure 29. Sector Erase (SE) Sequence (Command 20) 55
Figure 30. Block Erase 32KB (BE32K) Sequence (Command 52) 55
Figure 31. Block Erase (BE) Sequence (Command D8) 55
Figure 32. Chip Erase (CE) Sequence (Command 60 or C7) 55
Figure 33. Deep Power-down (DP) Sequence (Command B9) 56
Figure 34. Release from Deep Power-down and Read Electronic Signature (RES) Sequence (Command AB) 56
Figure 35. Release from Deep Power-down (RDP) Sequence (Command AB) 57
Figure 36. Read Electronic Manufacturer & Device ID (REMS) Sequence (Command 90/EF/DF) 57
Figure 37. Read Security Register (RDSCUR) Sequence (Command 2B) 58
Figure 38. Write Security Register (WRSCUR) Sequence (Command 2F) 58
Figure 39. Power-up Timing 59
Table 15. Power-Up Timing and VWI Threshold 59
INITIAL DELIVERY STATE 59
OPERATING CONDITIONS 60
Figure 40. AC Timing at Device Power-Up 60
Figure 41. Power-Down Sequence 61
ERASE AND PROGRAMMING PERFORMANCE 62
LATCH-UP CHARACTERISTICS 62
ORDERING INFORMATION 63
PART NAME DESCRIPTION 64
PACKAGE INFORMATION 65
REVISION HISTORY 69

FEATURES

GENERAL

- Single Power Supply Operation
  - 1.65 to 2.0 volt for read, erase, and program operations
- Serial Peripheral Interface compatible -- Mode 0 and Mode 3
- 8M: 8,388,608 x 1 bit structure or 4,194,304 x 2 bits (two I/O read mode) structure or 2,097,152 x 4 bits (four I/O read mode) structure
- 256 Equal Sectors with 4K byte each
  - Any Sector can be erased individually
- 32 Equal Blocks with 32K byte each
  - Any Block can be erased individually
- 16 Equal Blocks with 64K byte each
  - Any Block can be erased individually
- Program Capability
  - Byte base
  - Page base (256 bytes)
- Latch-up protected to 100mA from -1V to Vcc +1V

PERFORMANCE

- High Performance
  - Fast read
    - 1 I/O: 80MHz with 8 dummy cycles
    - 2 I/O: 80MHz with 4 dummy cycles, equivalent to 160MHz
    - 4 I/O: 70MHz with 6 dummy cycles, equivalent to 280MHz;
  - Fast program time: 1.2ms(typ.) and 3.0ms(max.)/page (256-byte per page)
  - Byte program time: 15us (typ.)
  - Fast erase time
    - 60ms(typ.) and 200ms(max.)/sector (4K-byte per sector)
    - 250ms(typ.) and 1000ms(max.)/block (32K-byte per block)
    - 500ms(typ.) and 2000ms(max.)/block (64K-byte per block)
    - 5.0s(typ.) and 10s(max.)/chip
- Low Power Consumption
  - Low active read current: 12mA(max.) at 80MHz, 7mA(max.) at 33MHz
  - Low active erase/programming current: 25mA (max.)
  - Low standby current: 25uA (typ.)/35uA (max.)
- Low Deep Power Down current: 8uA(max.)
- Typical 100,000 erase/program cycles
- 20 years data retention

SOFTWARE FEATURES

- Input Data Format
  - 1-byte Command code
- Advanced Security Features
  - Block lock protection

  The BP0-BP3 status bit defines the size of the area to be software protection against program and erase instructions
  - Additional 4K-bit secured OTP for unique identifier
- Auto Erase and Auto Program Algorithm
  - Automatically erases and verifies data at selected sector or block
  - Automatically programs and verifies data at selected page by an internal algorithm that automatically times the program pulse widths (Any page to be programed should have page in the erased state first).

- Status Register Feature
- Electronic Identification
  - JEDEC 1-byte manufacturer ID and 2-byte device ID
  - RES command for 1-byte Device ID
  - REMS, REMS2 and REMS4 commands for 1-byte manufacturer ID and 1-byte device ID
- Support Serial Flash Discoverable Parameter (SFDP) mode

HARDWARE FEATURES

- SCLK Input
  - Serial clock input
- SI/SIO0
  - Serial Data Input or Serial Data Input/Output for 2 x I/O read mode and 4 x I/O read mode
- SO/SIO1
  - Serial Data Output or Serial Data Input/Output for 2 x I/O read mode and 4 x I/O read mode
- WP#/SIO2
  - Hardware write protection or serial data Input/Output for 4 x I/O read mode
- HOLD#/SIO3
  - HOLD feature, to pause the device without deselecting the device or serial data Input/Output for 4 x I/O read mode
- PACKAGE
  - 8-land USON (4x4mm)
  - 8-pin SOP (150mil)
  - 8-pin SOP (200mil)
  - 8-land WSON (6x5mm)
  - **All devices are RoHS Compliant**

GENERAL DESCRIPTION

The MX25U8033E is 8,388,608 bit serial Flash memory, which is configured as 1,048,576 x 8 internally. The MX25U8033E features a serial peripheral interface and software protocol allowing operation on a simple 4-wire bus while it is in single I/O mode. The four bus signals are a clock input (SCLK), a serial data input (SI), a serial data output (SO) and a chip select (CS#). Serial access to the device is enabled by CS# input.

When it is in two I/O read mode, the SI pin and SO pin become SIO0 pin and SIO1 pin for address/dummy bits input and data output. When it is in four I/O read mode, the SI pin, SO pin, WP# pin and HOLD# pin become SIO0 pin, SIO1 pin, SIO2 pin and SIO3 pin for address/dummy bits input and data output.

The MX25U8033E MXSMIO® (Serial Multi I/O) provides sequential read operation on the whole chip.

After program/erase command is issued, auto program/erase algorithms which program/erase and verify the specified page or sector/block locations will be executed. Program command is executed on byte basis, or page (256 bytes) basis. Erase command is executed on 4K-byte sector, 32K-byte block, or 64K-byte block, or whole chip basis.

To provide user with ease of interface, a status register is included to indicate the status of the chip. The status read command can be issued to detect completion status of a program or erase operation via the WIP bit.
Advanced security features enhance the protection and security functions, please see security features section for more details.

When the device is not in operation and CS# is high, it is put in standby mode and typically draws 25uA DC current.

The MX25U8033E utilizes Macronix's proprietary memory cell, which reliably stores memory contents even after 100,000 program and erase cycles.

Table 1. Additional Feature Comparison

Part Name \ Additional Features	Protection and Security			Read Performance		Identifier		
	Flexible Block Protection (BP0-BP3)	Individual Protect	4K-bit secured OTP	2 I/O Read	4 I/O Read	RES (Command: AB hex)	REMS/ REMS2/ REMS4 (Command: 90/EF/DF hex)	RDID (Command: 9F hex)
MX25U8033E	V	V	V	V	V	34 (hex)	C2 34 (hex) (if ADD=0)	C2 25 34 (hex)

PIN CONFIGURATIONS

8-LAND USON (4x4mm)

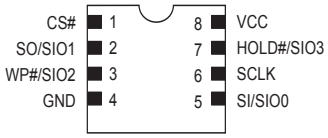

8-PIN SOP (150mil/200mil)

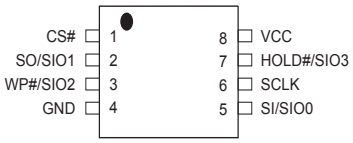

8-LAND WSON (6x5mm)

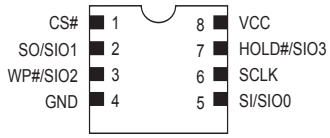

PIN DESCRIPTION

SYMBOL	DESCRIPTION
CS#	Chip Select
SI/SIO0	Serial Data Input (for 1 x I/O)/ Serial Data Input & Output (for 2xI/O or 4xI/O read mode)
SO/SIO1	Serial Data Output (for 1 x I/O)/ Serial Data Input & Output (for 2xI/O or 4xI/O read mode)
SCLK	Clock Input
WP#/SIO2	Hardware write protection: connect to GND or Serial Data Input & Output (for 4xI/O read mode)
HOLD#/SIO3	To pause the device without deselecting the device or Serial Data Input & Output (for 4xI/O read mode)
VCC	+ 1.8V Power Supply
GND	Ground

BLOCK DIAGRAM

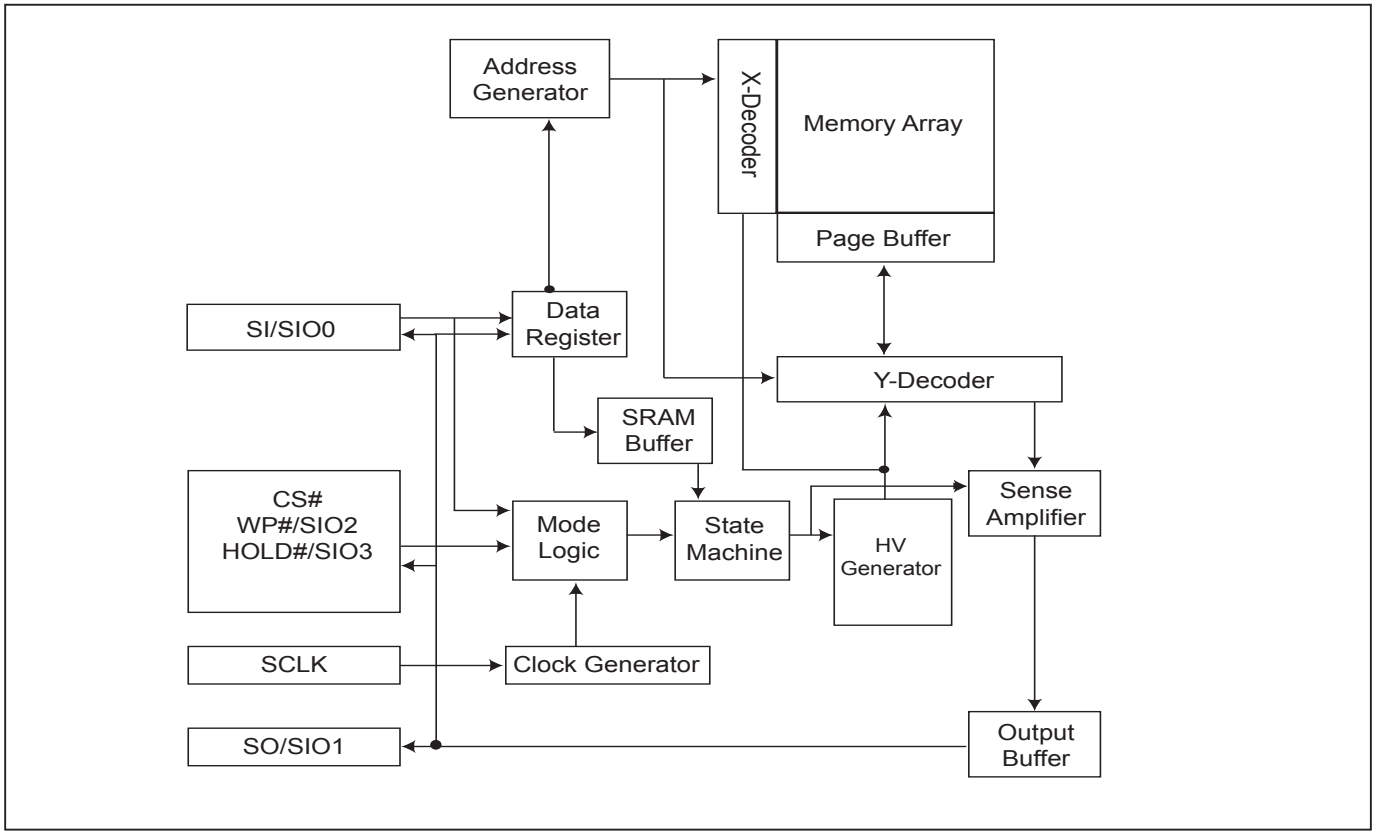

DATA PROTECTION

During power transition, there may be some false system level signals which result in inadvertent erasure or programming. The device is designed to protect itself from these accidental write cycles.

The state machine will be reset as standby mode automatically during power up. In addition, the control register architecture of the device constrains that the memory contents can only be changed after specific command sequences have completed successfully.

In the following, there are several features to protect the system from the accidental write cycles during VCC power-up and power-down or from system noise.

- Valid command length checking: The command length will be checked whether it is at byte base and completed on byte boundary.

- Write Enable (WREN) command: WREN command is required to set the Write Enable Latch bit (WEL) before issuing other commands to change data. The WEL bit will return to resetting stage while the following conditions occurred:
  - Power-up
  - Completion of Write Disable (WRDI) command
  - Completion of Write Status Register (WRSR) command
  - Completion of Page Program (PP) command
  - Completion of Quad page program (4PP) command
  - Completion of Sector Erase (SE) command
  - Completion of Block Erase 32KB (BE32K) command
  - Completion of Block Erase (BE) command
  - Completion of Chip Erase (CE) command
  - Completion of Write Protection Select (WPSEL) command
  - Completion of Write Security Register (WRSCUR) command
  - Completion of Single Block Lock/Unlock (SBLK/SBULK) command
  - Completion of Gang Block Lock/Unlock (GBLK/GBULK) command

- Deep Power Down Mode: By entering deep power down mode, the flash device also is under protected from writing all commands except Release from deep power down mode command (RDP) and Read Electronic Signature command (RES).

- Advanced Security Features: there are some protection and security features which protect content from inadvertent write and hostile access.

I. Block lock protection

- The Software Protected Mode (SPM) use (BP3, BP2, BP1, BP0) bits to allow part of memory to be protected as read only. The protected area definition is shown as table of "*Protected Area Sizes*", the protected areas are more flexible which may protect various area by setting value of BP0-BP3 bits.
  Please refer to table of "*Protected Area Sizes*".
- The Hardware Protected Mode (HPM) use WP#/SIO2 to protect the (BP3, BP2, BP1, BP0) bits and SRWD bit. If the system goes into four I/O read mode, the feature of HPM will be disabled.

Table 2. Protected Area Sizes

Status Bit				Protect Level
BP3	BP2	BP1	BP0	8Mb
0	0	0	0	0 (none)
0	0	0	1	1 (1block, protected block 15th)
0	0	1	0	2 (2blocks, protected block 14th~15th)
0	0	1	1	3 (4blocks, protected block 12nd~15th)
0	1	0	0	4 (8blocks, protected block 8th~15th)
0	1	0	1	5 (16blocks, protected all)
0	1	1	0	6 (16blocks, protected all)
0	1	1	1	7 (16blocks, protected all)
1	0	0	0	8 (16blocks, protected all)
1	0	0	1	9 (16blocks, protected all)
1	0	1	0	10 (16blocks, protected all)
1	0	1	1	11 (8blocks, protected block 0th~7th)
1	1	0	0	12 (12blocks, protected block 0th~11st)
1	1	0	1	13 (14blocks, protected block 0th~13rd)
1	1	1	0	14 (15blocks, protected block 0th~14th)
1	1	1	1	15 (16blocks, protected all)

II. **Additional 4K-bit secured OTP** for unique identifier: to provide 4K-bit One-Time Program area for setting device unique serial number - Which may be set by factory or system maker. Please refer to Table 3. 4K-bit Secured OTP Definition.

- Security register bit 0 indicates whether the chip is locked by factory or not.
- To program the 4K-bit secured OTP by entering 4K-bit secured OTP mode (with ENSO command), and going through normal program procedure, and then exiting 4K-bit secured OTP mode by writing EXSO command.
- Customer may lock-down the customer lockable secured OTP by writing WRSCUR(write security register) command to set customer lock-down bit1 as "1". Please refer to table of "Security Register Definition" for security register bit definition and table of "4K-bit Secured OTP Definition" for address range definition.

Note:
Once lock-down whatever by factory or customer, it cannot be changed any more. While in 4K-bit Secured OTP mode, array access is not allowed.

Table 3. 4K-bit Secured OTP Definition

Address range	Size	Standard Factory Lock	Customer Lock
xxx000~xxx00F	128-bit	ESN (electrical serial number)	Determined by customer
xxx010~xxx1FF	3968-bit	N/A	

Memory Organization

Table 4. Memory Organization

Block (64KB)	Block (32KB)	Sector (4KB)	Address Range		
15	31 | 30	255	0FF000h	0FFFFFh	▲ Individual Sector Lock/Unlock ▼
		:	:	:	
		240	0F0000h	0F0FFFh	
14	29 | 28	239	0EF000h	0EFFFFh	▲ Individual Block Lock/Unlock
		:	:	:	
		224	0E0000h	0E0FFFh	
13	27 | 26	223	0DF000h	0DFFFFh	
		:	:	:	
		208	0D0000h	0D0FFFh	
12	25 | 24	207	0CF000h	0CFFFFh	
		:	:	:	
		192	0C0000h	0C0FFFh	
11	23 | 22	191	0BF000h	0BFFFFh	
		:	:	:	
		176	0B0000h	0B0FFFh	
10	21 | 20	175	0AF000h	0AFFFFh	
		:	:	:	
		160	0A0000h	0A0FFFh	
9	19 | 18	159	09F000h	09FFFFh	
		:	:	:	
		144	090000h	090FFFh	
8	17 | 16	143	08F000h	08FFFFh	
		:	:	:	
		128	080000h	080FFFh	
7	15 | 14	127	07F000h	07FFFFh	
		:	:	:	
		112	070000h	070FFFh	
6	13 | 12	111	06F000h	06FFFFh	
		:	:	:	
		96	060000h	060FFFh	
5	11 | 10	95	05F000h	05FFFFh	
		:	:	:	
		80	050000h	050FFFh	
4	9 | 8	79	04F000h	04FFFFh	
		:	:	:	
		64	040000h	040FFFh	
3	7 | 6	63	03F000h	03FFFFh	
		:	:	:	
		48	030000h	030FFFh	
2	5 | 4	47	02F000h	02FFFFh	
		:	:	:	
		32	020000h	020FFFh	
1	3 | 2	31	01F000h	01FFFFh	
		:	:	:	
		16	010000h	010FFFh	▼
0	1 | 0	15	00F000h	00FFFFh	▲ Individual Sector Lock/Unlock
		:	:	:	
		2	002000h	002FFFh	
		1	001000h	001FFFh	
		0	000000h	000FFFh	▼

DEVICE OPERATION

1. Before a command is issued, status register should be checked to ensure device is ready for the intended operation.

2. When incorrect command is inputted to this device, it enters standby mode and remains in the standby mode until next CS# falling edge. In standby mode, SO pin of the device is High-Z.

3. When correct command is inputted to this device, it becomes active mode and remains in the active mode until next CS# rising edge.

4. Input data is latched on the rising edge of Serial Clock (SCLK) and data is shifted out on the falling edge of SCLK. The difference of Serial mode 0 and mode 3 is shown as *Figure 1. "Serial Modes Supported"*.

5. For the following instructions: RDID, RDSR, RDSCUR, READ, FAST_READ, 2READ, DREAD, 4READ, RES, REMS, REMS2, REMS4 and RDSFDP, the shifted-in instruction sequence is followed by a data-out sequence. After any bit of data being shifted out, the CS# can be high. For the following instructions: WREN, WRDI, WRSR, SE, BE32K, BE, CE, PP, 4PP, RDP, DP, WPSEL, SBLK, SBULK, GBLK, GBULK,ENSO, EXSO, and WRSCUR, the CS# must go high exactly at the byte boundary; otherwise, the instruction will be rejected and not executed.

6. While a Write Status Register, Program or Erase operation is in progress, to the memory array is neglected and while not affect the current operation of WRSCUR, WPSEL Write Status Register, Program and Erase.

Figure 1. Serial Modes Supported

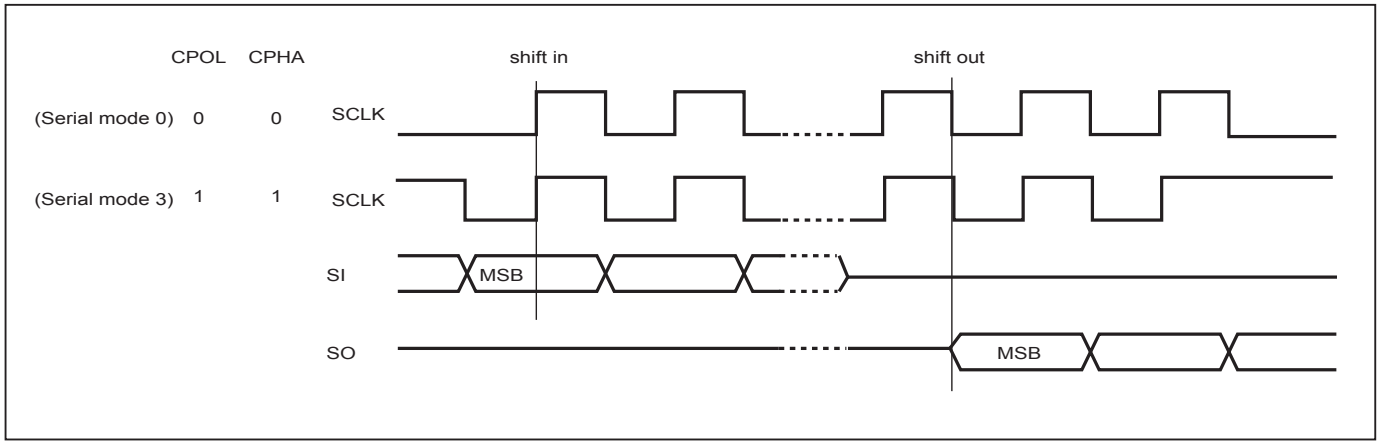

Note:
CPOL indicates clock polarity of Serial master, CPOL=1 for SCLK high while idle, CPOL=0 for SCLK low while not transmitting. CPHA indicates clock phase. The combination of CPOL bit and CPHA bit decides which Serial mode is supported.

HOLD FEATURE

HOLD# pin signal goes low to hold any serial communications with the device. The HOLD feature will not stop the operation of write status register, programming, or erasing in progress.

The operation of HOLD requires Chip Select (CS#) keeping low and starts on falling edge of HOLD# pin signal while Serial Clock (SCLK) signal is being low (if Serial Clock signal is not being low, HOLD operation will not start until Serial Clock signal being low). The HOLD condition ends on the rising edge of HOLD# pin signal while Serial Clock (SCLK) signal is being low (if Serial Clock signal is not being low, HOLD operation will not end until Serial Clock being low), see *Figure 2*.

Figure 2. Hold Condition Operation

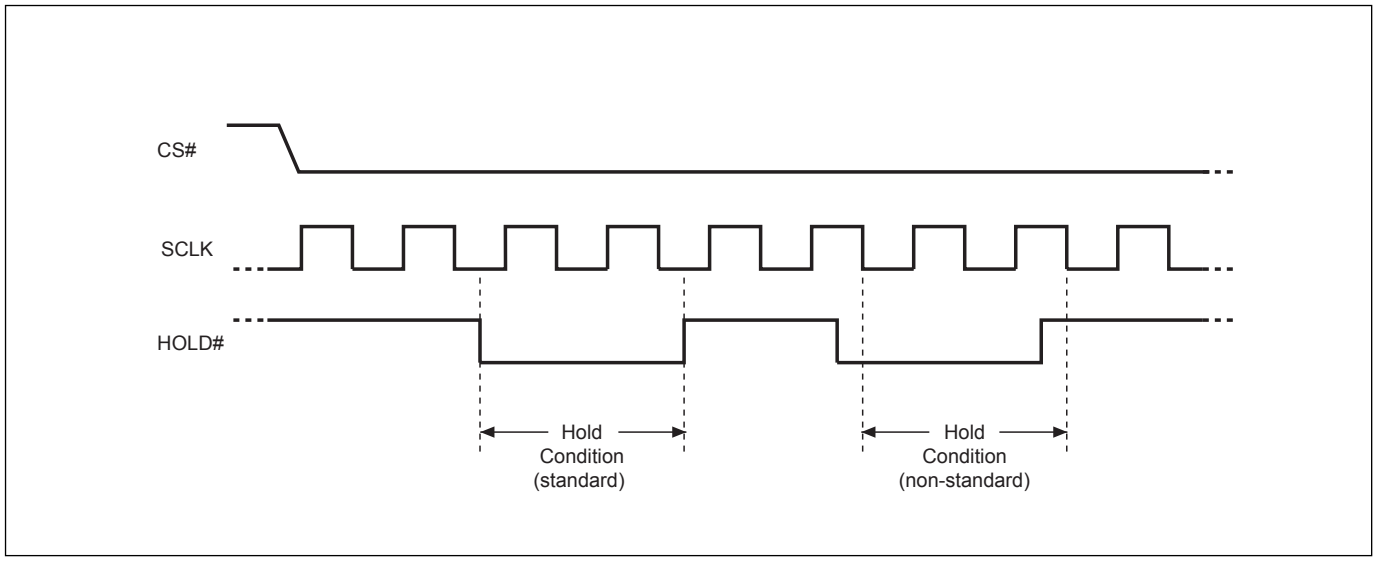

The Serial Data Output (SO) is high impedance, both Serial Data Input (SI) and Serial Clock (SCLK) are don't care during the HOLD operation. If Chip Select (CS#) drives high during HOLD operation, it will reset the internal logic of the device. To re-start communication with chip, the HOLD# must be at high and CS# must be at low.

COMMAND DESCRIPTION

Table 5. Command Set

Read Commands

I/O	1	1	1	2	2	4
Command (byte)	READ (normal read)	FAST READ (fast read data)	RDSFDP (Read SFDP)	2READ (2 x I/O read command)	DREAD (1I / 2O read command)	4READ (4 x I/O read command)
Clock rate (MHz)	50	80	80	80	80	70
1st byte	03 (hex)	0B (hex)	5A (hex)	BB (hex)	3B (hex)	EB (hex)
2nd byte	AD1	AD1	AD1	AD1	AD1	AD1
3rd byte	AD2	AD2	AD2	AD2	AD2	AD2
4th byte	AD3	AD3	AD3	AD3	AD3	AD3
5th byte		Dummy	Dummy	Dummy	Dummy	Dummy
Action	n bytes read out until CS# goes high	n bytes read out until CS# goes high	Read SFDP mode	n bytes read out by 2 x I/O until CS# goes high		n bytes read out by 4 x I/O until CS# goes high

Program/Erase Commands

Command (byte)	WREN (write enable)	WRDI (write disable)	RDSR (read status register)	WRSR (write status register)	SE (sector erase)	BE 32K (block erase 32KB)	BE (block erase 64KB)
1st byte	06 (hex)	04 (hex)	05 (hex)	01 (hex)	20 (hex)	52 (hex)	D8 (hex)
2nd byte				Values	AD1	AD1	AD1
3rd byte					AD2	AD2	AD2
4th byte					AD3	AD3	AD3
Action	sets the (WEL) write enable latch bit	resets the (WEL) write enable latch bit	to read out the values of the status register	to write new values of the status register	to erase the selected sector	to erase the selected 32KB block	to erase the selected block

Command (byte)	CE (chip erase)	PP (page program)	4PP (Quad page program)	DP (Deep power down)	RDP (Release from deep power down)
1st byte	60 or C7 (hex)	02 (hex)	38 (hex)	B9 (hex)	AB (hex)
2nd byte		AD1	AD1		
3rd byte		AD2	AD2		
4th byte		AD3	AD3		
Action	to erase whole chip	to program the selected page	quad input to program the selected page	enters deep power down mode	release from deep power down mode

Security/ID/Mode Setting/Reset Commands

Command (byte)	RDID (read identific-ation)	RES (read electronic ID)	REMS (read electronic manufacturer & device ID)	REMS2 (read ID for 2x I/O mode)	REMS4 (read ID for 4x I/O mode)	ENSO (enter secured OTP)	EXSO (exit secured OTP)
1st byte	9F (hex)	AB (hex)	90 (hex)	EF (hex)	DF (hex)	B1 (hex)	C1 (hex)
2nd byte		x	x	X	x		
3rd byte		x	x	X	x		
4th byte		x	ADD	ADD	ADD		
Action	outputs JEDEC ID: 1-byte Manufacturer ID & 2-byte Device ID	to read out 1-byte Device ID	output the Manufacturer ID & Device ID	output the Manufacturer ID & Device ID	output the Manufacturer ID & Device ID	to enter the 4K-bit secured OTP mode	to exit the 4K-bit secured OTP mode

Command (byte)	RDSCUR (read security register)	WRSCUR (write security register)	SBLK (single block lock	SBULK (single block unlock)	RDBLOCK (block protect read)	GBLK (gang block lock)	GBULK (gang block unlock)
1st byte	2B (hex)	2F (hex)	36 (hex)	39 (hex)	3C (hex)	7E (hex)	98 (hex)
2nd byte			AD1	AD1	AD1		
3rd byte			AD2	AD2	AD2		
4th byte			AD3	AD3	AD3		
Action	to read value of security register	to set the lock-down bit as "1" (once lock-down, cannot be update)	individual block (64K-byte) or sector (4K-byte) write protect	individual block (64K-byte) or sector (4K-byte) unprotect	read individual block or sector write protect status	whole chip write protect	whole chip unprotect

Command (byte)	WPSEL (Write Protect Selection)
1st byte	68 (hex)
2nd byte	
3rd byte	
4th byte	
Action	to enter and enable individal block protect mode

Note 1: ADD=00H will output the manufacturer ID first and ADD=01H will output device ID first.
2: It is not recommended to adopt any other code not in the command definition table, which will potentially enter the hidden mode.

(1) Write Enable (WREN)

The Write Enable (WREN) instruction is to set Write Enable Latch (WEL) bit. For those instructions like PP, 4PP, SE, BE32K, BE, CE, WPSEL, WRSCUR, SBLK, SBULK, GBLK, GBULK and WRSR, which are intended to change the device content WEL bit should be set every time after the WREN instruction setting the WEL bit.

The sequence of issuing WREN instruction is: CS# goes low→sending WREN instruction code→ CS# goes high. (Please refer to *Figure 15*)

(2) Write Disable (WRDI)

The Write Disable (WRDI) instruction is to reset Write Enable Latch (WEL) bit.

The sequence of issuing WRDI instruction is: CS# goes low→sending WRDI instruction code→CS# goes high. (Please refer to *Figure 16*)

The WEL bit will be reset while the following conditions occurred:
- Power-up
- Completion of Write Disable (WRDI) instruction
- Completion of Write Status Register (WRSR) instruction
- Completion of Page Program (PP) instruction
- Completion of Quad page program (4PP) instruction
- Completion of Sector Erase (SE) instruction
- Completion of Block Erase 32KB (BE32K) instruction
- Completion of Block Erase (BE) instruction
- Completion of Chip Erase (CE) instruction
- Completion of Write Protection Select (WPSEL) instruction
- Completion of Write Security Register (WRSCUR) instruction
- Completion of Single Block Lock/Unlock (SBLK/SBULK) instruction
- Completion of Gang Block Lock/Unlock (GBLK/GBULK) instruction

(3) Read Identification (RDID)

The RDID instruction is to read the manufacturer ID of 1-byte and followed by Device ID of 2-byte. The Macronix Manufacturer ID is C2(hex), the memory type ID is 25(hex) as the first-byte device ID, and the individual device ID of second-byte ID are listed as table of "ID Definitions". (Please refer to *Table 8*)

The sequence of issuing RDID instruction is: CS# goes low→ sending RDID instruction code→24-bits ID data out on SO→ to end RDID operation can drive CS# to high at any time during data out. (Please refer to *Figure 17*)

While Program/Erase operation is in progress, it will not decode the RDID instruction, therefore there's no effect on the cycle of program/erase operation which is currently in progress. When CS# goes high, the device is at standby stage.

(4) Read Status Register (RDSR)

The RDSR instruction is for reading Status Register Bits. The Read Status Register can be read at any time (even in program/erase/WPSEL/WRSCUR/write status register condition). It is recommended to check the Write in Progress (WIP) bit before sending a new instruction when a program, erase, or write status register operation is in progress.

The sequence of issuing RDSR instruction is: CS# goes low→ sending RDSR instruction code→ Status Register data out on SO. (Please refer to *Figure 18*)

For user to check if Program/Erase operation is finished or not, RDSR instruction flow are shown as follows:

Program/ Erase Flow with Read Array Data

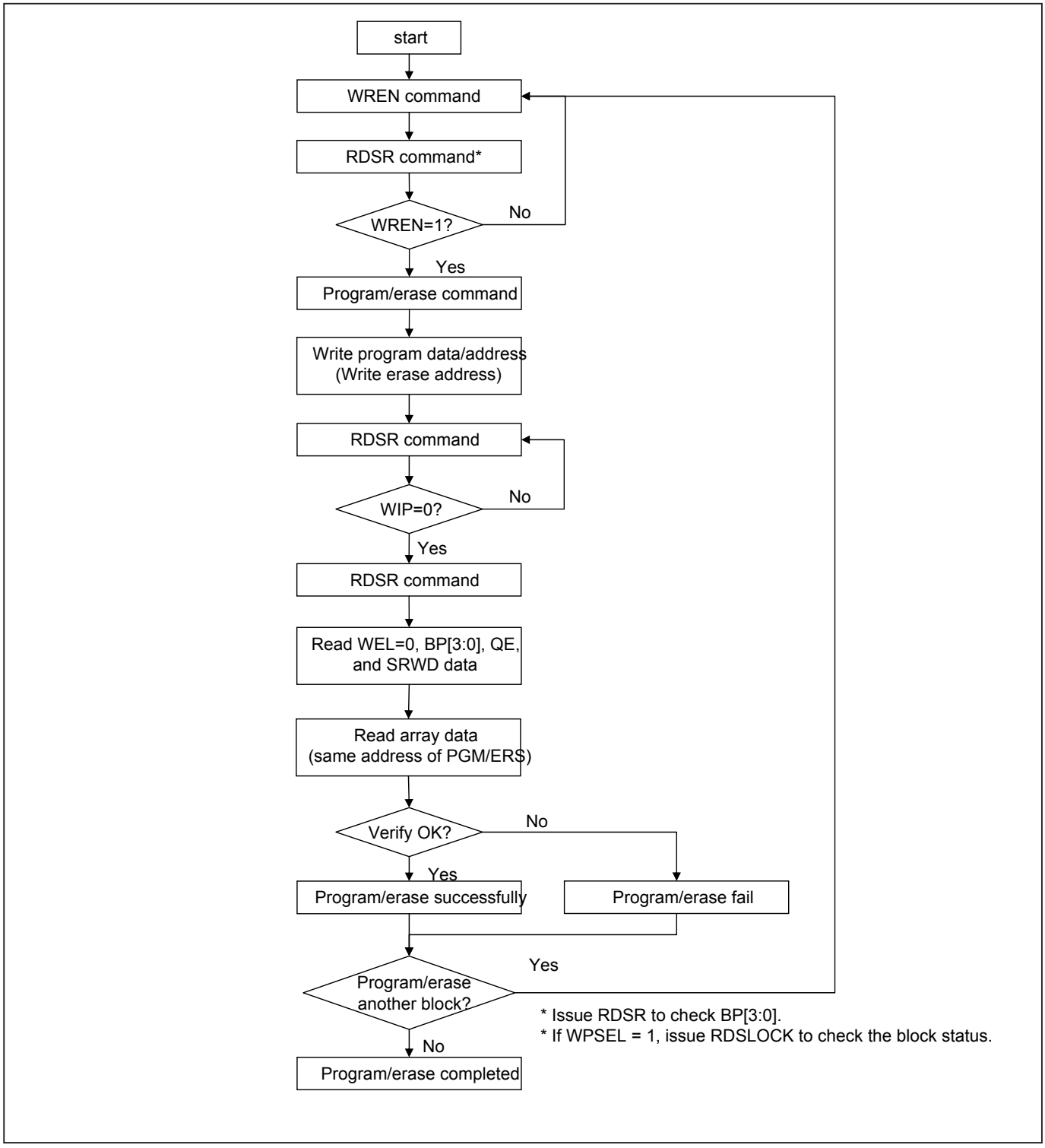

Program/ Erase Flow without Read Array Data (read P_FAIL/E_FAIL flag)

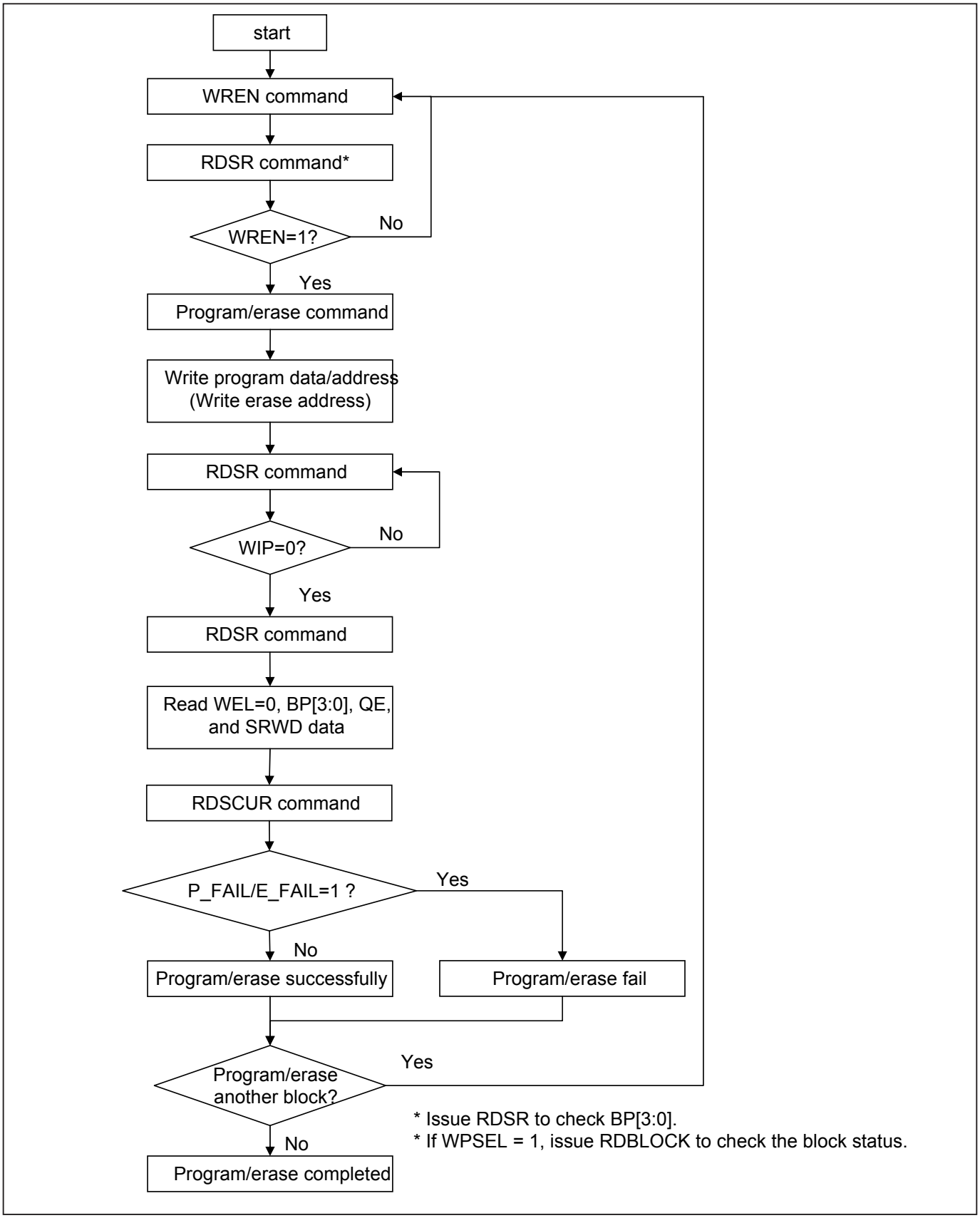

WRSR Flow

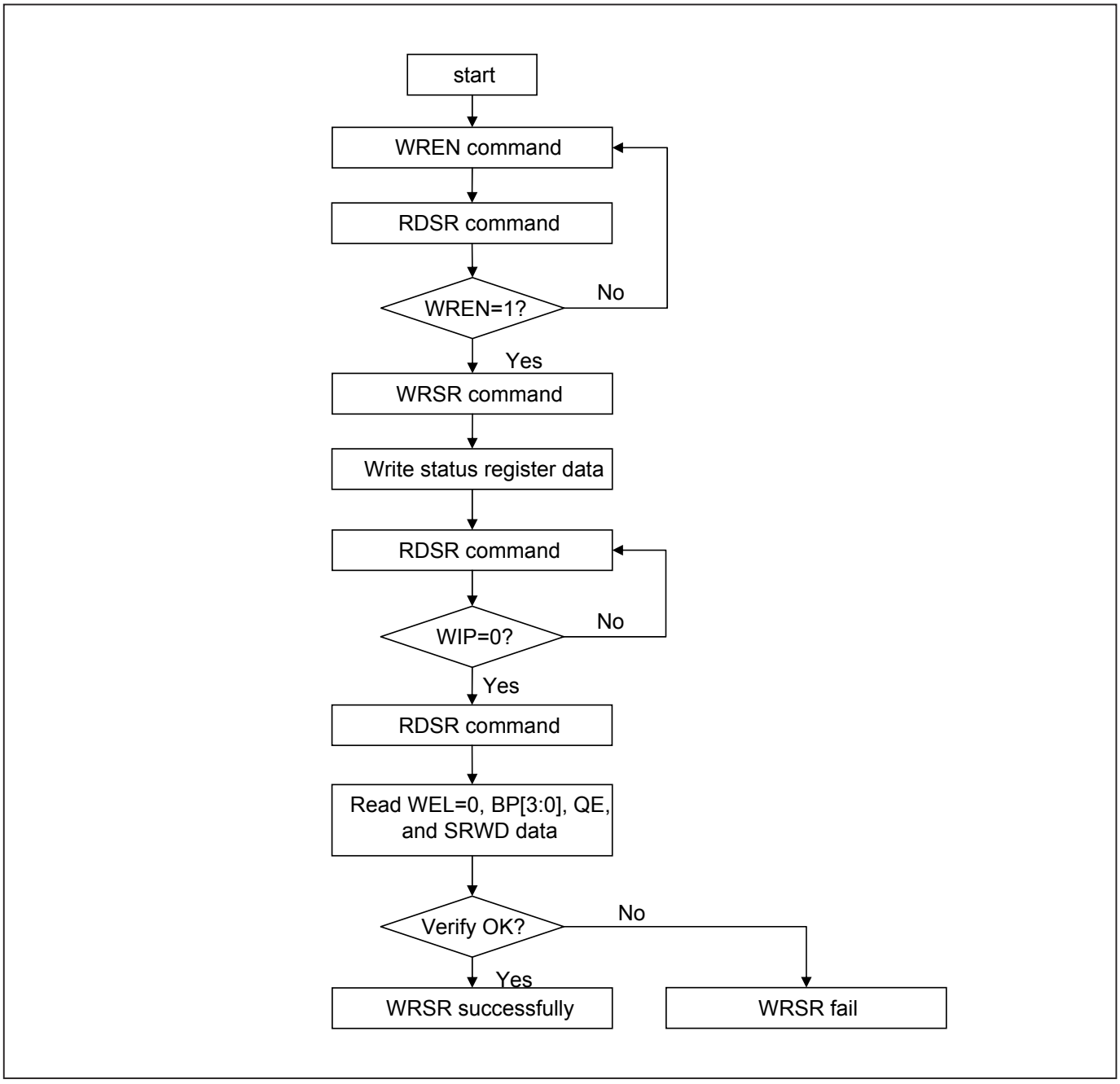
start
WREN command
RDSR command
WREN=1?
No
Yes
WRSR command
Write status register data
RDSR command
WIP=0?
No
Yes
RDSR command
Read WEL=0, BP[3:0], QE, and SRWD data
Verify OK?
No
Yes
WRSR successfully
WRSR fail

The definition of the status register bits is as below:

WIP bit. The Write in Progress (WIP) bit, a volatile bit, indicates whether the device is busy in program/erase/write status register progress. When WIP bit sets to 1, which means the device is busy in program/erase/write status register progress. When WIP bit sets to 0, which means the device is not in progress of program/erase/write status register cycle.

WEL bit. The Write Enable Latch (WEL) bit, a volatile bit, indicates whether the device is set to internal write enable latch. When WEL bit sets to 1, which means the internal write enable latch is set, the device can accept program/erase/write status register instruction. When WEL bit sets to 0, which means no internal write enable latch; the device will not accept program/erase/write status register instruction. The program/erase command will be ignored if it is applied to a protected memory area. To ensure both WIP bit & WEL bit are both set to 0 and available for next program/erase/operations, WIP bit needs to be confirm to be 0 before polling WEL bit. After WIP bit confirmed, WEL bit needs to be confirm to be 0.

BP3, BP2, BP1, BP0 bits. The Block Protect (BP3, BP2, BP1, BP0) bits, non-volatile bits, indicate the protected area (as defined in table 2) of the device to against the program/erase instruction without hardware protection mode being set. To write the Block Protect (BP3, BP2, BP1, BP0) bits requires the Write Status Register (WRSR) instruction to be executed. Those bits define the protected area of the memory to against Page Program (PP), Sector Erase (SE), Block Erase 32KB (BE32K), Block Erase (BE) and Chip Erase (CE) instructions (only if Block Protect bits (BP3:BP0) set to 0, the CE instruction can be executed). The BP3, BP2, BP1, BP0 bits are "0" as default. Which is un-protected.

QE bit. The Quad Enable (QE) bit, non-volatile bit, while it is "0" (factory default), it performs non-Quad and WP# is enable. While QE is "1", it performs Quad I/O mode and WP# is disabled. In the other word, if the system goes into four I/O mode (QE=1), the features of HPM and HOLD will be disabled.

SRWD bit. The Status Register Write Disable (SRWD) bit, non-volatile bit, is operated together with Write Protection (WP#/SIO2) pin for providing hardware protection mode. The hardware protection mode requires SRWD sets to 1 and WP#/SIO2 pin signal is low stage. In the hardware protection mode, the Write Status Register (WRSR) instruction is no longer accepted for execution and the SRWD bit and Block Protect bits (BP3, BP2, BP1, BP0) are read only. The SRWD bit defaults to be "0".

Table 6. Status Register

bit7	bit6	bit5	bit4	bit3	bit2	bit1	bit0
SRWD (status register write protect)	QE (Quad Enable)	BP3 (level of protected block)	BP2 (level of protected block)	BP1 (level of protected block)	BP0 (level of protected block)	WEL (write enable latch)	WIP (write in progress bit)
1=status register write disable	1=Quad Enable 0=not Quad Enable	(note 1)	(note 1)	(note 1)	(note 1)	1=write enable 0=not write enable	1=write operation 0=not in write operation
Non-volatile bit	Non-volatile bit	Non-volatile bit	Non-volatile bit	Non-volatile bit	Non-volatile bit	volatile bit	volatile bit

Note 1: see the *Table 2* "Protected Area Size".

(5) Write Status Register (WRSR)

The WRSR instruction is for changing the values of Status Register Bits. Before sending WRSR instruction, the Write Enable (WREN) instruction must be decoded and executed to set the Write Enable Latch (WEL) bit in advance. The WRSR instruction can change the value of Block Protect (BP3, BP2, BP1, BP0) bits to define the protected area of memory (as shown in *Table 2*). The WRSR also can set or reset the Quad enable (QE) bit and set or reset the Status Register Write Disable (SRWD) bit in accordance with Write Protection (WP#/SIO2) pin signal, but has no effect on bit1(WEL) and bit0 (WIP) of the status register. The WRSR instruction cannot be executed once the Hardware Protected Mode (HPM) is entered.

The sequence of issuing WRSR instruction is: CS# goes low→ sending WRSR instruction code→ Status Register data on SI→CS# goes high. (Please refer to *Figure 19*)

The CS# must go high exactly at the byte boundary; otherwise, the instruction will be rejected and not executed. The self-timed Write Status Register cycle time (tW) is initiated as soon as Chip Select (CS#) goes high. The Write in Progress (WIP) bit still can be check out during the Write Status Register cycle is in progress. The WIP sets 1 during the tW timing, and sets 0 when Write Status Register Cycle is completed, and the Write Enable Latch (WEL) bit is reset.

Table 7. Protection Modes

Mode	Status register condition	WP# and SRWD bit status	Memory
Software protection mode (SPM)	Status register can be written in (WEL bit is set to "1") and the SRWD, BP0-BP3 bits can be changed	WP#=1 and SRWD bit=0, or WP#=0 and SRWD bit=0, or WP#=1 and SRWD=1	The protected area cannot be program or erase.
Hardware protection mode (HPM)	The SRWD, BP0-BP3 of status register bits cannot be changed	WP#=0, SRWD bit=1	The protected area cannot be program or erase.

Note:
1. As defined by the values in the Block Protect (BP3, BP2, BP1, BP0) bits of the Status Register, as shown in *Table 2*.

As the above table showing, the summary of the Software Protected Mode (SPM) and Hardware Protected Mode (HPM).

Software Protected Mode (SPM):
- When SRWD bit=0, no matter WP#/SIO2 is low or high, the WREN instruction may set the WEL bit and can change the values of SRWD, BP3, BP2, BP1, BP0. The protected area, which is defined by BP3, BP2, BP1, BP0, is at software protected mode (SPM).
- When SRWD bit=1 and WP#/SIO2 is high, the WREN instruction may set the WEL bit can change the values of SRWD, BP3, BP2, BP1, BP0. The protected area, which is defined by BP3, BP2, BP1, BP0, is at software protected mode (SPM)

Note:
If SRWD bit=1 but WP#/SIO2 is low, it is impossible to write the Status Register even if the WEL bit has previously been set. It is rejected to write the Status Register and not be executed.

Hardware Protected Mode (HPM):
- When SRWD bit=1, and then WP#/SIO2 is low (or WP#/SIO2 is low before SRWD bit=1), it enters the hardware protected mode (HPM). The data of the protected area is protected by software protected mode by BP3, BP2, BP1, BP0 and hardware protected mode by the WP#/SIO2 to against data modification.

Note:
To exit the hardware protected mode requires WP#/SIO2 driving high once the hardware protected mode is entered. If the WP#/SIO2 pin is permanently connected to high, the hardware protected mode can never be entered; only can use software protected mode via BP3, BP2, BP1, BP0.
If the system enter Quad I/O QE=1, the feature of HPM will be disabled.

(6) Read Data Bytes (READ)

The read instruction is for reading data out. The address is latched on rising edge of SCLK, and data shifts out on the falling edge of SCLK at a maximum frequency fR. The first address byte can be at any location. The address is automatically increased to the next higher address after each byte data is shifted out, so the whole memory can be read out at a single READ instruction. The address counter rolls over to 0 when the highest address has been reached.

The sequence of issuing READ instruction is: CS# goes low→sending READ instruction code→ 3-byte address on SI→ data out on SO→to end READ operation can use CS# to high at any time during data out. (Please refer to *Figure 20*)

(7) Read Data Bytes at Higher Speed (FAST_READ)

The FAST_READ instruction is for quickly reading data out. The address is latched on rising edge of SCLK, and data of each bit shifts out on the falling edge of SCLK at a maximum frequency fC. The first address byte can be at any location. The address is automatically increased to the next higher address after each byte data is shifted out, so the whole memory can be read out at a single FAST_READ instruction. The address counter rolls over to 0 when the highest address has been reached.

The sequence of issuing FAST_READ instruction is: CS# goes low→ sending FAST_READ instruction code→ 3-byte address on SI→1-dummy byte (default) address on SI→ data out on SO→ to end FAST_READ operation can use CS# to high at any time during data out. (Please refer to *Figure 21*)

While Program/Erase/Write Status Register cycle is in progress, FAST_READ instruction is rejected without any impact on the Program/Erase/Write Status Register current cycle.

(8) Dual Read Mode (DREAD)

The DREAD instruction enable double throughput of Serial Flash in read mode. The address is latched on rising edge of SCLK, and data of every two bits (interleave on 2 I/O pins) shift out on the falling edge of SCLK at a maximum frequency fT. The first address byte can be at any location. The address is automatically increased to the next higher address after each byte data is shifted out, so the whole memory can be read out at a single DREAD instruction. The address counter rolls over to 0 when the highest address has been reached. Once writing DREAD instruction, the following data out will perform as 2-bit instead of previous 1-bit.

The sequence of issuing DREAD instruction is: CS# goes low → sending DREAD instruction → 3-byte address on SI → 8-bit dummy cycle → data out interleave on SO1 & SO0 → to end DREAD operation can use CS# to high at any time during data out. (Please refer to *Figure 22*)

While Program/Erase/Write Status Register cycle is in progress, DREAD instruction is rejected without any impact on the Program/Erase/Write Status Register current cycle.

(9) 2 x I/O Read Mode (2READ)

The 2READ instruction enable double throughput of Serial Flash in read mode. The address is latched on rising edge of SCLK, and data of every two bits (interleave on 2 I/O pins) shift out on the falling edge of SCLK at a maximum frequency fT. The first address byte can be at any location. The address is automatically increased to the next higher address after each byte data is shifted out, so the whole memory can be read out at a single 2READ instruction. The address counter rolls over to 0 when the highest address has been reached. Once writing 2READ instruction, the following address/dummy/data out will perform as 2-bit instead of previous 1-bit.

The sequence of issuing 2READ instruction is: CS# goes low→ sending 2READ instruction→ 24-bit address interleave on SIO1 & SIO0→ 4 dummy cycles on SIO1 & SIO0→ data out interleave on SIO1 & SIO0→ to end 2READ operation can use CS# to high at any time during data out (Please refer to *Figure 23* for 2 x I/O Read Mode Timing Waveform).

While Program/Erase/Write Status Register cycle is in progress, 2READ instruction is rejected without any impact on the Program/Erase/Write Status Register current cycle.

(10) 4 x I/O Read Mode (4READ)

The 4READ instruction enable quad throughput of Serial Flash in read mode. A Quad Enable (QE) bit of status Register must be set to "1" before sending the 4READ instruction. The address is latched on rising edge of SCLK, and data of every four bits (interleave on 4 I/O pins) shift out on the falling edge of SCLK at a maximum frequency fQ. The first address byte can be at any location. The address is automatically increased to the next higher address after each byte data is shifted out, so the whole memory can be read out at a single 4READ instruction. The address counter rolls over to 0 when the highest address has been reached. Once writing 4READ instruction, the following address/dummy/data out will perform as 4-bit instead of previous 1-bit.

The sequence of issuing 4READ instruction is: CS# goes low→ sending 4READ instruction→ 24-bit address interleave on SIO3, SIO2, SIO1 & SIO0→2+4 dummy cycles→data out interleave on SIO3, SIO2, SIO1 & SIO0→ to end 4READ operation can use CS# to high at any time during data out. (Please refer to *Figure 24*)

While Program/Erase/Write Status Register cycle is in progress, 4READ instruction is rejected without any impact on the Program/Erase/Write Status Register current cycle.

(11) Performance Enhance Mode

The device could waive the command cycle bits if the two cycle bits after address cycle toggles. (Please note *Figure 25* 2xI/O Read Enhance Performance Mode Sequence and *Figure 26* 4xI/O Read Enhance Performance Mode Sequence)

After entering enhance mode, following CS# go high, the device will stay in the read mode and treat CS# go low of the first clock as address instead of command cycle.

Another sequence of issuing 2READ (or 4READ) instruction especially useful in random access is: CS# goes low→sending 2READ (or 4READ) instruction→3-bytes address interleave on SIO1, SIO0 (SIO3, SIO2, SIO1 & SIO0)→Performance enhance toggling bit P[3:0] (P[7:0])→ 2 (or 4) dummy cycles →data out still CS# goes high → CS# goes low (reduce 2READ or 4READ instruction) →24-bit random access address (Please refer to *Figure 25* and *Figure 26* for 2x I/O and 4xI/O Read Enhance Performance Mode Timing Waveforms).

In the 2xI/O performance-enhancing mode, P[3:2] must be toggling with P[1:0]; likewise P[3:0]=21h, 12h, 30h or 03h can make this mode continue and reduce the next 2READ instruction. Once P[3:2] is no longer toggling with P[1:0]; likewise P[3:0]=33h, 00h, 22h or 11h and afterwards CS# is raised and then lowered, the system then will escape from performance enhance mode and return to normal operation.

In the 4xI/O performance-enhancing mode, P[7:4] must be toggling with P[3:0] ; likewise P[7:0]=A5h, 5Ah, F0h or 0Fh can make this mode continue and reduce the next 4READ instruction. Once P[7:4] is no longer toggling with P[3:0]; likewise P[7:0]=FFh,00h,AAh or 55h and afterwards CS# is raised and then lowered, the system then will escape from performance enhance mode and return to normal operation.

(12) Sector Erase (SE)

The Sector Erase (SE) instruction is for erasing the data of the chosen sector to be "1". The instruction is used for any 4K-byte sector. A Write Enable (WREN) instruction must execute to set the Write Enable Latch (WEL) bit before sending the Sector Erase (SE). Any address of the sector (see table of memory organization) is a valid address for Sector Erase (SE) instruction. The CS# must go high exactly at the byte boundary (the least significant bit of the address been latched-in); otherwise, the instruction will be rejected and not executed.

Address bits [Am-A12] (Am is the most significant address) select the sector address.

The sequence of issuing SE instruction is: CS# goes low→ sending SE instruction code→ 3-byte address on SI→ CS# goes high. (Please refer to *Figure 29)*

The self-timed Sector Erase Cycle time (tSE) is initiated as soon as Chip Select (CS#) goes high. The Write in Progress (WIP) bit still can be checked while the Sector Erase cycle is in progress. The WIP sets during the tSE timing, and clears when Sector Erase Cycle is completed, and the Write Enable Latch (WEL) bit is cleared. If the sector is protected by BP3 ~ 0 (WPSEL=0) or by individual lock (WPSEL=1), the Sector Erase (SE) instruction will not be executed on the sector.

(13) Block Erase (BE32K)

The Block Erase (BE32K) instruction is for erasing the data of the chosen block to be "1". The instruction is used for 32K-byte block erase operation. A Write Enable (WREN) instruction must be executed to set the Write Enable Latch (WEL) bit before sending the Block Erase (BE32K). Any address of the block (see table of memory organization) is a valid address for Block Erase (BE32K) instruction. The CS# must go high exactly at the byte boundary (the least significant bit of address byte been latched-in); otherwise, the instruction will be rejected and not executed.

The sequence of issuing BE32K instruction is: CS# goes low→ sending BE32K instruction code→ 3-byte address on SI→CS# goes high. (Please refer to *Figure 30)*

The self-timed Block Erase Cycle time (tBE32K) is initiated as soon as Chip Select (CS#) goes high. The Write in Progress (WIP) bit still can be checked while he Block Erase cycle is in progress. The WIP sets during the tBE32K timing, and clears when Block Erase Cycle is completed, and the Write Enable Latch (WEL) bit is cleared. If the block is protected by BP3 ~ 0 (WPSEL=0) or by individual lock (WPSEL=1), the Block Erase (tBE32K) instruction will not be executed on the block.

(14) Block Erase (BE)

The Block Erase (BE) instruction is for erasing the data of the chosen block to be "1". The instruction is used for 64K-byte block erase operation. A Write Enable (WREN) instruction must be executed to set the Write Enable Latch (WEL) bit before sending the Block Erase (BE). Any address of the block (Please refer to table of memory organization) is a valid address for Block Erase (BE) instruction. The CS# must go high exactly at the byte boundary (the least significant bit of address byte been latched-in); otherwise, the instruction will be rejected and not executed.

The sequence of issuing BE instruction is: CS# goes low→ sending BE instruction code→ 3-byte address on SI→ CS# goes high. (Please refer to *Figure 31*)

The self-timed Block Erase Cycle time (tBE) is initiated as soon as Chip Select (CS#) goes high. The Write in Progress (WIP) bit still can be checked while the Block Erase cycle is in progress. The WIP sets during the tBE timing, and clears when Block Erase Cycle is completed, and the Write Enable Latch (WEL) bit is cleared. If the block is protected by BP3 ~ 0 (WPSEL=0) or by individual lock (WPSEL=1), the Block Erase (BE) instruction will not be executed on the block.

(15) Chip Erase (CE)

The Chip Erase (CE) instruction is for erasing the data of the whole chip to be "1". A Write Enable (WREN) instruction must be executed to set the Write Enable Latch (WEL) bit before sending the Chip Erase (CE). The CS# must go high exactly at the byte boundary, otherwise the instruction will be rejected and not executed.

The sequence of issuing CE instruction is: CS# goes low→sending CE instruction code→CS# goes high. (Please refer to *Figure 32*)

The self-timed Chip Erase Cycle time (tCE) is initiated as soon as Chip Select (CS#) goes high. The Write in Progress (WIP) bit still can be checked while the Chip Erase cycle is in progress. The WIP sets during the tCE timing, and clears when Chip Erase Cycle is completed, and the Write Enable Latch (WEL) bit is cleared. If the chip is protected by BP3 ~ 0 (WPSEL=0) or by individual lock (WPSEL=1), the Chip Erase (CE) instruction will not be executed. It will be only executed when BP3, BP2, BP1, BP0 all set to "0".

(16) Page Program (PP)

The Page Program (PP) instruction is for programming the memory to be "0". A Write Enable (WREN) instruction must be executed to set the Write Enable Latch (WEL) bit before sending the Page Program (PP). The device programs only the last 256 data bytes sent to the device. If the entire 256 data bytes are going to be programmed, A7-A0 (The eight least significant address bits) should be cleared. The last address byte (the 8 least significant address bits, A7-A0) should be set to 0 for 256 bytes page program. If A7-A0 are not all zero, transmitted data that exceed page length are programmed from the starting address (24-bit address that last 8 bit are all 0) of currently selected page. If the data bytes sent to the device exceeds 256, the last 256 data byte is programmed at the request page and previous data will be disregarded. If the data bytes sent to the device has not exceeded 256, the data will be programmed at the request address of the page. There will be no effort on the other data bytes of the same page.

The sequence of issuing PP instruction is: CS# goes low→ sending PP instruction code→ 3-byte address on SI→ at least 1-byte on data on SI→ CS# goes high. (Please refer to *Figure 27*)

The CS# must be kept to low during the whole Page Program cycle; The CS# must go high exactly at the byte boundary (the latest eighth bit of data being latched in), otherwise the instruction will be rejected and will not be executed.

The self-timed Page Program Cycle time (tPP) is initiated as soon as Chip Select (CS#) goes high. The Write in Progress (WIP) bit still can be checked while the Page Program cycle is in progress. The WIP sets during the tPP timing, and clears when Page Program Cycle is completed, and the Write Enable Latch (WEL) bit is cleared. If the page is protected by BP3 ~ 0 (WPSEL=0) or by individual lock (WPSEL=1), the Page Program (PP) instruction will not be executed.

(17) 4 x I/O Page Program (4PP)

The Quad Page Program (4PP) instruction is for programming the memory to be "0". A Write Enable (WREN) instruction must be executed to set the Write Enable Latch (WEL) bit and Quad Enable (QE) bit must be set to "1" before sending the Quad Page Program (4PP). The Quad Page Programming takes four pins: SIO0, SIO1, SIO2, and SIO3 as address and data input, which can improve programmer performance and the effectiveness of application of lower clock less than 70MHz. For system with faster clock, the Quad page program cannot provide more actual favors, because the required internal page program time is far more than the time data flows in. Therefore, we suggest that while executing this command (especially during sending data), user can slow the clock speed down to 70MHz below. The other function descriptions are as same as standard page program.

The sequence of issuing 4PP instruction is: CS# goes low→ sending 4PP instruction code→ 3-byte address on SIO[3:0]→ at least 1-byte on data on SIO[3:0]→CS# goes high. (Please refer to *Figure 28)*

If the page protected by BP3 ~ 0 (WPSEL=0) or by individual lock (WPSEL=1), the Quad page program (4PP) instruction will not be executed.

(18) Deep Power-down (DP)

The Deep Power-down (DP) instruction is for setting the device to minimizing the power consumption, (the standby current is reduced from ISB1 to ISB2). The Deep Power-down mode requires the Deep Power-down (DP) instruction to enter, during the Deep Power-down mode, the device is not active and all Write/Program/Erase instruction are ignored.

The sequence of issuing DP instruction is: CS# goes low→sending DP instruction code→CS# goes high.
(Please refer to *Figure 33*)

Once the DP instruction is set, all instruction will be ignored except the Release from Deep Power-down mode (RDP) and Read Electronic Signature (RES) instruction. (Those instructions allow the ID being reading out). When Power-down, or software reset command the deep power-down mode automatically stops, and when power-up, the device automatically is in standby mode. For DP instruction the CS# must go high exactly at the byte boundary (the latest eighth bit of instruction code been latched-in); otherwise, the instruction will not executed. As soon as Chip Select (CS#) goes high, a delay of tDP is required before entering the Deep Power-down mode.

(19) Release from Deep Power-down (RDP), Read Electronic Signature (RES)

The Release from Deep Power-down (RDP) instruction is completed by driving Chip Select (CS#) High. When Chip Select (CS#) is driven High, the device is put in the Stand-by Power mode. If the device was not previously in the Deep Power-down mode, the transition to the Stand-by Power mode is immediate. If the device was previously in the Deep Power-down mode, though, the transition to the Stand-by Power mode is delayed by tRES2, and Chip Select (CS#) must remain High for at least tRES2(max), as specified in *Table 14*. AC Characteristics. Once in the Stand-by Power mode, the device waits to be selected, so that it can receive, decode and execute instructions. The RDP instruction is only for releasing from Deep Power Down Mode.

RES instruction is for reading out the old style of 8-bit Electronic Signature, whose values are shown as table of ID Definitions on next page. This is not the same as RDID instruction. It is not recommended to use for new design. For new design, please use RDID instruction.

The sequence is shown as *Figure 34* and *Figure 35*. Even in Deep power-down mode, the RDP and RES are also allowed to be executed, only except the device is in progress of program/erase/write cycle; there's no effect on the current program/erase/write cycle in progress.

The RES instruction is ended by CS# goes high after the ID been read out at least once. The ID outputs repeatedly if continuously send the additional clock cycles on SCLK while CS# is at low. If the device was not previously in Deep Power-down mode, the device transition to standby mode is immediate. If the device was previously in Deep Power-down mode, there's a delay of tRES2 to transit to standby mode, and CS# must remain to high at least tRES2(max). Once in the standby mode, the device waits to be selected, so it can be receive, decode, and execute instruction.

(20) Read Electronic Manufacturer ID & Device ID (REMS), (REMS2), (REMS4)

The REMS, REMS2 and REMS4 instruction provides both the JEDEC assigned Manufacturer ID and the specific Device ID.

The instruction is initiated by driving the CS# pin low and shift the instruction code "90h", "DFh" or "EFh" followed by two dummy bytes and one bytes address (A7~A0). After which, the Manufacturer ID for Macronix (C2h) and the Device ID are shifted out on the falling edge of SCLK with most significant bit (MSB) first as shown in *Figure 36*. The Device ID values are listed in table of ID Definitions. If the one-byte address is initially set to 01h, then the Device ID will be read first and then followed by the Manufacturer ID. The Manufacturer and Device IDs can be read continuously, alternating from one to the other. The instruction is completed by driving CS# high.

Table 8. ID Definitions

Command Type	MX25U8033E		
RDID (JEDEC ID)	manufacturer ID	memory type	memory density
	C2	25	34
RES	electronic ID		
	34		
REMS/REMS2/REMS4	manufacturer ID	device ID	
	C2	34	

(21) Enter Secured OTP (ENSO)

The ENSO instruction is for entering the additional 4K-bit secured OTP mode. While device is in 4K-bit secured OTP mode, main array access is not available. The additional 4K-bit secured OTP is independent from main array, and may be used to store unique serial number for system identifier. After entering the Secured OTP mode, follow standard read or program procedure to read out the data or update data. The Secured OTP data cannot be updated again once it is lock-down.

The sequence of issuing ENSO instruction is: CS# goes low→ sending ENSO instruction to enter Secured OTP mode→ CS# goes high.

Please note that WRSR/WRSCUR/WPSEL commands are not acceptable during the access of secure OTP region, once security OTP is lock down, only read related commands are valid.

(22) Exit Secured OTP (EXSO)

The EXSO instruction is for exiting the additional 4K-bit secured OTP mode.

The sequence of issuing EXSO instruction is: CS# goes low→ sending EXSO instruction to exit Secured OTP mode→ CS# goes high.

(23) Read Security Register (RDSCUR)

The RDSCUR instruction is for reading the value of Security Register bits. The Read Security Register can be read at any time (even in program/erase/write status register/write security register condition) and continuously.

The sequence of issuing RDSCUR instruction is : CS# goes low→sending RDSCUR instruction→Security Register data out on SO→ CS# goes high. (Please see *Figure 37*)

The definition of the Security Register bits is as below:

Secured OTP Indicator bit. The Secured OTP indicator bit shows the chip is locked by factory or not. When it is "0", it indicates non-factory lock; "1" indicates factory-lock.

Lock-down Secured OTP (LDSO) bit. By writing WRSCUR instruction, the LDSO bit may be set to "1" for customer lock-down purpose. However, once the bit is set to "1" (lock-down), the LDSO bit and the 4K-bit Secured OTP area cannot be updated any more.

Table 9. Security Register Definition

Bit7	Bit6	Bit5	Bit4	Bit3	Bit2	Bit1	Bit0
WPSEL	E_FAIL	P_FAIL	Reserved	Reserved	Reserved	LDSO (indicate if lock-down)	Secured OTP indicator bit
0=normal WP mode 1=individual mode (default=0)	0=normal Erase succeed 1=individual Erase failed (default=0)	0=normal Program succeed 1=indicate Program failed (default=0)	-	-	-	0 = not lock-down 1 = lock-down (cannot program/ erase OTP)	0 = non-factory lock 1 = factory lock
Non-volatile bit (OTP)	Volatile bit	Volatile bit	Volatile bit	Volatile bit	Volatile bit	Non-volatile bit (OTP)	Non-volatile bit (OTP)

(24) Write Security Register (WRSCUR)

The WRSCUR instruction is for setting the values of Security Register Bits. The WREN (Write Enable) instruction is required before issuing WRSCUR instruction. The WRSCUR instruction may change the values of bit1 (LDSO bit) for customer to lock-down the 4K-bit Secured OTP area. Once the LDSO bit is set to "1", the Secured OTP area cannot be updated any more. The LDSO bit is an OTP bit. Once the LDSO bit is set, the value of LDSO bit can not be altered any more.

The sequence of issuing WRSCUR instruction is :CS# goes low→ sending WRSCUR instruction → CS# goes high. (Please see *Figure 38*)

The CS# must go high exactly at the boundary; otherwise, the instruction will be rejected and not executed.

(25) Write Protection Selection (WPSEL)

When the system accepts and executes WPSEL instruction, bit 7 in the security register will be set. The WREN (Write Enable) instruction is required before issuing WPSEL instruction. It will activate SBLK, SBULK, RDBLOCK, GBLK, GBULK etc instructions to conduct block lock protection and replace the original Software Protect Mode (SPM) use (BP3~BP0) indicated block methods.

The sequence of issuing WPSEL instruction is: CS# goes low → sending WPSEL instruction to enter the individual block protect mode→ CS# goes high.

Every time after the system is powered-on the Security Register bit 7 is checked, if WPSEL=1, then all the blocks and sectors will be write-protected by default. User may only unlock the blocks or sectors via SBULK and GBULK instructions. Program or erase functions can only be operated after the Unlock instruction is executed.

Once WPSEL is set, it cannot be changed.

WPSEL instruction function flow is as follows:

Figure 3. WPSEL Flow

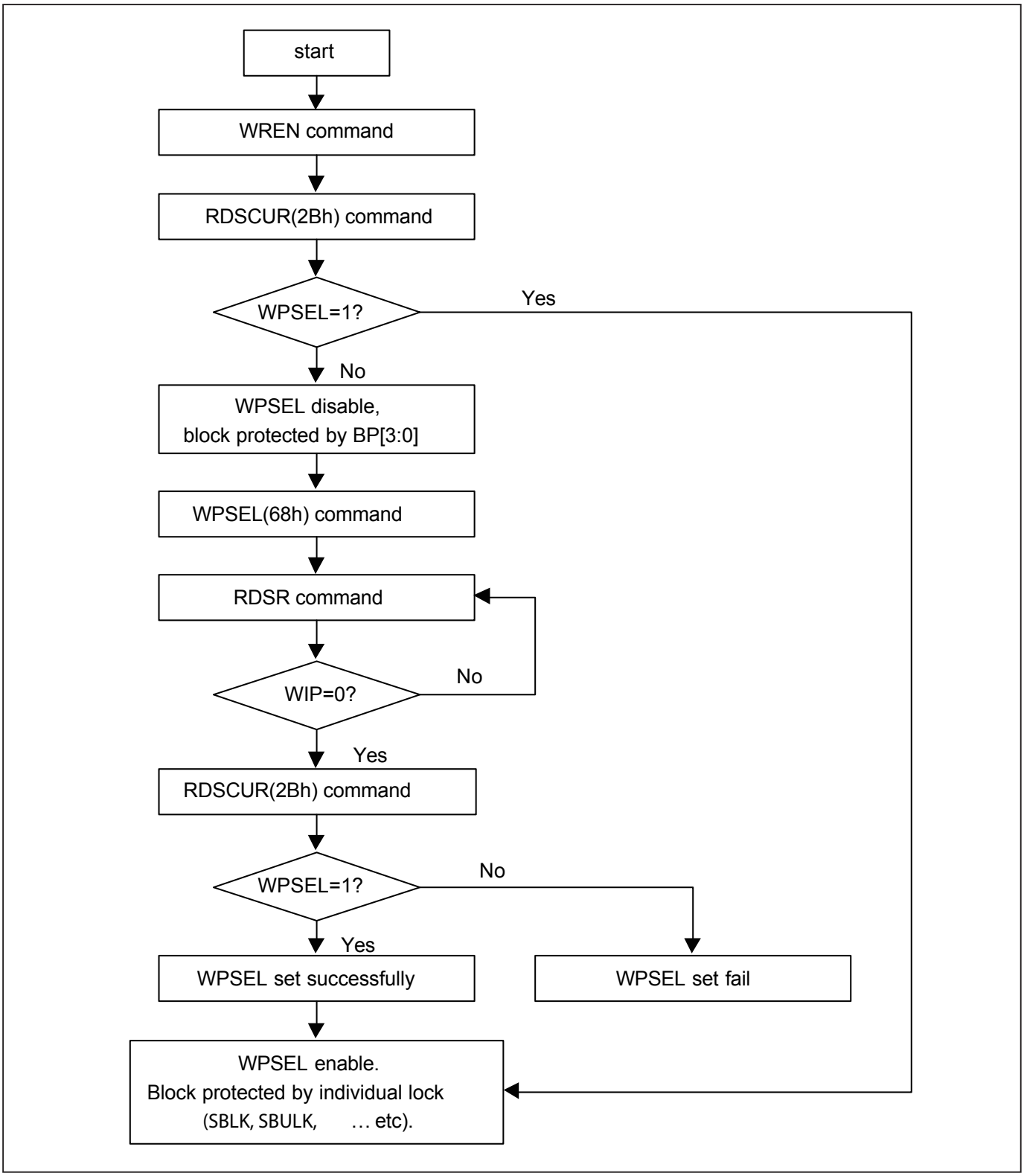

(26) Single Block Lock/Unlock Protection (SBLK/SBULK)

These instructions are only effective after WPSEL was executed. The SBLK instruction is for write protection a specified block (or sector) of memory, using A_{MAX}-A16 or (A_{MAX}-A12) address bits to assign a 64Kbyte block (or 4K bytes sector) to be protected as read only. The SBULK instruction will cancel the block (or sector) write protection state. This feature allows user to stop protecting the entire block (or sector) through the chip unprotect command (GBULK).

The WREN (Write Enable) instruction is required before issuing SBLK/SBULK instruction.
The sequence of issuing SBLK/SBULK instruction is: CS# goes low → send SBLK/SBULK (36h/39h) instruction→send 3 address bytes assign one block (or sector) to be protected on SI pin → CS# goes high. The CS# must go high exactly at the byte boundary, otherwise the instruction will be rejected and not be executed.

SBLK/SBULK instruction function flow is as follows:

Figure 4. Block Lock Flow

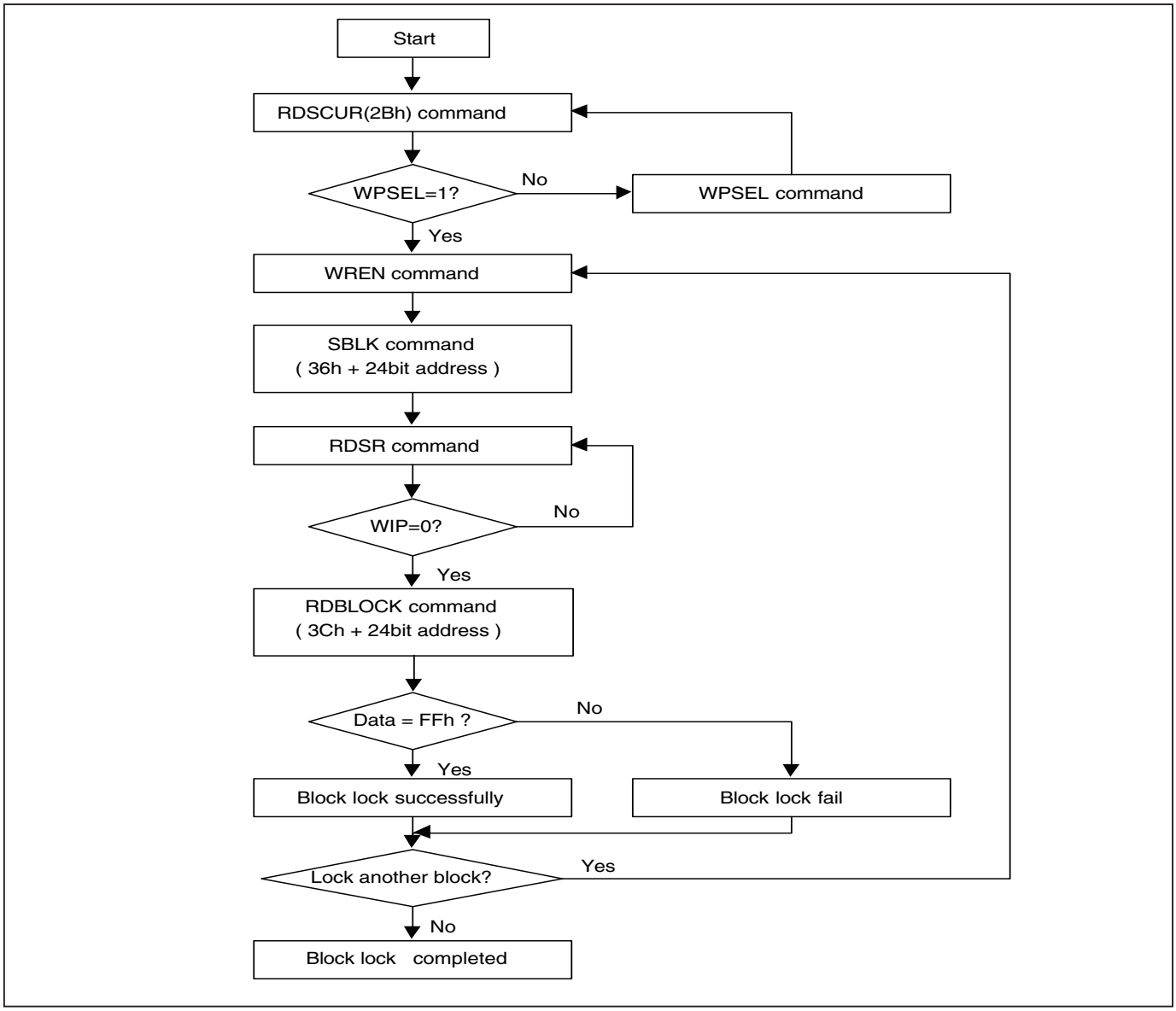

Figure 5. Block Unlock Flow

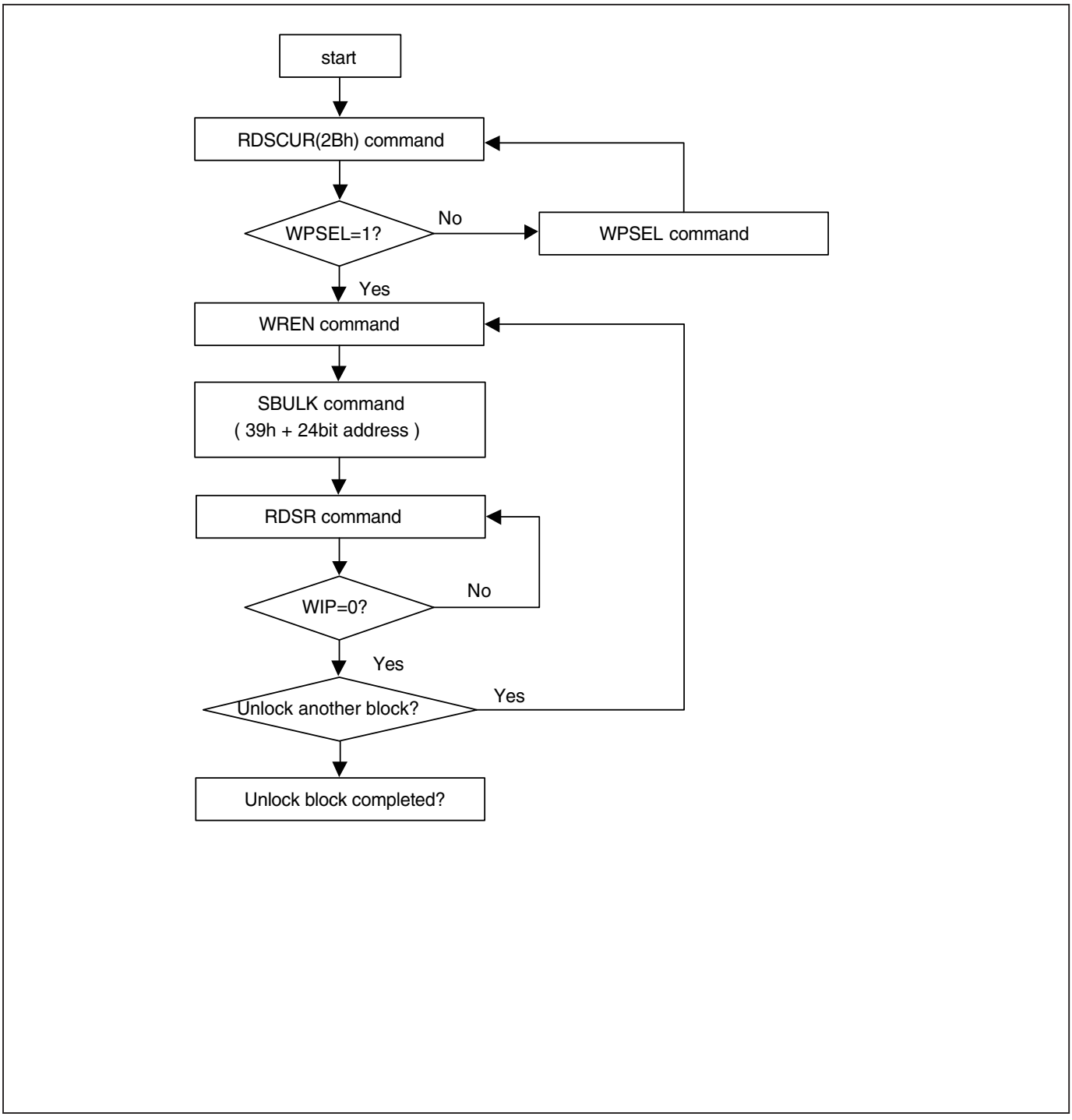

(27) Read Block Lock Status (RDBLOCK)

This instruction is only effective after WPSEL was executed. The RDBLOCK instruction is for reading the status of protection lock of a specified block (or sector), using AMAX-A16 (or AMAX-A12) address bits to assign a 64K bytes block (4K bytes sector) and read protection lock status bit which the first byte of Read-out cycle. The status bit is"1" to indicate that this block has be protected, that user can read only but cannot write/program /erase this block. The status bit is "0" to indicate that this block hasn't be protected, and user can read and write this block.

The sequence of issuing RDBLOCK instruction is: CS# goes low → send RDBLOCK (3Ch) instruction → send 3 address bytes to assign one block on SI pin → read block's protection lock status bit on SO pin → CS# goes high.

(28) Gang Block Lock/Unlock (GBLK/GBULK)

These instructions are only effective after WPSEL was executed. The GBLK/GBULK instruction is for enable/disable the lock protection block of the whole chip.

The WREN (Write Enable) instruction is required before issuing GBLK/GBULK instruction.
The sequence of issuing GBLK/GBULK instruction is: CS# goes low → send GBLK/GBULK (7Eh/98h) instruction →CS# goes high.

The CS# must go high exactly at the byte boundary, otherwise, the instruction will be rejected and not be executed.

(29) Read SFDP Mode (RDSFDP)

The Serial Flash Discoverable Parameter (SFDP) standard provides a consistent method of describing the functional and feature capabilities of serial flash devices in a standard set of internal parameter tables. These parameter tables can be interrogated by host system software to enable adjustments needed to accommodate divergent features from multiple vendors. The concept is similar to the one found in the Introduction of JEDEC Standard, JESD68 on CFI.

The sequence of issuing RDSFDP instruction is CS# goes low→send RDSFDP instruction (5Ah)→send 3 address bytes on SI pin→send 1 dummy byte on SI pin→read SFDP code on SO→to end RDSFDP operation can use CS# to high at any time during data out.

SFDP is a JEDEC Standard, JESD216.

Figure 6. Read Serial Flash Discoverable Parameter (RDSFDP) Sequence

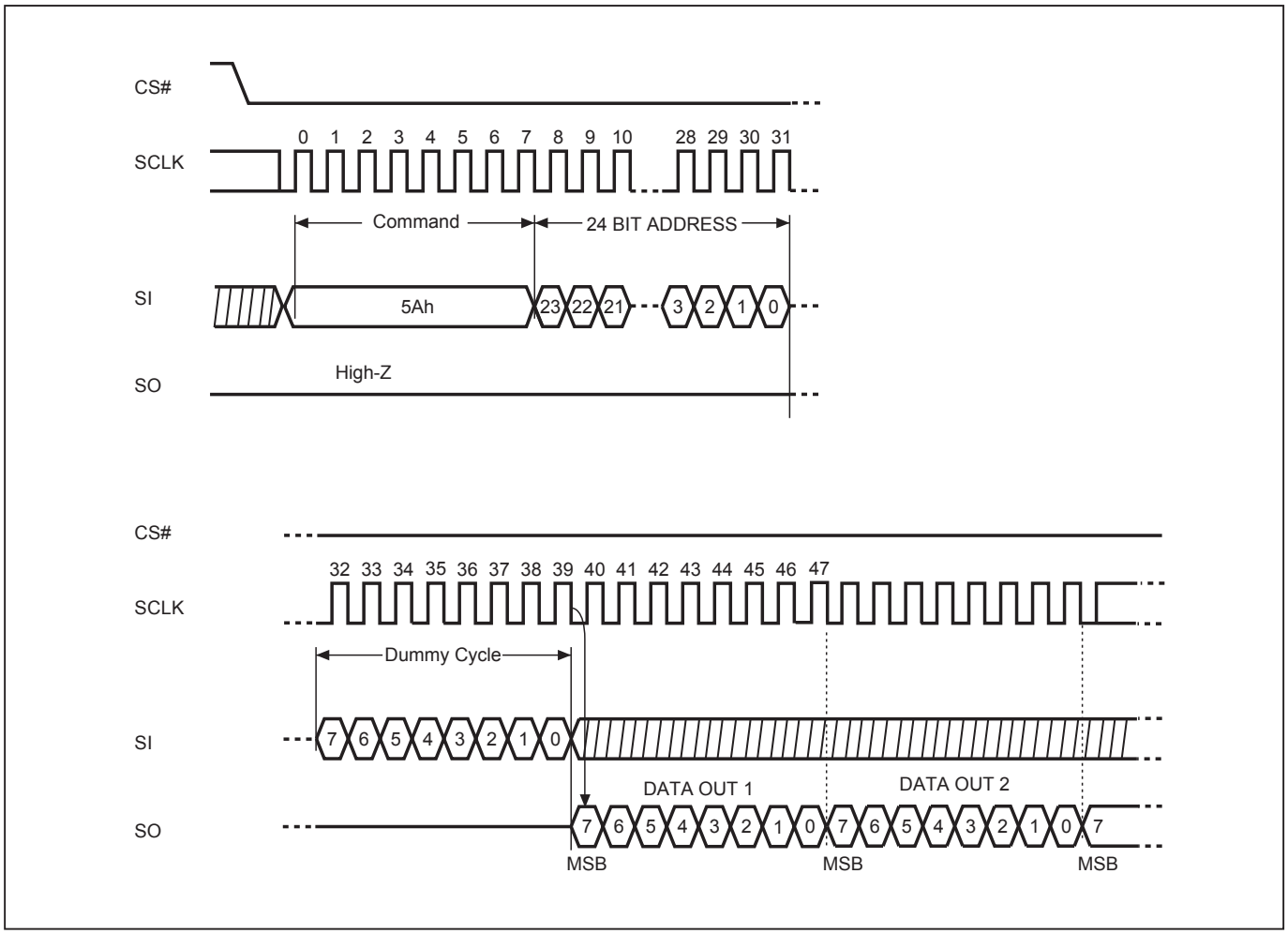

Table 10. Signature and Parameter Identification Data Values

Description	Comment	Add (h) (Byte)	DW Add (Bit)	Data (h/b) (Note1)	Data (h)
SFDP Signature	Fixed: 50444653h	00h	07:00	53h	53h
		01h	15:08	46h	46h
		02h	23:16	44h	44h
		03h	31:24	50h	50h
SFDP Minor Revision Number	Start from 00h	04h	07:00	00h	00h
SFDP Major Revision Number	Start from 01h	05h	15:08	01h	01h
Number of Parameter Headers	This number is 0-based. Therefore, 0 indicates 1 parameter header.	06h	23:16	01h	01h
Unused		07h	31:24	FFh	FFh
ID number (JEDEC)	00h: it indicates a JEDEC specified header.	08h	07:00	00h	00h
Parameter Table Minor Revision Number	Start from 00h	09h	15:08	00h	00h
Parameter Table Major Revision Number	Start from 01h	0Ah	23:16	01h	01h
Parameter Table Length (in double word)	How many DWORDs in the Parameter table	0Bh	31:24	09h	09h
Parameter Table Pointer (PTP)	First address of JEDEC Flash Parameter table	0Ch	07:00	30h	30h
		0Dh	15:08	00h	00h
		0Eh	23:16	00h	00h
Unused		0Fh	31:24	FFh	FFh
ID number (Macronix manufacturer ID)	it indicates Macronix manufacturer ID	10h	07:00	C2h	C2h
Parameter Table Minor Revision Number	Start from 00h	11h	15:08	00h	00h
Parameter Table Major Revision Number	Start from 01h	12h	23:16	01h	01h
Parameter Table Length (in double word)	How many DWORDs in the Parameter table	13h	31:24	04h	04h
Parameter Table Pointer (PTP)	First address of Macronix Flash Parameter table	14h	07:00	60h	60h
		15h	15:08	00h	00h
		16h	23:16	00h	00h
Unused		17h	31:24	FFh	FFh

Table 11. Parameter Table (0): JEDEC Flash Parameter Tables

Description	Comment	Add (h) (Byte)	DW Add (Bit)	Data (h/b) (Note1)	Data (h)
Block/Sector Erase sizes	00: Reserved, 01: 4KB erase, 10: Reserved, 11: not support 4KB erase	30h	01:00	01b	E5h
Write Granularity	0: 1Byte, 1: 64Byte or larger		02	1b	
Write Enable Instruction Required for Writing to Volatile Status Registers	0: not required 1: required 00h to be written to the status register		03	0b	
Write Enable Opcode Select for Writing to Volatile Status Registers	0: use 50h opcode, 1: use 06h opcode Note: If target flash status register is nonvolatile, then bits 3 and 4 must be set to 00b.		04	0b	
Unused	Contains 111b and can never be changed		07:05	111b	
4KB Erase Opcode		31h	15:08	20h	20h
(1-1-2) Fast Read (Note2)	0=not support 1=support	32h	16	1b	B1h
Address Bytes Number used in addressing flash array	00: 3Byte only, 01: 3 or 4Byte, 10: 4Byte only, 11: Reserved		18:17	00b	
Double Transfer Rate (DTR) Clocking	0=not support 1=support		19	0b	
(1-2-2) Fast Read	0=not support 1=support		20	1b	
(1-4-4) Fast Read	0=not support 1=support		21	1b	
(1-1-4) Fast Read	0=not support 1=support		22	0b	
Unused			23	1b	
Unused		33h	31:24	FFh	FFh
Flash Memory Density		37h:34h	31:00	007FFFFFh	
(1-4-4) Fast Read Number of Wait states (Note3)	0 0000b: Wait states (Dummy Clocks) not support	38h	04:00	0 0100b	44h
(1-4-4) Fast Read Number of Mode Bits (Note4)	000b: Mode Bits not support		07:05	010b	
(1-4-4) Fast Read Opcode		39h	15:08	EBh	EBh
(1-1-4) Fast Read Number of Wait states	0 0000b: Wait states (Dummy Clocks) not support	3Ah	20:16	0 0000b	00h
(1-1-4) Fast Read Number of Mode Bits	000b: Mode Bits not support		23:21	000b	
(1-1-4) Fast Read Opcode		3Bh	31:24	FFh	FFh

Description	Comment	Add (h) (Byte)	DW Add (Bit)	Data (h/b) (Note1)	Data (h)
(1-1-2) Fast Read Number of Wait states	0 0000b: Wait states (Dummy Clocks) not support	3Ch	04:00	0 1000b	08h
(1-1-2) Fast Read Number of Mode Bits	000b: Mode Bits not support		07:05	000b	
(1-1-2) Fast Read Opcode		3Dh	15:08	3Bh	3Bh
(1-2-2) Fast Read Number of Wait states	0 0000b: Wait states (Dummy Clocks) not support	3Eh	20:16	0 0100b	04h
(1-2-2) Fast Read Number of Mode Bits	000b: Mode Bits not support		23:21	000b	
(1-2-2) Fast Read Opcode		3Fh	31:24	BBh	BBh
(2-2-2) Fast Read	0=not support 1=support	40h	00	0b	EEh
Unused			03:01	111b	
(4-4-4) Fast Read	0=not support 1=support		04	0b	
Unused			07:05	111b	
Unused		43h:41h	31:08	FFh	FFh
Unused		45h:44h	15:00	FFh	FFh
(2-2-2) Fast Read Number of Wait states	0 0000b: Wait states (Dummy Clocks) not support	46h	20:16	0 0000b	00h
(2-2-2) Fast Read Number of Mode Bits	000b: Mode Bits not support		23:21	000b	
(2-2-2) Fast Read Opcode		47h	31:24	FFh	FFh
Unused		49h:48h	15:00	FFh	FFh
(4-4-4) Fast Read Number of Wait states	0 0000b: Wait states (Dummy Clocks) not support	4Ah	20:16	0 0000b	00h
(4-4-4) Fast Read Number of Mode Bits	000b: Mode Bits not support		23:21	000b	
(4-4-4) Fast Read Opcode		4Bh	31:24	FFh	FFh
Sector Type 1 Size	Sector/block size = 2^N bytes (Note5) 0x00b: this sector type doesn't exist	4Ch	07:00	0Ch	0Ch
Sector Type 1 erase Opcode		4Dh	15:08	20h	20h
Sector Type 2 Size	Sector/block size = 2^N bytes 0x00b: this sector type doesn't exist	4Eh	23:16	0Fh	0Fh
Sector Type 2 erase Opcode		4Fh	31:24	52h	52h
Sector Type 3 Size	Sector/block size = 2^N bytes 0x00b: this sector type doesn't exist	50h	07:00	10h	10h
Sector Type 3 erase Opcode		51h	15:08	D8h	D8h
Sector Type 4 Size	Sector/block size = 2^N bytes 0x00b: this sector type doesn't exist	52h	23:16	00h	00h
Sector Type 4 erase Opcode		53h	31:24	FFh	FFh

Table 12. Parameter Table (1): Macronix Flash Parameter Tables

Description	Comment	Add (h) (Byte)	DW Add (Bit)	Data (h/b) (Note1)	Data (h)
Vcc Supply Maximum Voltage	2000h=2.000V 2700h=2.700V 3600h=3.600V	61h:60h	07:00 15:08	00h 20h	00h 20h
Vcc Supply Minimum Voltage	1650h=1.650V 2250h=2.250V 2350h=2.350V 2700h=2.700V	63h:62h	23:16 31:24	50h 16h	50h 16h
H/W Reset# pin	0=not support 1=support	65h:64h	00	0b	4FF6h
H/W Hold# pin	0=not support 1=support		01	1b	
Deep Power Down Mode	0=not support 1=support		02	1b	
S/W Reset	0=not support 1=support		03	0b	
S/W Reset Opcode	Reset Enable (66h) should be issued before Reset Opcode		11:04	1111 1111b (FFh)	
Program Suspend/Resume	0=not support 1=support		12	0b	
Erase Suspend/Resume	0=not support 1=support		13	0b	
Unused			14	1b	
Wrap-Around Read mode	0=not support 1=support		15	0b	
Wrap-Around Read mode Opcode		66h	23:16	FFh	FFh
Wrap-Around Read data length	08h:support 8B wrap-around read 16h:8B&16B 32h:8B&16B&32B 64h:8B&16B&32B&64B	67h	31:24	FFh	FFh
Individual block lock	0=not support 1=support	6Bh:68h	00	1b	C8D9h
Individual block lock bit (Volatile/Nonvolatile)	0=Volatile 1=Nonvolatile		01	0b	
Individual block lock Opcode			09:02	0011 0110b (36h)	
Individual block lock Volatile protect bit default protect status	0=protect 1=unprotect		10	0b	
Secured OTP	0=not support 1=support		11	1b	
Read Lock	0=not support 1=support		12	0b	
Permanent Lock	0=not support 1=support		13	0b	
Unused			15:14	11b	
Unused			31:16	FFh	FFh
Unused		6Fh:6Ch	31:00	FFh	FFh

Note 1: h/b is hexadecimal or binary.

Note 2: **(x-y-z)** means I/O mode nomenclature used to indicate the number of active pins used for the opcode (x), address (y), and data (z). At the present time, the only valid Read SFDP instruction modes are: (1-1-1), (2-2-2), and (4-4-4)

Note 3: **Wait States** is required dummy clock cycles after the address bits or optional mode bits.

Note 4: **Mode Bits** is optional control bits that follow the address bits. These bits are driven by the system controller if they are specified. (eg,read performance enhance toggling bits)

Note 5: 4KB=2^0Ch,32KB=2^0Fh,64KB=2^10h

Note 6: All unused and undefined area data is blank FFh.

POWER-ON STATE

The device is at the following states after power-up:
- Standby mode (please note it is not deep power-down mode)
- Write Enable Latch (WEL) bit is reset

The device must not be selected during power-up and power-down stage while the VCC reaches the following lev
- VCC minimum at power-up stage and then after a delay of tVSL
- GND at power-down

Please note that a pull-up resistor on CS# may ensure a safe and proper power-up/down level.

An internal power-on reset (POR) circuit may protect the device from data corruption and inadvertent data change during power up state. When VCC is lower than VWI (POR threshold voltage value), the internal logic is reset and the flash device has no response to any command.

For further protection on the device, after VCC reaching the VWI level, a tPUW time delay is required before the device is fully accessible for commands like write enable (WREN), page program (PP), quad page program (4PP), sector erase (SE), block erase 32KB (BE32K), block erase (BE), chip erase (CE), WRSCUR and write status register (WRSR). If the VCC does not reach the VCC minimum level, the correct operation is not guaranteed. The write, erase, and program command should be sent after the below time delay:
- tPUW after VCC reached VWI level
- tVSL after VCC reached VCC minimum level

The device can accept read command after VCC reached VCC minimum and a time delay of tVSL, even time of tPUW has not passed.
Please refer to the figure of "power-up timing".

Note:
- To stabilize the VCC level, the VCC rail decoupled by a suitable capacitor close to package pins is recommended. (generally around 0.1uF)
- At power-down stage, the VCC drops below VWI level, all operations are disable and device has no response to any command. The data corruption might occur during this stage if a write, program, erase cycle is in progress.

ELECTRICAL SPECIFICATIONS

ABSOLUTE MAXIMUM RATINGS

RATING		VALUE
Ambient Operating Temperature	Industrial grade	-40°C to 85°C
Storage Temperature		-65°C to 150°C
Applied Input Voltage		-0.5V to VCC+0.5V
Applied Output Voltage		-0.5V to VCC+0.5V
VCC to Ground Potential		-0.5V to VCC+0.5V

NOTICE:
1. Stresses greater than those listed under ABSOLUTE MAXIMUM RATINGS may cause permanent damage to the device. This is stress rating only and functional operational sections of this specification is not implied. Exposure to absolute maximum rating conditions for extended period may affect reliability.
2. Specifications contained within the following tables are subject to change.
3. During voltage transitions, all pins may overshoot to VCC+1.0V or -0.5V for period up to 20ns.
4. All input and output pins may overshoot to VCC+0.2V.

Figure 7. Maximum Negative Overshoot Waveform

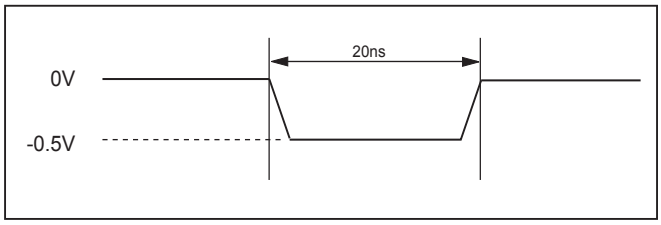

Figure 8. Maximum Positive Overshoot Waveform

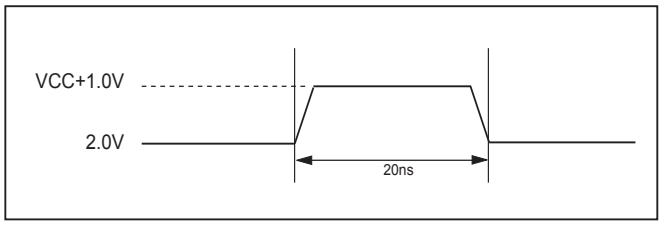

CAPACITANCE TA = 25°C, f = 1.0 MHz

SYMBOL	PARAMETER	MIN.	TYP.	MAX.	UNIT	CONDITIONS
CIN	Input Capacitance			6	pF	VIN = 0V
COUT	Output Capacitance			8	pF	VOUT = 0V

Figure 9. INPUT TEST WAVEFORMS AND MEASUREMENT LEVEL

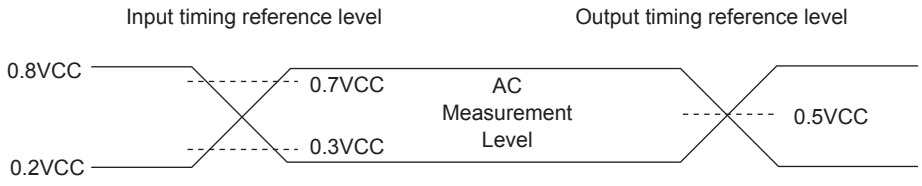

Note: Input pulse rise and fall time are <5ns

Figure 10. OUTPUT LOADING

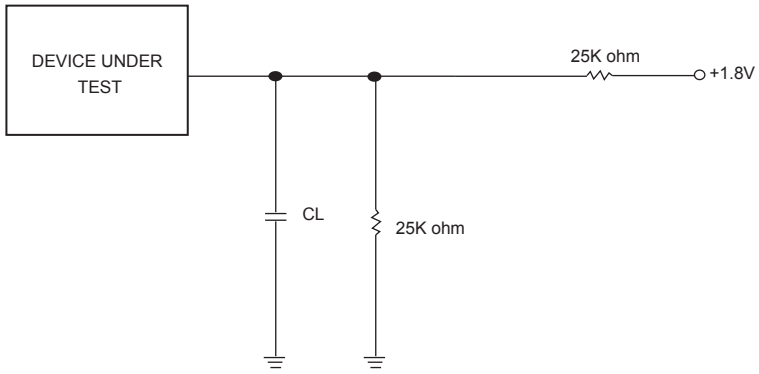

CL=30pF Including jig capacitance

Table 13. DC CHARACTERISTICS (Temperature = -40°C to 85°C, VCC = 1.65V ~ 2.0V)

SYMBOL	PARAMETER	NOTES	MIN.	TYP.	MAX.	UNITS	TEST CONDITIONS
ILI	Input Load Current	1			±2	uA	VCC = VCC Max, VIN = VCC or GND
ILO	Output Leakage Current	1			±2	uA	VCC = VCC Max, VOUT = VCC or GND
ISB1	VCC Standby Current	1		25	35	uA	VIN = VCC or GND, CS# = VCC
ISB2	Deep Power-down Current			3	8	uA	VIN = VCC or GND, CS# = VCC
ICC1	VCC Read	1			12	mA	f=80MHz, SCLK=0.1VCC/0.9VCC, SO=Open
					7	mA	f=33MHz, SCLK=0.1VCC/0.9VCC, SO=Open
ICC2	VCC Program Current (PP)	1		20	25	mA	Program in Progress, CS# = VCC
ICC3	VCC Write Status Register (WRSR) Current				20	mA	Program status register in progress, CS#=VCC
ICC4	VCC Sector/Block (32K, 64K) Erase Current (SE/BE/BE32K)	1		20	25	mA	Erase in Progress, CS#=VCC
ICC5	VCC Chip Erase Current (CE)	1		20	25	mA	Erase in Progress, CS#=VCC
VIL	Input Low Voltage		-0.5		0.2VCC	V	
VIH	Input High Voltage		0.8VCC		VCC+0.4	V	
VOL	Output Low Voltage				0.2	V	IOL = 100uA
VOH	Output High Voltage		VCC-0.2			V	IOH = -100uA

Note 1. Typical values at VCC = 1.8V, T = 25°C. These currents are valid for all product versions (package and speeds).

Table 14. AC CHARACTERISTICS (Temperature = -40°C to 85°C, VCC = 1.65V ~ 2.0V)

Symbol	Alt.	Parameter		Min.	Typ.	Max.	Unit
fSCLK	fC	Clock Frequency for the following instructions: FAST_READ, RDSFDP, PP, SE, BE, CE, DP, RES,RDP WREN, WRDI, RDID, RDSR, WRSR		D.C.		80	MHz
fRSCLK	fR	Clock Frequency for READ instructions				50	MHz
fTSCLK	fT	Clock Frequency for 2READ instructions				80	MHz
	fQ	Clock Frequency for 4READ instructions				70	MHz
f4PP		Clock Frequency for 4PP (Quad page program)				70	MHz
tCH(1)	tCLH	Clock High Time	Serial (fSCLK)	6			ns
			Normal Read (fRSCLK)	9			ns
			4PP (70MHz)	7			
tCL(1)	tCLL	Clock Low Time	Serial (fSCLK)	6			ns
			Normal Read (fRSCLK)	9			ns
			4PP (70MHz)	7			
tCLCH(2)		Clock Rise Time (3) (peak to peak)		0.1			V/ns
tCHCL(2)		Clock Fall Time (3) (peak to peak)		0.1			V/ns
tSLCH	tCSS	CS# Active Setup Time (relative to SCLK)		7			ns
tCHSL		CS# Not Active Hold Time (relative to SCLK)		5			ns
tDVCH	tDSU	Data In Setup Time		2			ns
tCHDX	tDH	Data In Hold Time		5			ns
tCHSH		CS# Active Hold Time (relative to SCLK)		5			ns
tSHCH		CS# Not Active Setup Time (relative to SCLK)		7			ns
tSHSL(3)	tCSH	CS# Deselect Time	Read	12			ns
			Write/Erase/Program	30			ns
tSHQZ(2)	tDIS	Output Disable Time				8	ns
tHLCH		HOLD# Active Setup Time (relative to SCLK)		4			ns
tCHHH		HOLD# Active Hold Time (relative to SCLK)		4			ns
tHHCH		HOLD# Not Active Setup Time (relative to SCLK)		4			ns
tCHHL		HOLD# Not Active Hold Time (relative to SCLK)		4			ns
tHHQX	tLZ	HOLD# to Output Low-Z				8	ns
tHLQZ	tHZ	HOLD# to Output High-Z				8	ns
tCLQV	tV	Clock Low to Output Valid Loading: 30pF/15pF	Loading: 30pF			8	ns
			Loading: 15pF			6	ns
tCLQX	tHO	Output Hold Time		0			ns
tWHSL		Write Protect Setup Time		20			ns
tSHWL		Write Protect Hold Time		100			ns
tDP(2)		CS# High to Deep Power-down Mode				10	us
tRES1(2)		CS# High to Standby Mode without Electronic Signature Read				10	us
tRES2(2)		CS# High to Standby Mode with Electronic Signature Read				10	us
tW		Write Status Register Cycle Time				40	ms
tBP		Byte-Program			15	30	us
tPP		Page Program Cycle Time			1.2	3	ms
tSE		Sector Erase Cycle Time			60	200	ms
tBE32		Block Erase (32KB) Cycle Time			250	1000	ms
tBE		Block Erase (64KB) Cycle Time			500	2000	ms
tCE		Chip Erase Cycle Time			5	10	s

Notes:
1. tCH + tCL must be greater than or equal to 1/ Frequency.
2. Value guaranteed by characterization, not 100% tested in production.
3. Only applicable as a constraint for a WRSR instruction when SRWD is set at 1.
4. Test condition is shown as Figure 8, 9.

Timing Analysis

Figure 11. Serial Input Timing

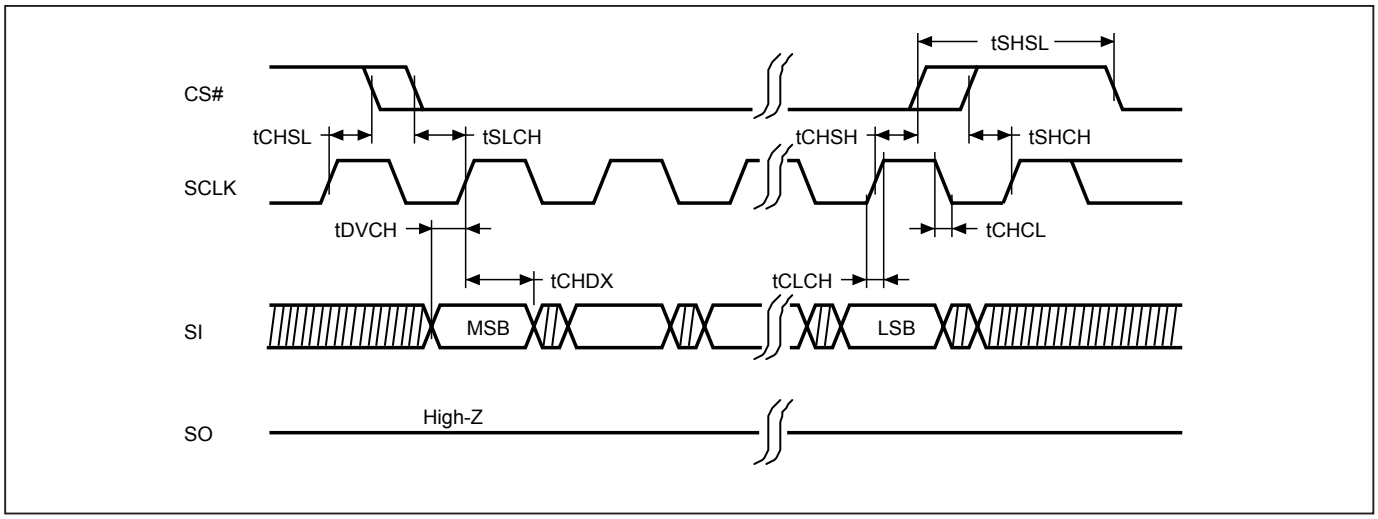

Figure 12. Output Timing

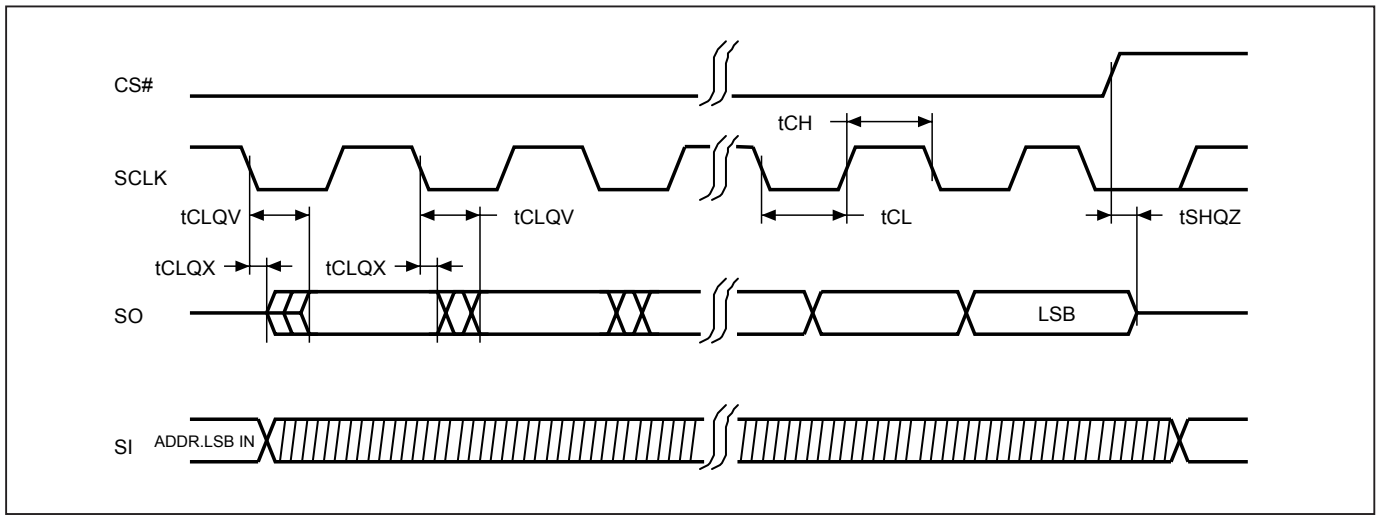

Figure 13. Hold Timing

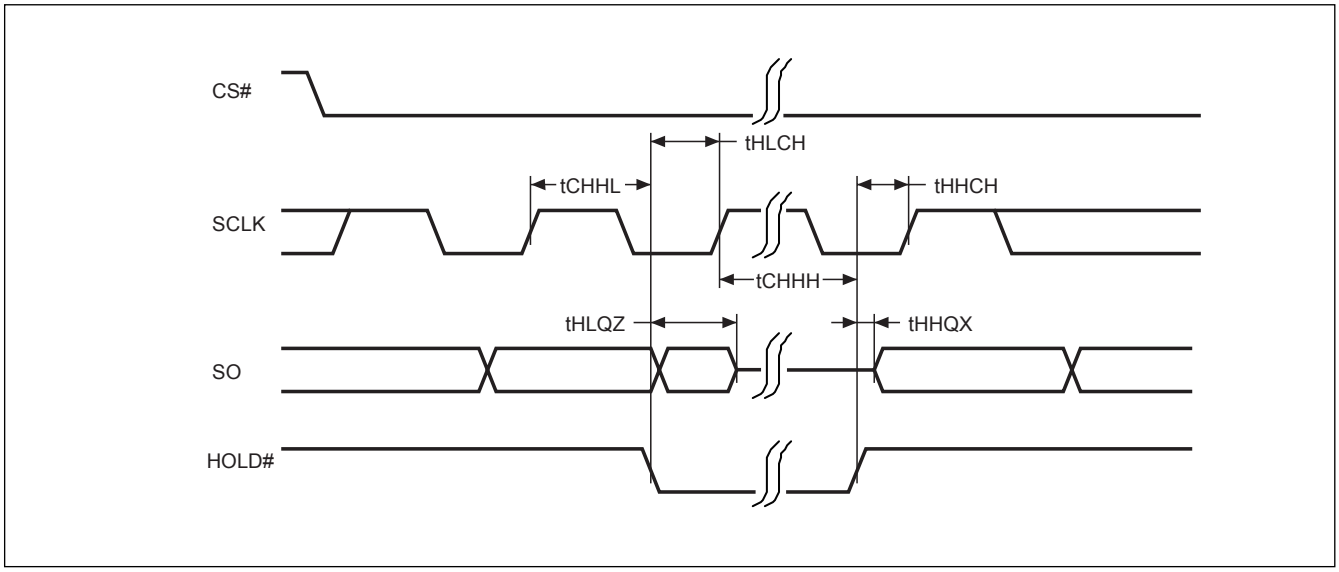

Figure 14. WP# Setup Timing and Hold Timing during WRSR when SRWD=1

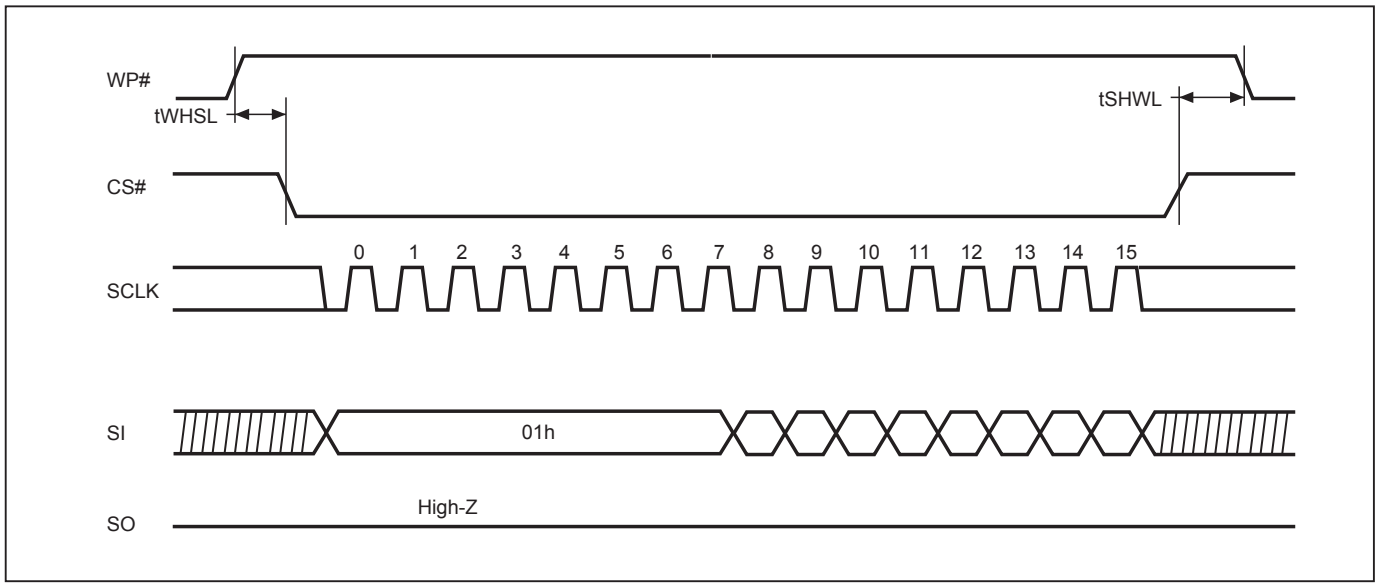

Figure 15. Write Enable (WREN) Sequence (Command 06)

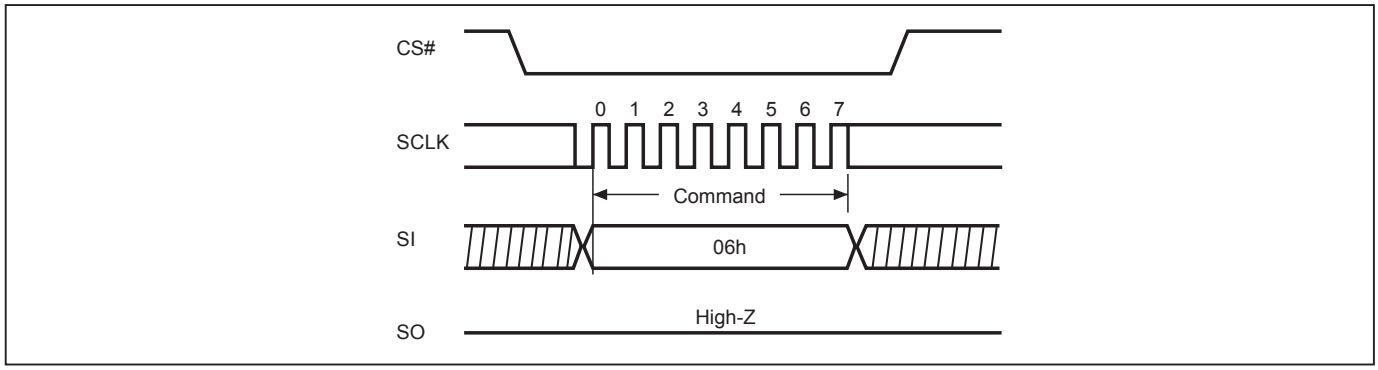

Figure 16. Write Disable (WRDI) Sequence (Command 04)

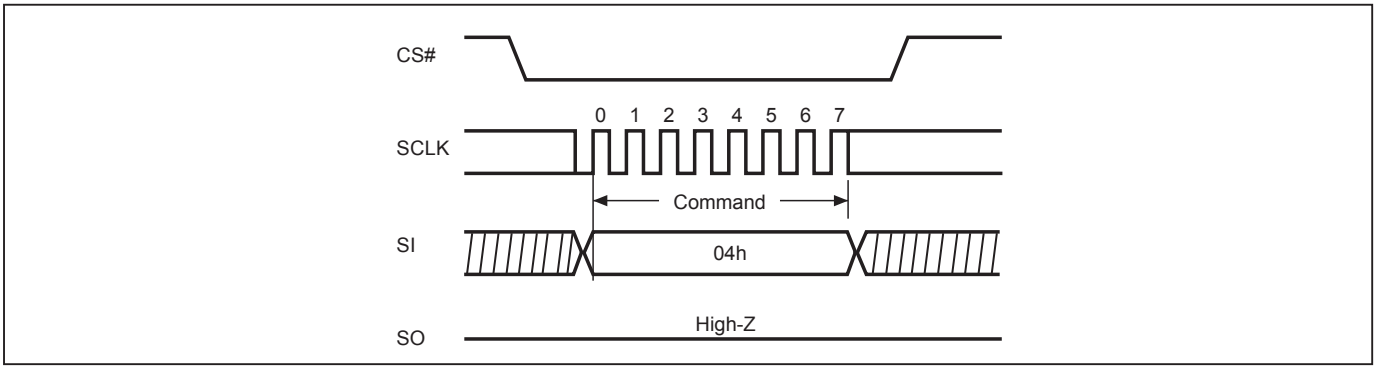

Figure 17. Read Identification (RDID) Sequence (Command 9F)

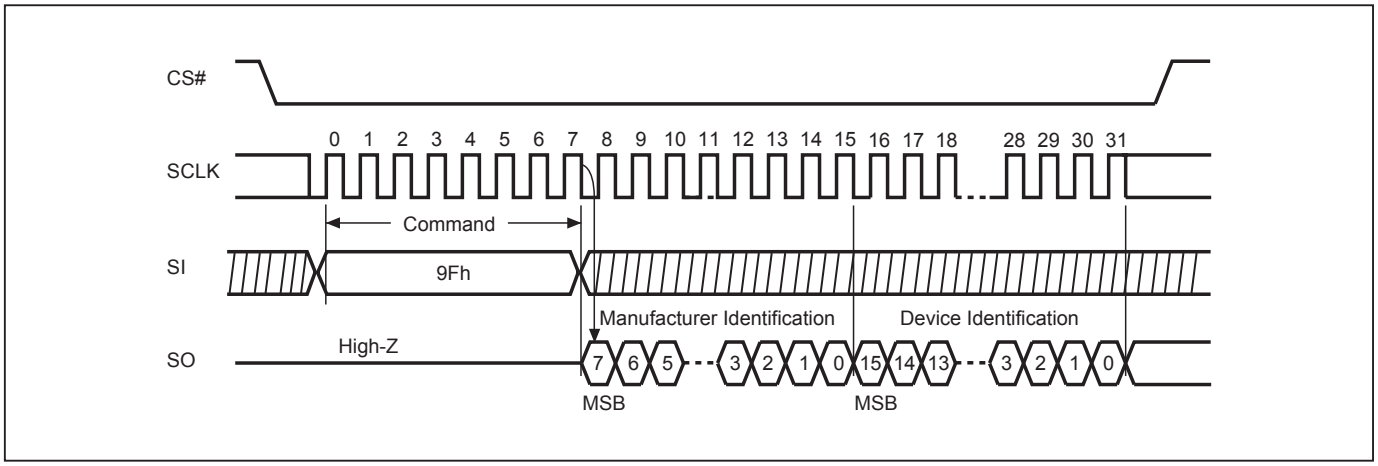

Figure 18. Read Status Register (RDSR) Sequence (Command 05)

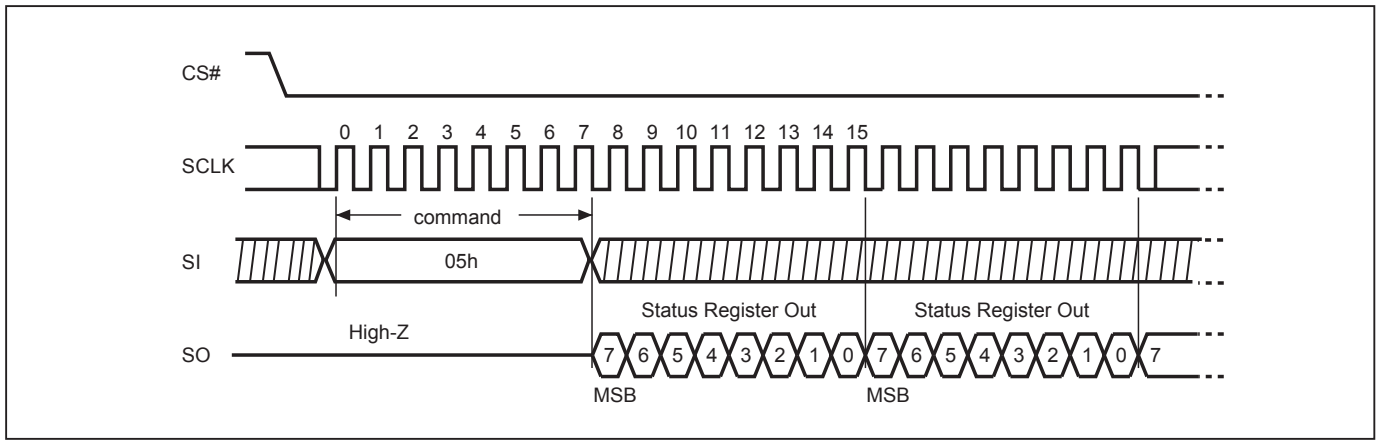

Figure 19. Write Status Register (WRSR) Sequence (Command 01)

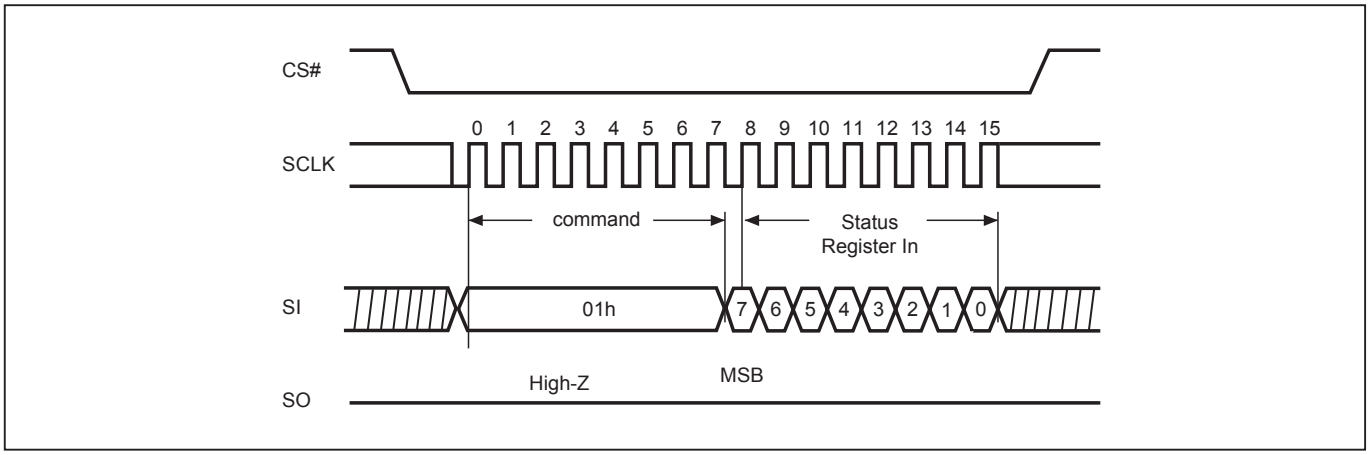

Figure 20. Read Data Bytes (READ) Sequence (Command 03) (50MHz)

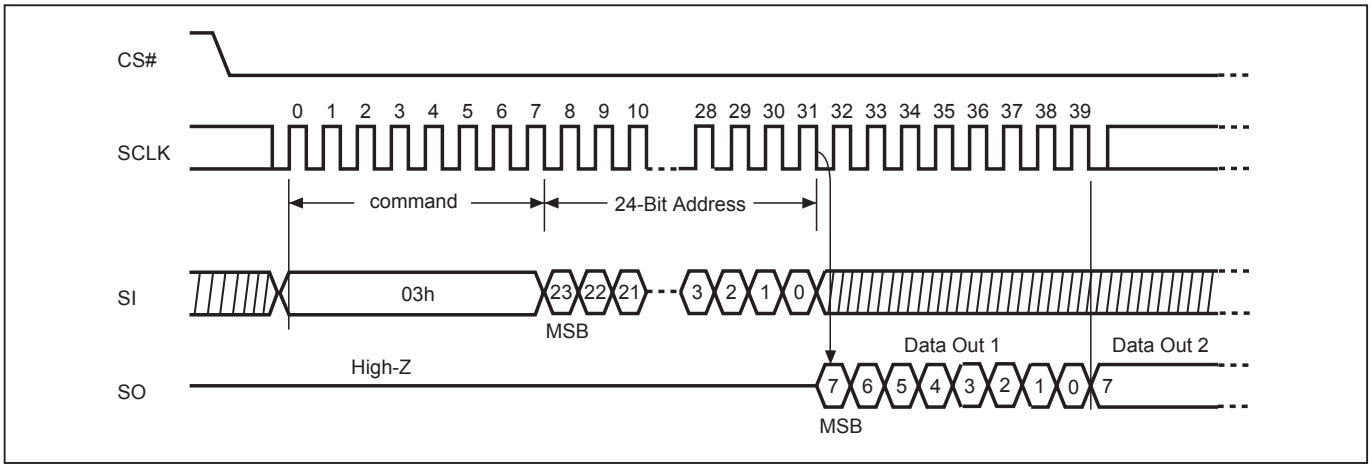

Figure 21. Read at Higher Speed (FAST_READ) Sequence (Command 0B)

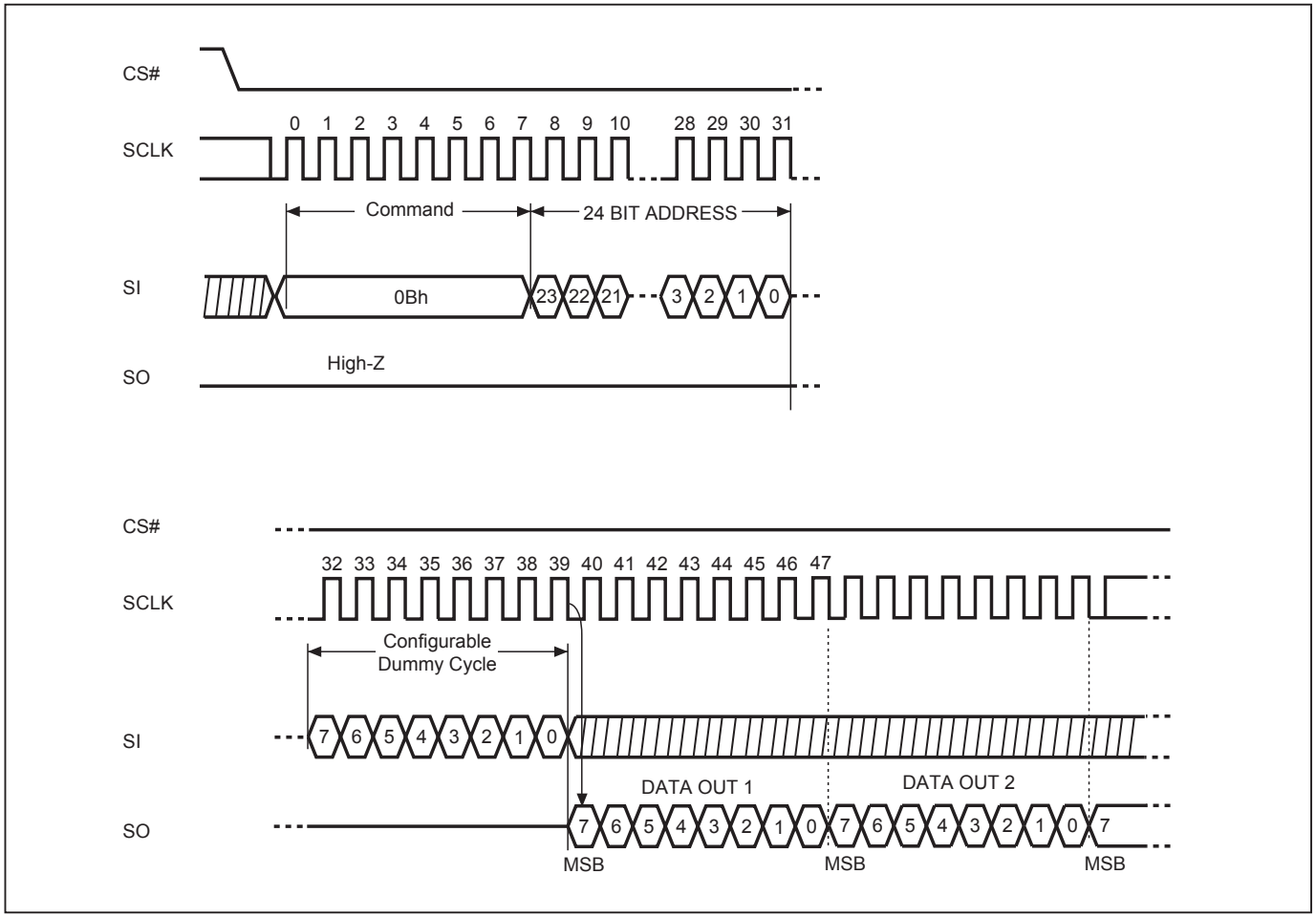

Figure 22. Dual Read Mode Sequence (Command 3B)

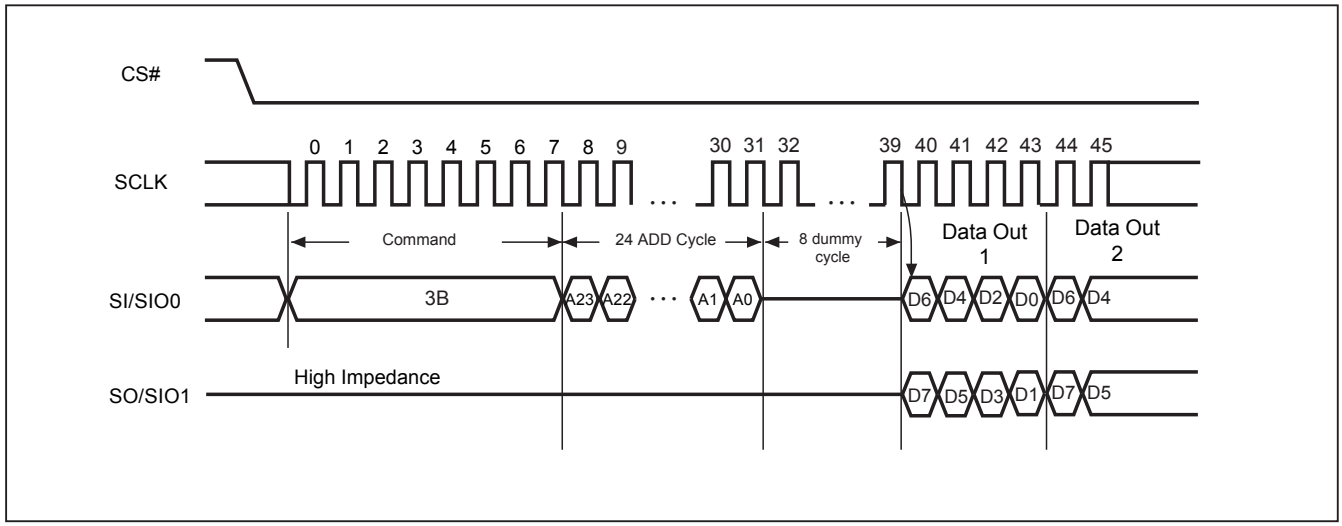

Figure 23. 2 x I/O Read Mode Sequence (Command BB)

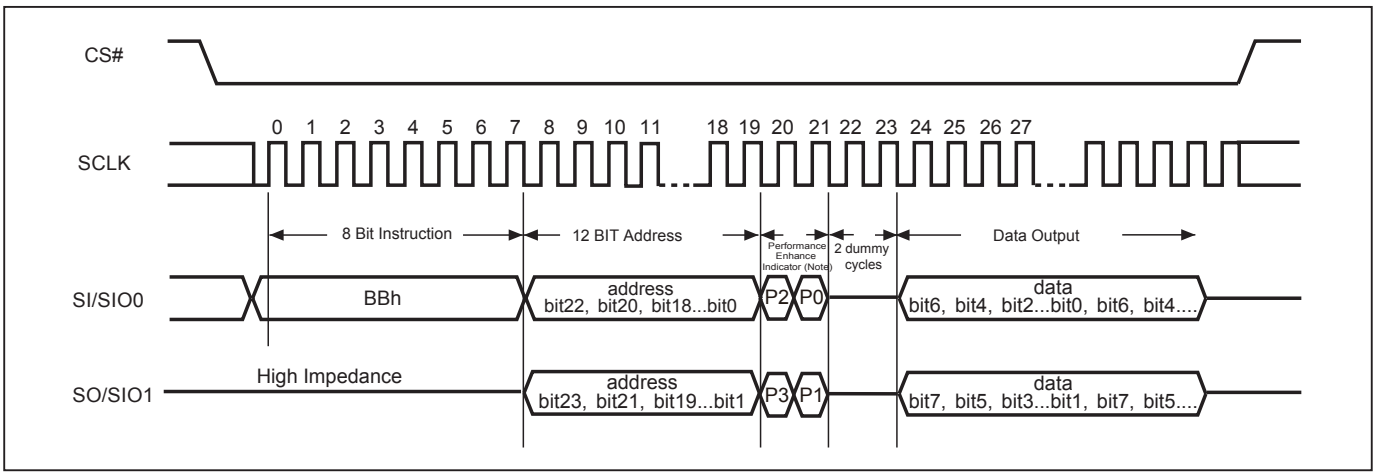

Notes:

1. Hi-impedance is inhibited for the two clock cycles.
2. P3≠P1 & P2≠P0 (Toggling) is inhibited.

Figure 24. 4 x I/O Read Mode Sequence (Command EB)

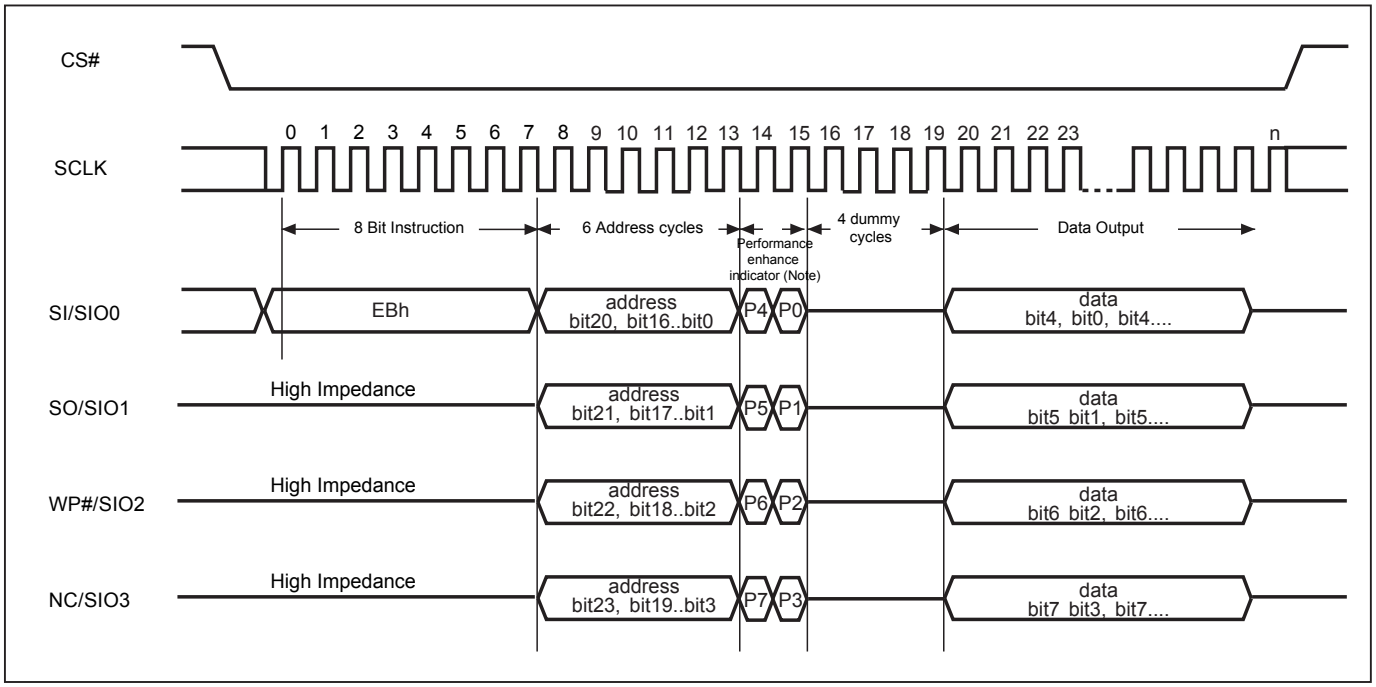

Notes:

1. Hi-impedance is inhibited for the two clock cycles.
2. P7≠P3, P6≠P2, P5≠P1 & P4≠P0 (Toggling) is inhibited.

Figure 25. 2 x I/O Read Enhance Performance Mode Sequence (Command BB)

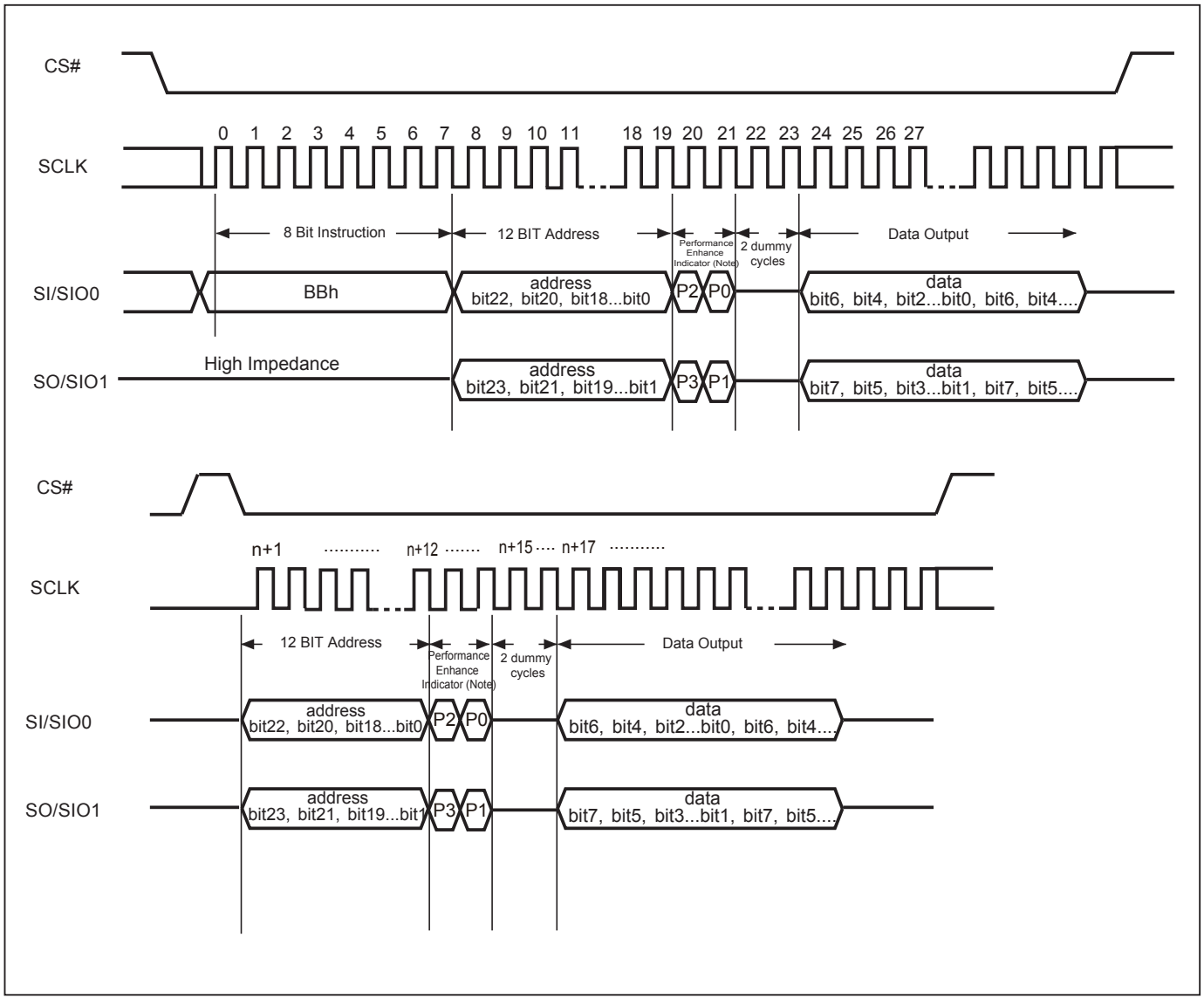

Notes:

1. Performance enhance mode, if P3≠P1 & P2≠P0 (Toggling), ex: 21h, 12h, 30h or 03h.
   Performance enhance recommend to keep 1 or 0 in performance enhance indicator.
2. Reset the performance enhance mode, if P3=P1 or P2=P0 (Not Toggling), ex: 33h, 00h, 22h or 11h.

Figure 26. 4 x I/O Read Enhance Performance Mode Sequence (Command EB)

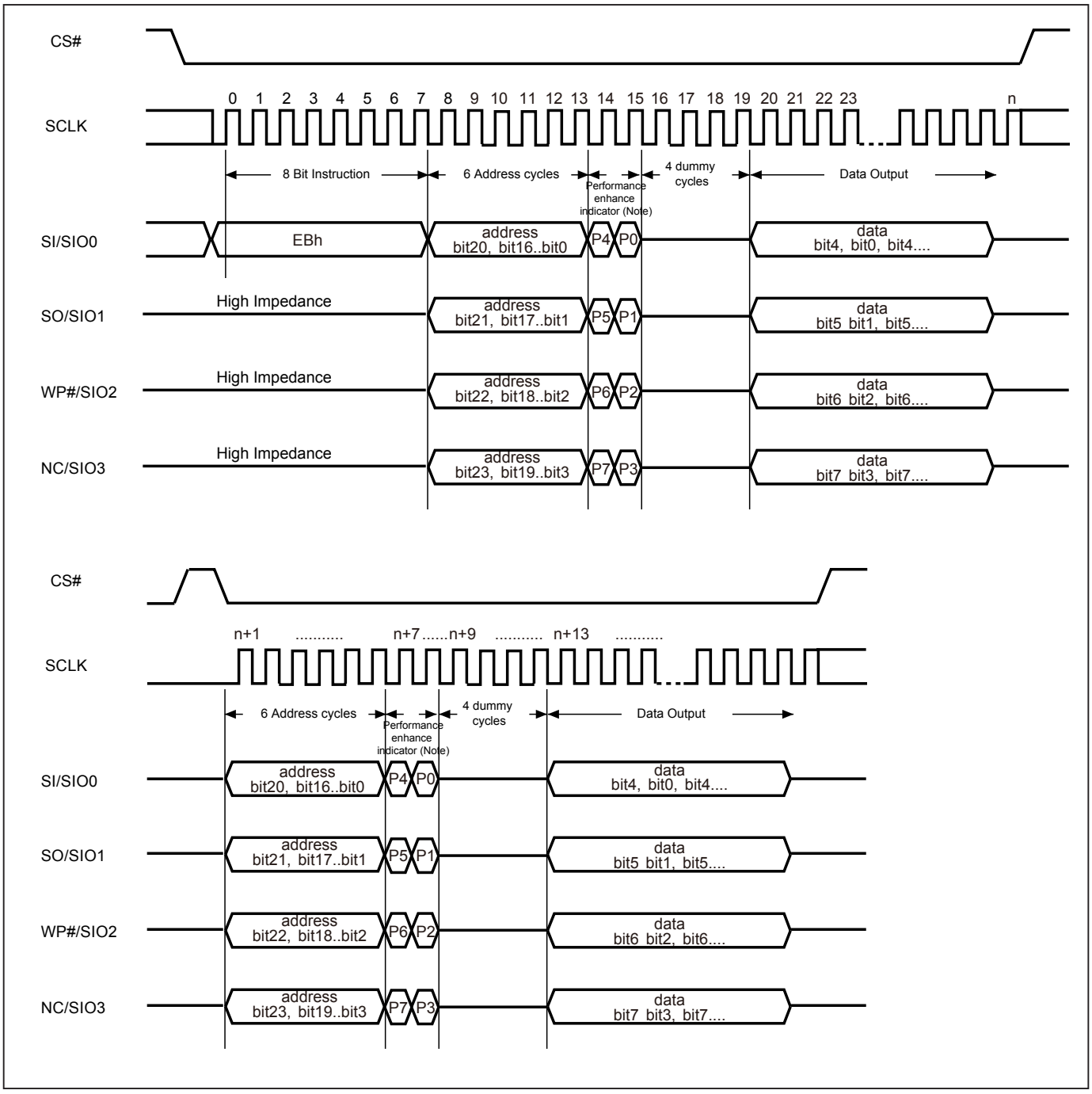

Notes:

1. Performance enhance mode, if P7≠P3 & P6≠P2 & P5≠P1 & P4≠P0 (Toggling), ex: A5h, 5Ah, 0Fh, F0h. Performance enhance recommend to keep 1 or 0 in performance enhance indicator.
2. Reset the performance enhance mode, if P7=P3 or P6=P2 or P5=P1 or P4=P0 (Not Toggling), ex: AAh, 55h, 00h, FFh.

Figure 27. Page Program (PP) Sequence (Command 02)

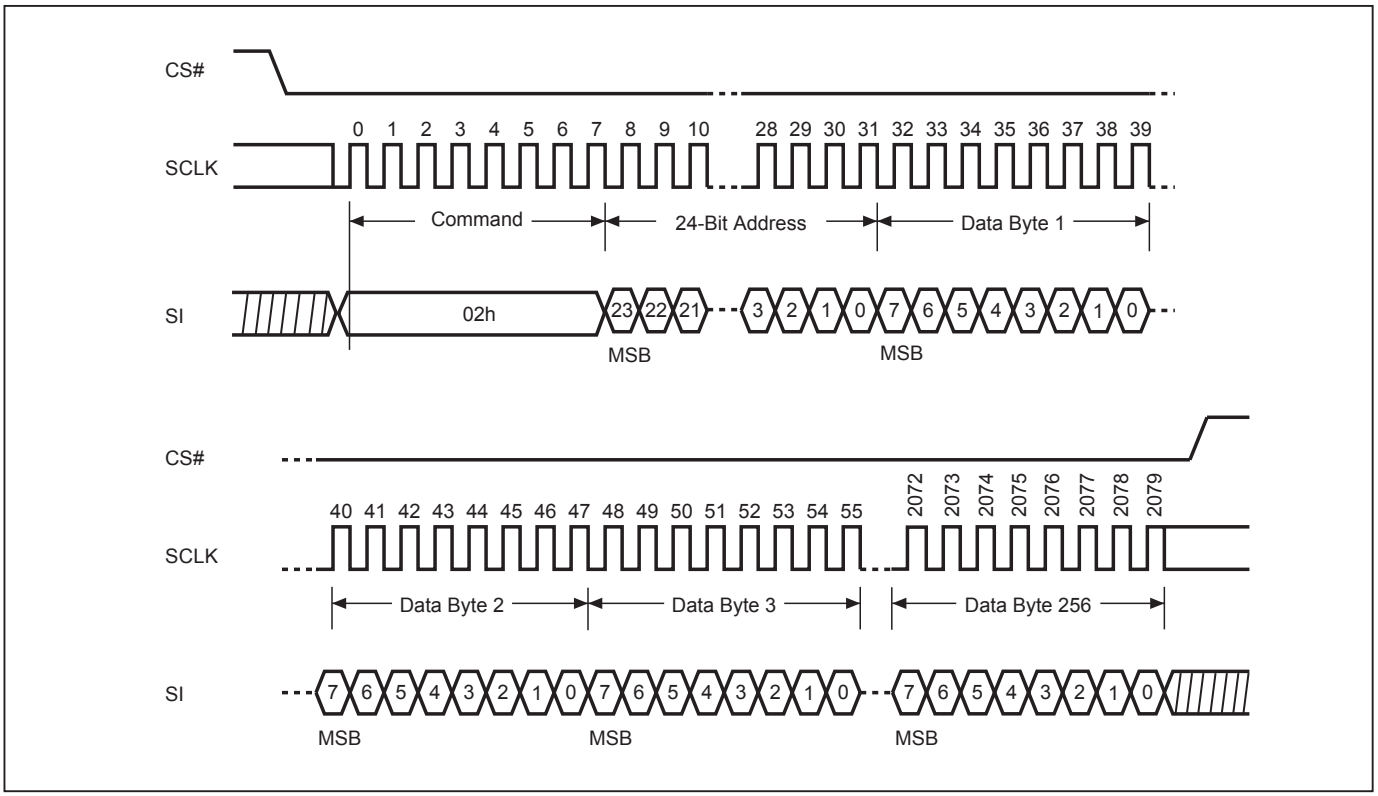

Figure 28. 4 x I/O Page Program (4PP) Sequence (Command 38)

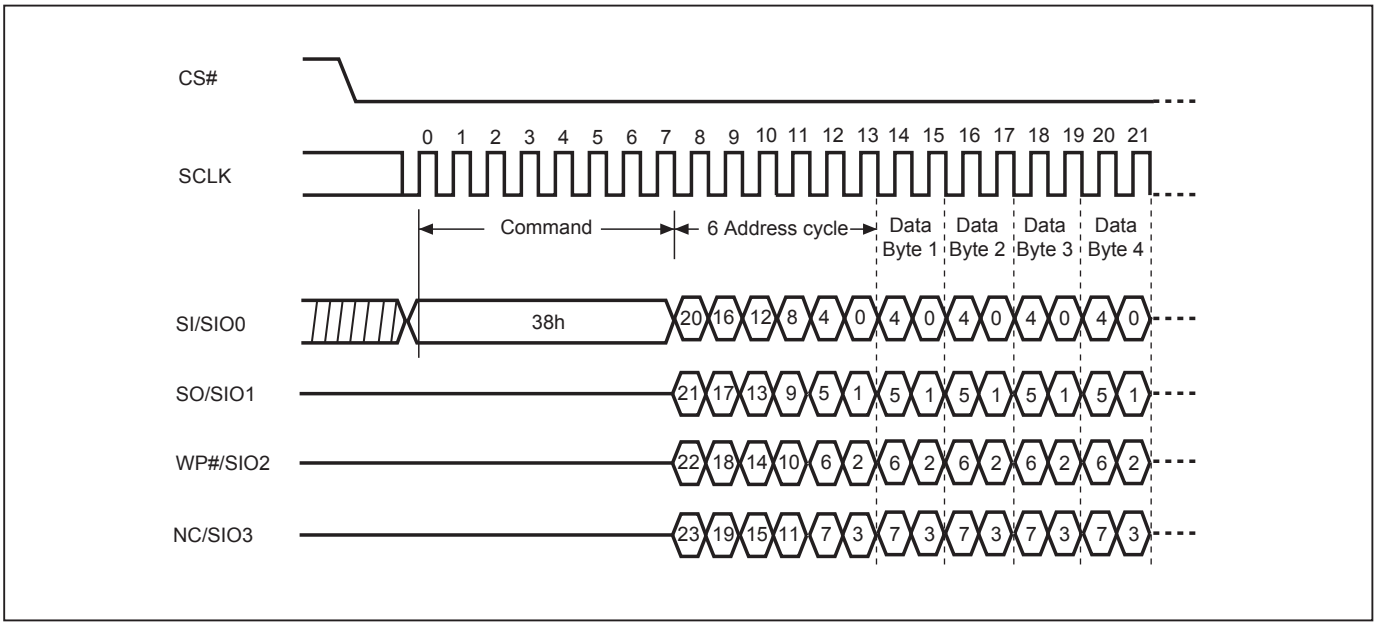

Figure 29. Sector Erase (SE) Sequence (Command 20)

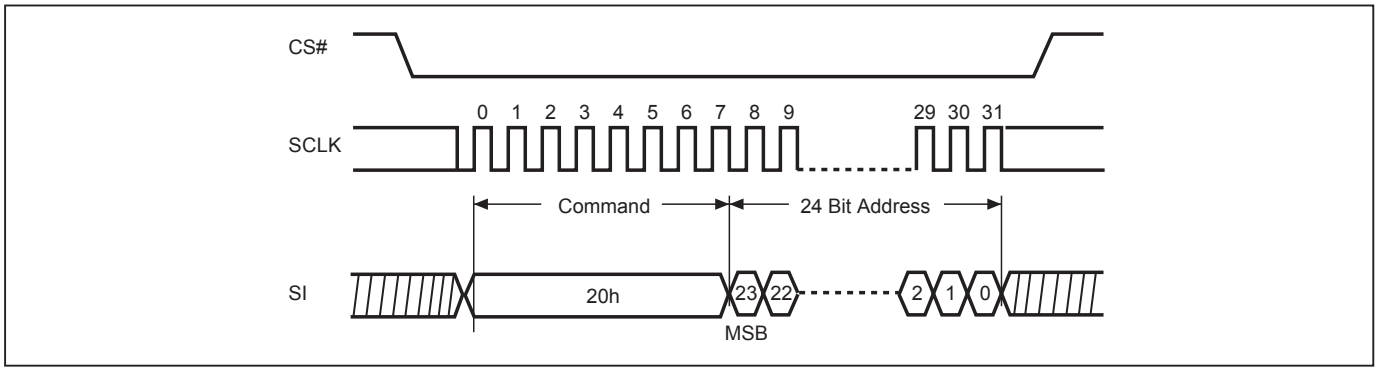

Figure 30. Block Erase 32KB (BE32K) Sequence (Command 52)

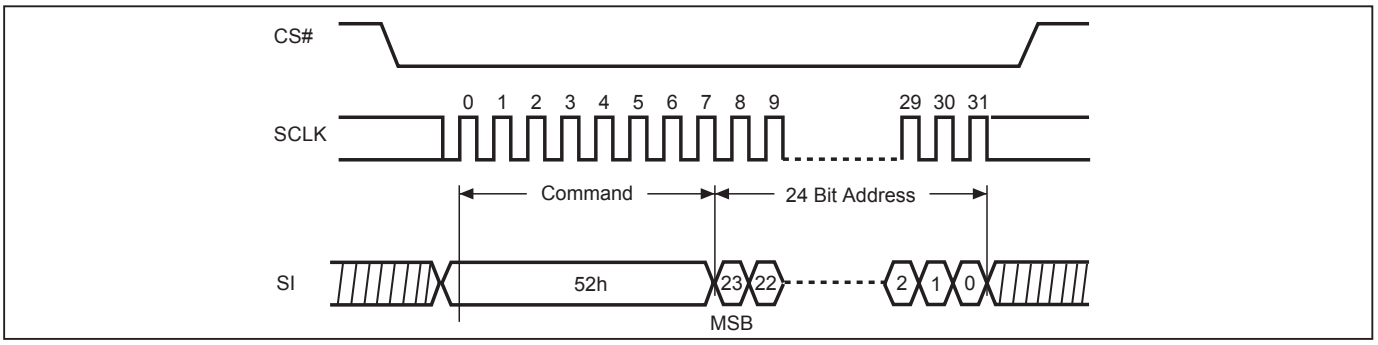

Figure 31. Block Erase (BE) Sequence (Command D8)

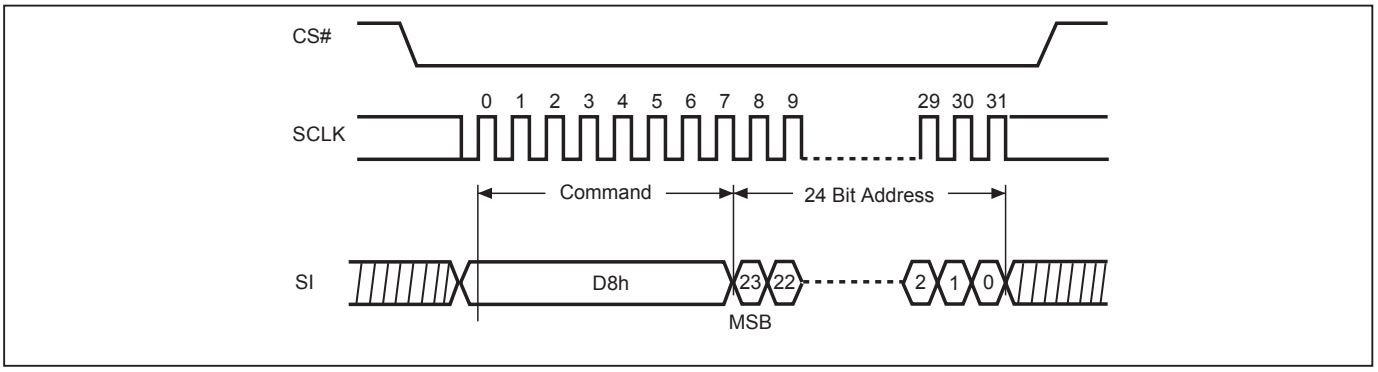

Figure 32. Chip Erase (CE) Sequence (Command 60 or C7)

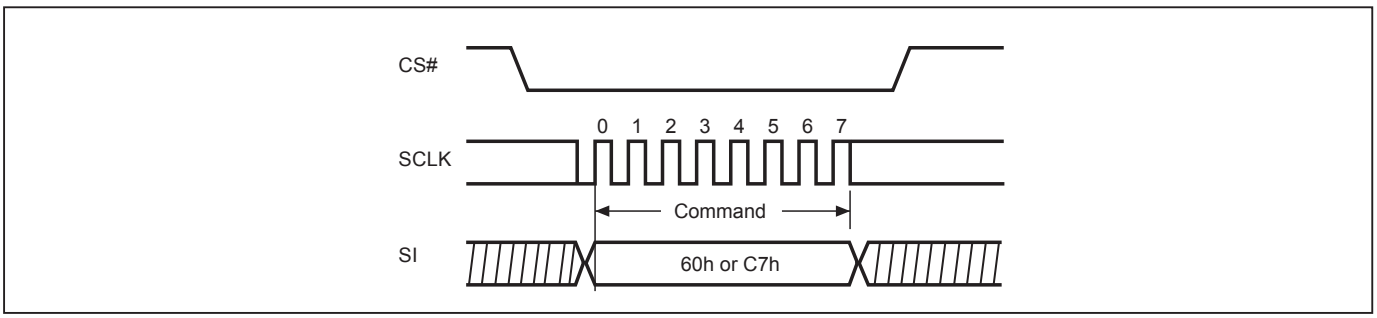

Figure 33. Deep Power-down (DP) Sequence (Command B9)

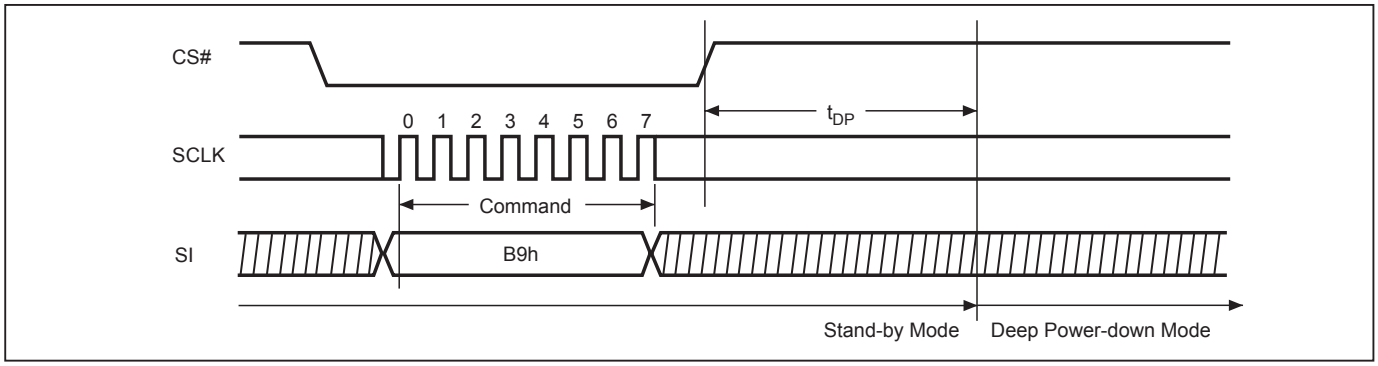

Figure 34. Release from Deep Power-down and Read Electronic Signature (RES) Sequence (Command AB)

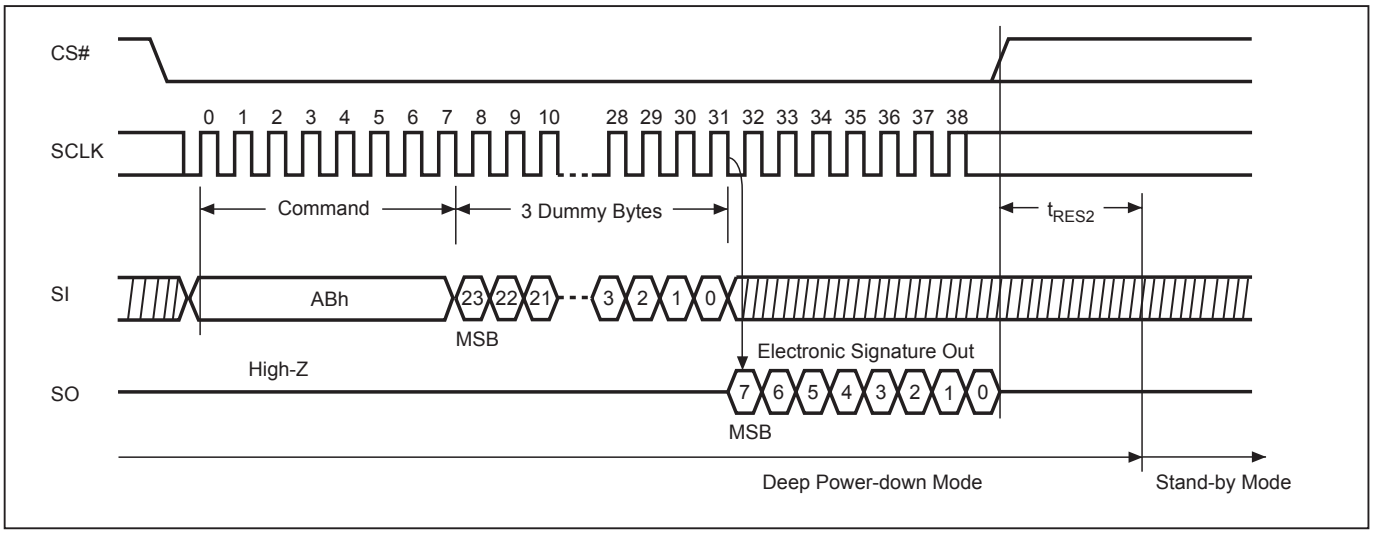

Figure 35. Release from Deep Power-down (RDP) Sequence (Command AB)

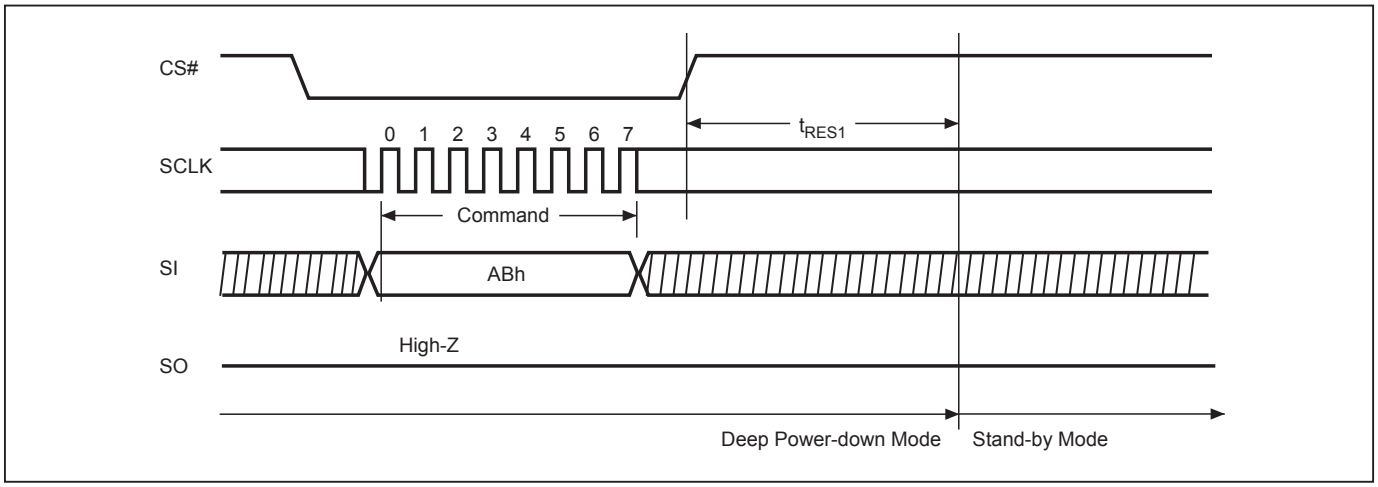

Figure 36. Read Electronic Manufacturer & Device ID (REMS) Sequence (Command 90/EF/DF)

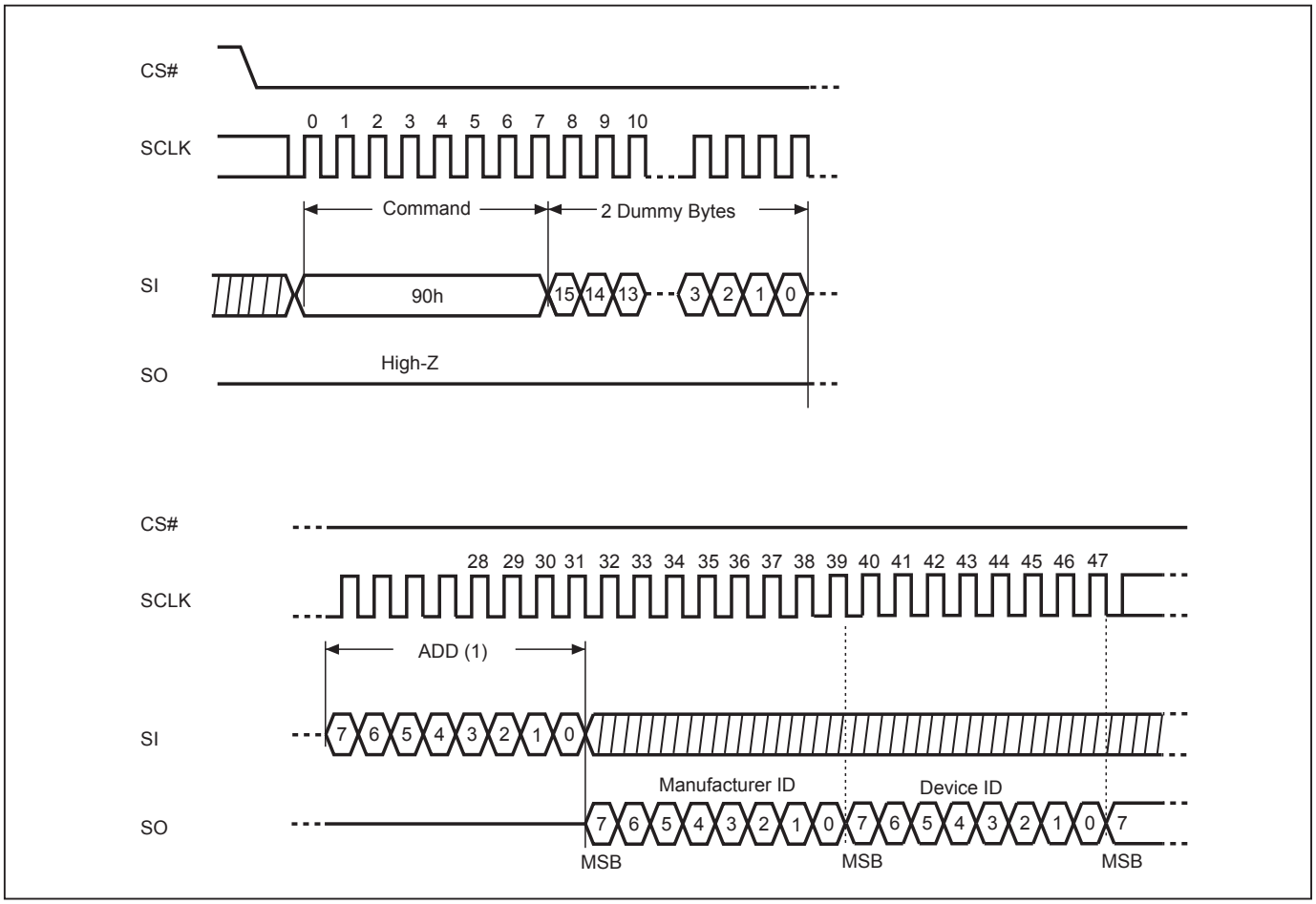

Note: ADD=00H will output the manufacturer's ID first and ADD=01H will output device ID first.

Figure 37. Read Security Register (RDSCUR) Sequence (Command 2B)

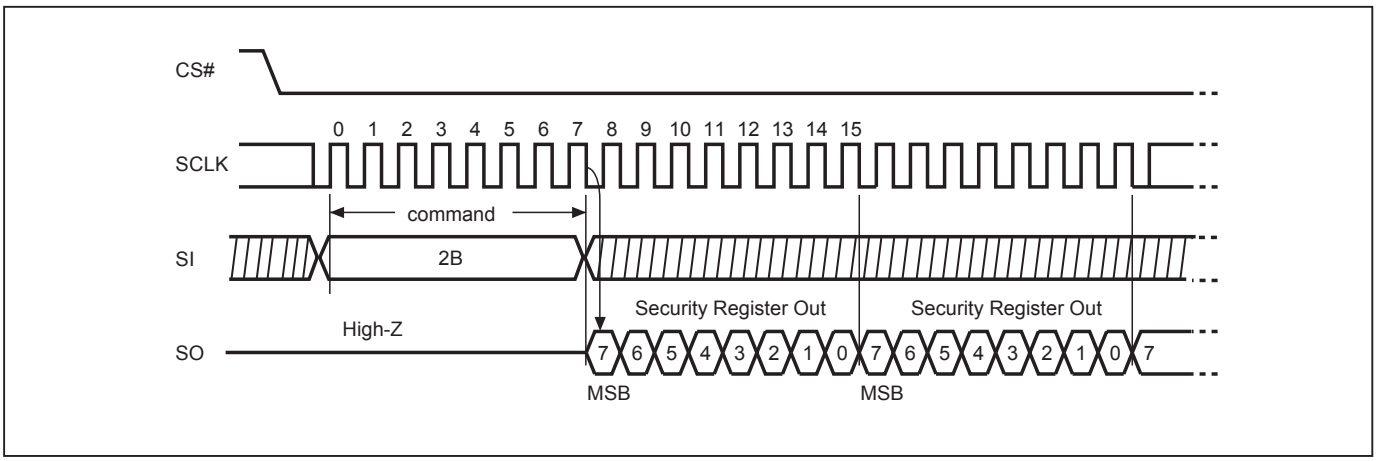

Figure 38. Write Security Register (WRSCUR) Sequence (Command 2F)

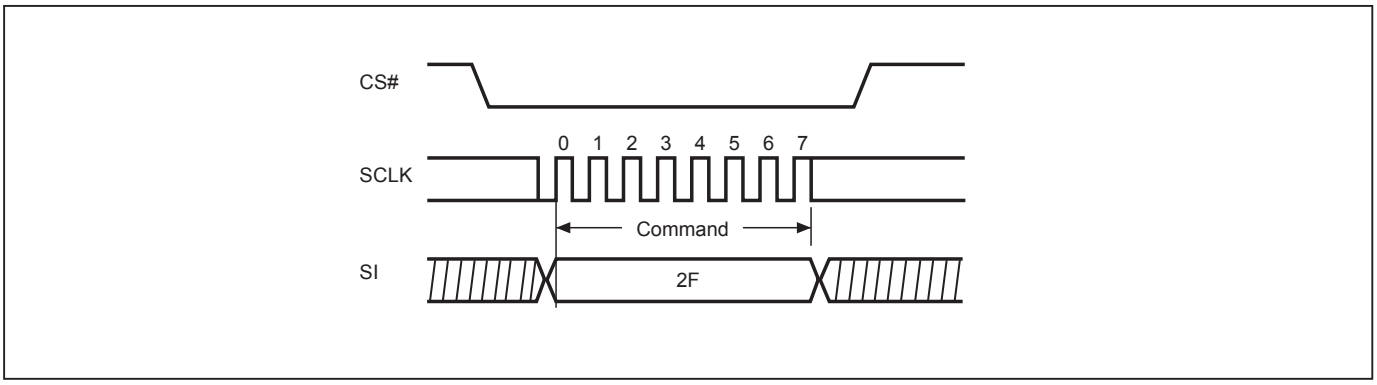

Figure 39. Power-up Timing

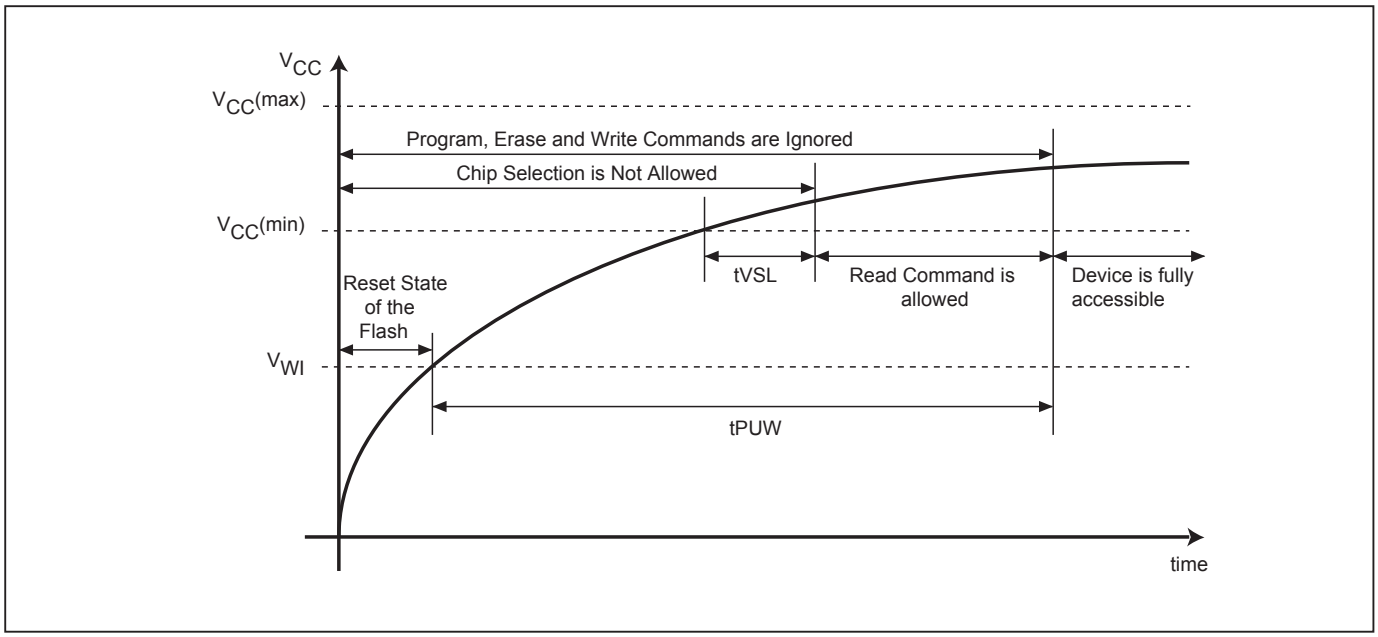

Note: VCC (max.) is 2.0V and VCC (min.) is 1.65V.

Table 15. Power-Up Timing and VWI Threshold

Symbol	Parameter	Min.	Max.	Unit
tVSL(1)	VCC(min) to CS# low (VCC Rise Time)	300		us
tPUW(1)	Time delay to Write instruction	1	10	ms
VWI(1)	Command Inhibit Voltage	1.0	1.4	V

Note: 1. These parameters are characterized only.

INITIAL DELIVERY STATE

The device is delivered with the memory array erased: all bits are set to 1 (each byte contains FFh). The Status Register contains 00h (all Status Register bits are 0).

OPERATING CONDITIONS

At Device Power-Up and Power-Down

AC timing illustrated in *Figure 40* and *Figure 41* are for the supply voltages and the control signals at device power-up and power-down. If the timing in the figures is ignored, the device will not operate correctly.

During power-up and power-down, CS# needs to follow the voltage applied on VCC to keep the device not to be selected. The CS# can be driven low when VCC reach Vcc(min.) and wait a period of tVSL.

Figure 40. AC Timing at Device Power-Up

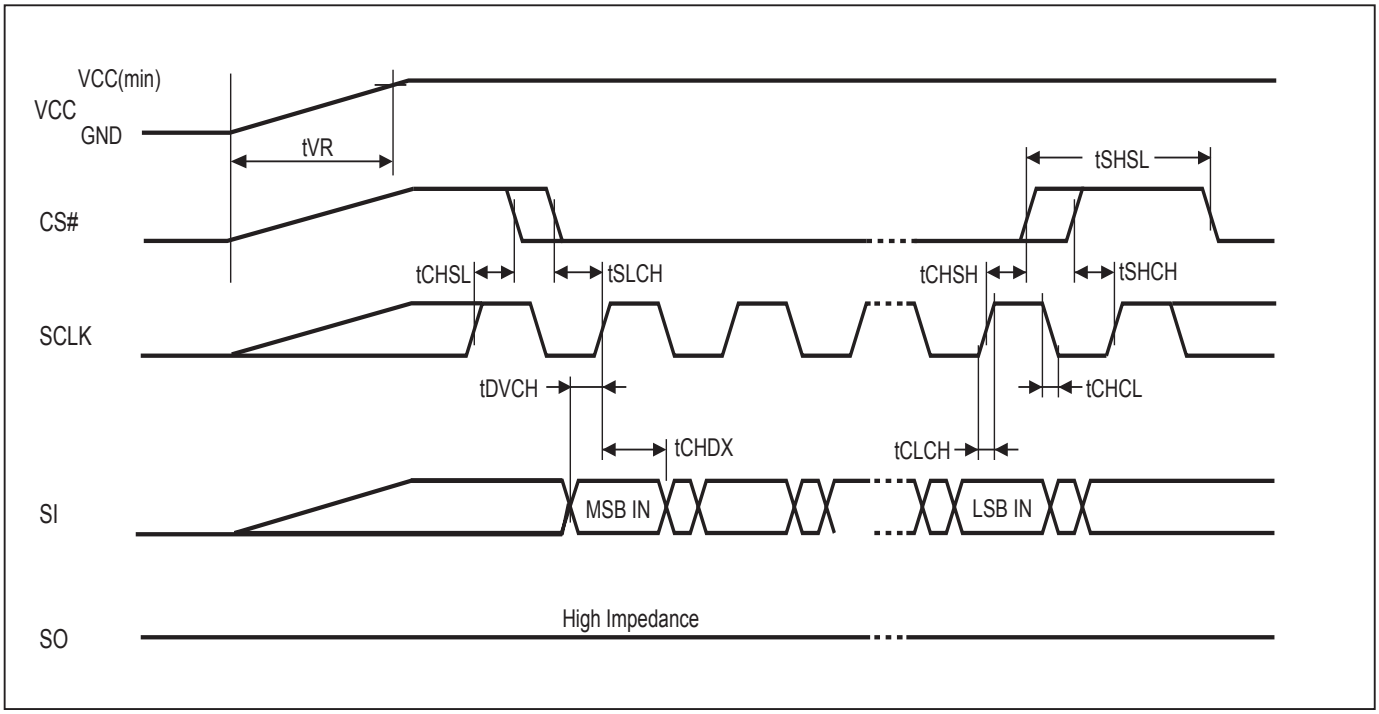

Symbol	Parameter	Notes	Min.	Max.	Unit
tVR	VCC Rise Time	1	20	500000	us/V

Notes :
1. Sampled, not 100% tested.
2. For AC spec tCHSL, tSLCH, tDVCH, tCHDX, tSHSL, tCHSH, tSHCH, tCHCL, tCLCH in the figure, please refer to "AC CHARACTERISTICS" table.

Figure 41. Power-Down Sequence

During power-down, CS# needs to follow the voltage drop on VCC to avoid mis-operation.

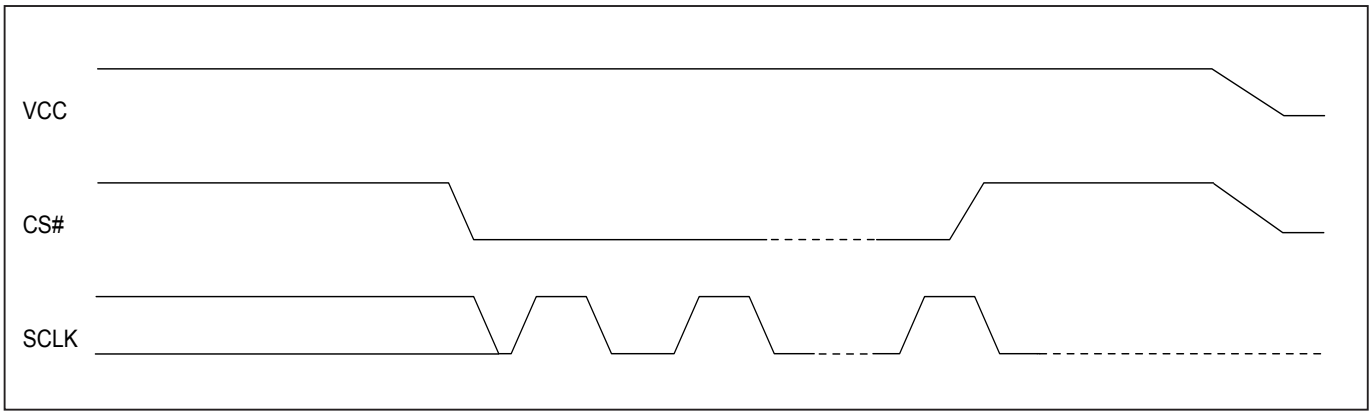

ERASE AND PROGRAMMING PERFORMANCE

Parameter	Min.	Typ. (1)	Max. (2)	Unit
Write Status Register Cycle Time			40	ms
Sector Erase Cycle Time (4KB)		60	200	ms
Block Erase Cycle Time (32KB)		250	1000	ms
Block Erase Cycle Time (64KB)		500	2000	ms
Chip Erase Cycle Time		5	10	s
Byte Program Time (via page program command)		15	30	us
Page Program Time		1.2	3	ms
Erase/Program Cycle		100,000		cycles

Note:
1. Typical program and erase time assumes the following conditions: 25°C, 1.8V, and checker board pattern.
2. Under worst conditions of 85°C and 1.65V.
3. System-level overhead is the time required to execute the first-bus-cycle sequence for the programming command.

DATA RETENTION

Parameter	Condition	Min.	Max.	Unit
Data retention	55˚C	20		years

LATCH-UP CHARACTERISTICS

	MIN.	MAX.
Input Voltage with respect to GND on all power pins, SI, CS#	-1.0V	2 VCCmax
Input Voltage with respect to GND on SO	-1.0V	VCC + 1.0V
Current	-100mA	+100mA
Includes all pins except VCC. Test conditions: VCC = 1.8V, one pin at a time.		

ORDERING INFORMATION

PART NO.	CLOCK (MHz)	TEMPERATURE	PACKAGE	Remark
MX25U8033EM1I-12G	80	-40°C~85°C	8-SOP (150mil)	
MX25U8033EZUI-12G	80	-40°C~85°C	8-USON (4x4mm)	
MX25U8033EZNI-12G	80	-40°C~85°C	8-WSON (6x5mm)	
MX25U8033EM2I-12G	80	-40°C~85°C	8-SOP (200mil)	

PART NAME DESCRIPTION

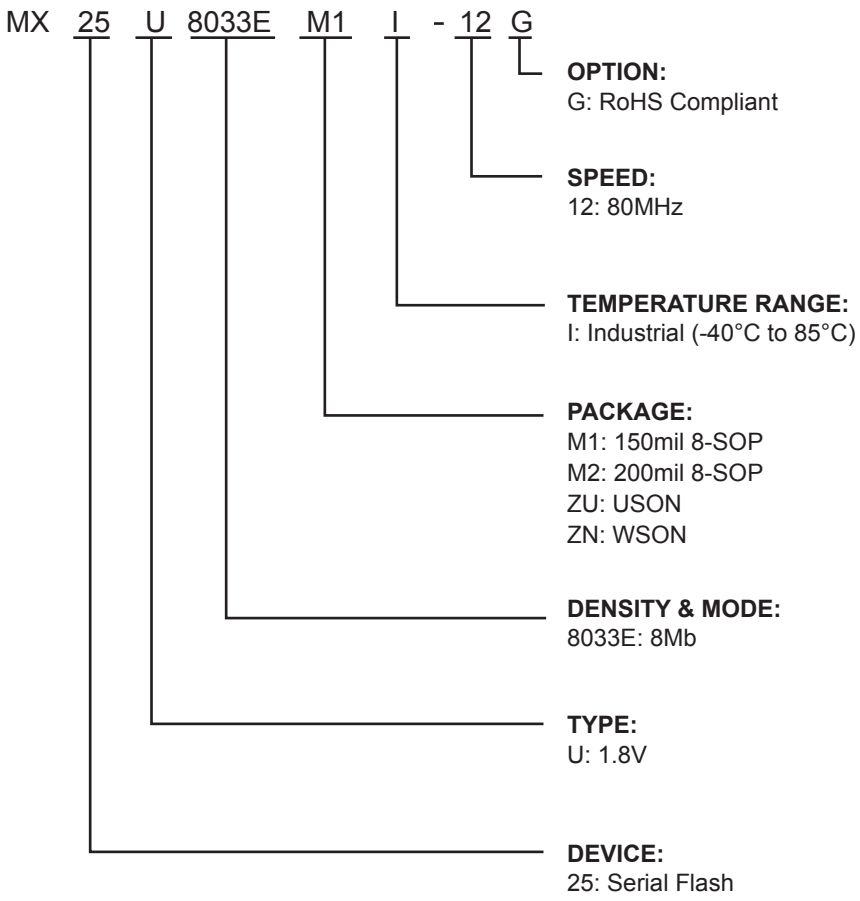

PACKAGE INFORMATION

Doe. Title: Package Outline for SOP 8L (150MIL)

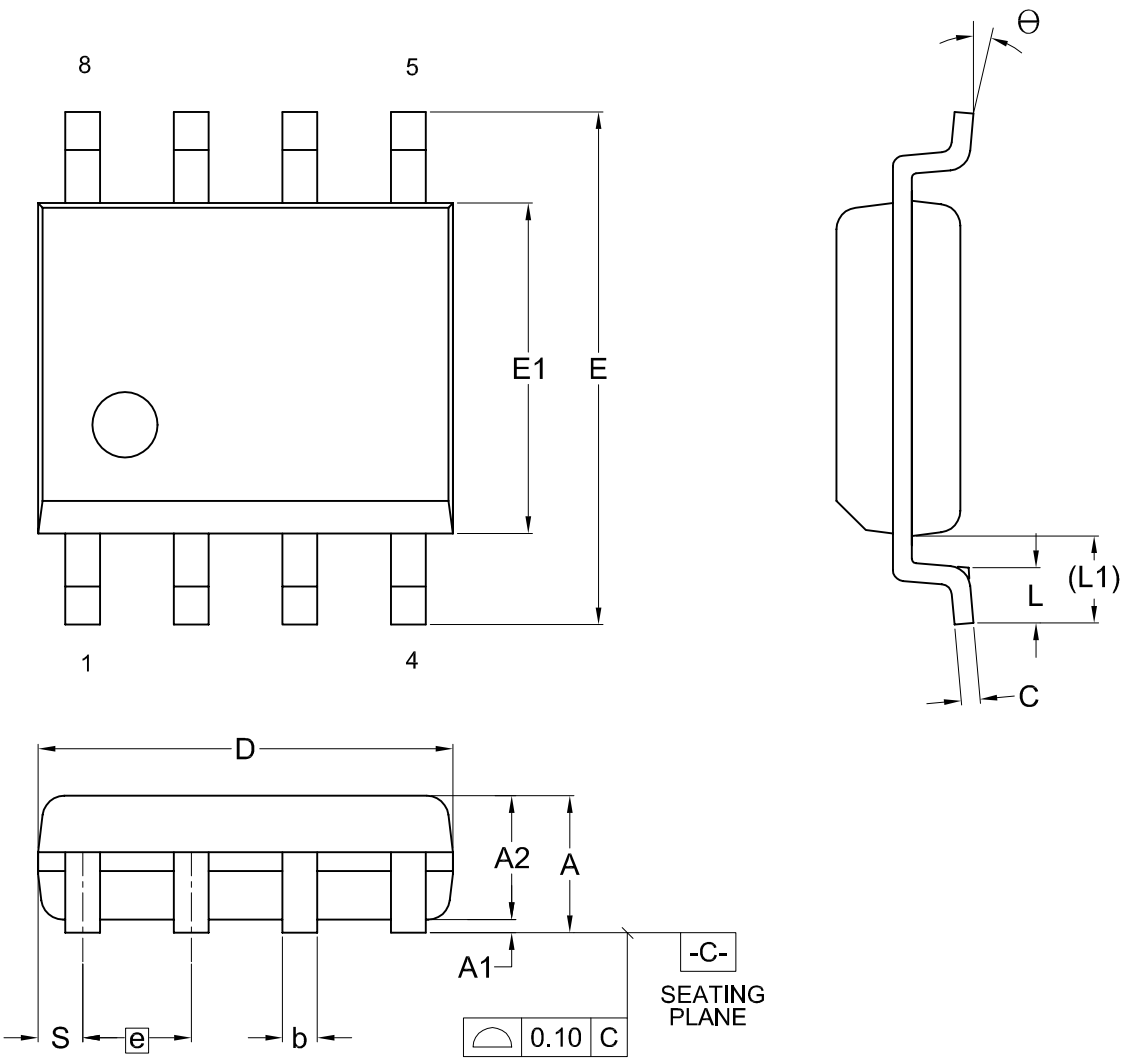

Dimensions (inch dimensions are derived from the original mm dimensions)

SYMBOL / UNIT		A	A1	A2	b	C	D	E	E1	e	L	L1	S	Θ
mm	Min.	---	0.10	1.35	0.36	0.15	4.77	5.80	3.80		0.46	0.85	0.41	0
	Nom.	---	0.15	1.45	0.41	0.20	4.90	5.99	3.90	1.27	0.66	1.05	0.54	5
	Max.	1.75	0.20	1.55	0.51	0.25	5.03	6.20	4.00		0.86	1.25	0.67	8
Inch	Min.	---	0.004	0.053	0.014	0.006	0.188	0.228	0.150		0.018	0.033	0.016	0
	Nom.	---	0.006	0.057	0.016	0.008	0.193	0.236	0.154	0.050	0.026	0.041	0.021	5
	Max.	0.069	0.008	0.061	0.020	0.010	0.198	0.244	0.158		0.034	0.049	0.026	8

Dwg. No.	Revision	Reference			
		JEDEC	EIAJ		
6110-1401	7	MS-012			

Doc. Title: Package Outline for SOP 8L 200MIL (official name - 209MIL)

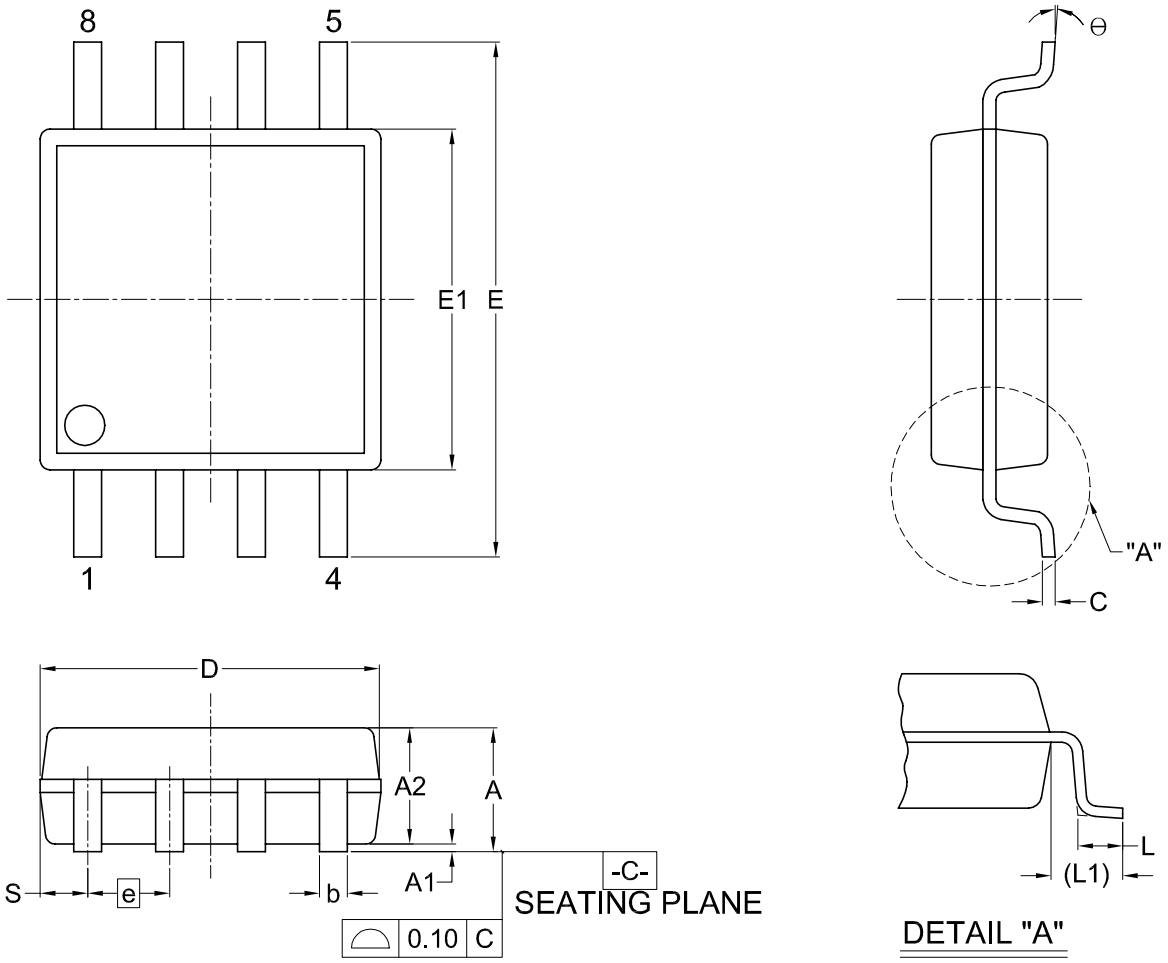

Dimensions (inch dimensions are derived from the original mm dimensions)

SYMBOL / UNIT		A	A1	A2	b	C	D	E	E1	e	L	L1	S	θ
mm	Min.	—	0.05	1.70	0.36	0.19	5.13	7.70	5.18	---	0.50	1.21	0.62	0
	Nom.	---	0.15	1.80	0.41	0.20	5.23	7.90	5.28	1.27	0.65	1.31	0.74	5
	Max.	2.16	0.20	1.91	0.51	0.25	5.33	8.10	5.38	---	0.80	1.41	0.88	8
Inch	Min.	---	0.002	0.067	0.014	0.007	0.202	0.303	0.204	---	0.020	0.048	0.024	0
	Nom.	—	0.006	0.071	0.016	0.008	0.206	0.311	0.208	0.050	0.026	0.052	0.029	5
	Max.	0.085	0.008	0.075	0.020	0.010	0.210	0.319	0.212	---	0.031	0.056	0.035	8

Dwg. No.	Revision	Reference			
		JEDEC	EIAJ		
6110-1406	3				

Doc. Title: Package Outline for WSON 8L (6x5x0.8MM, LEAD PITCH 1.27MM)

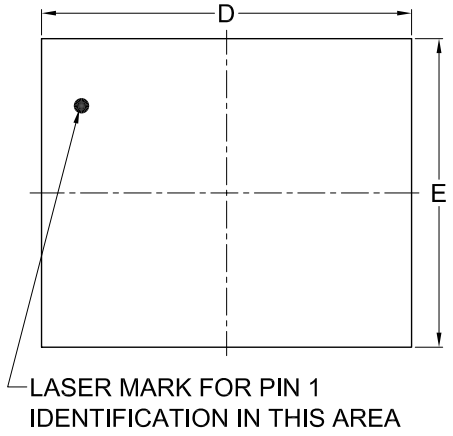

TOP VIEW

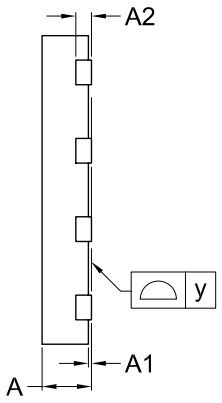

SIDE VIEW

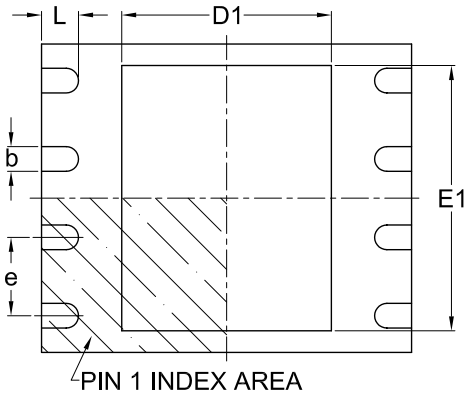

BOTTOM VIEW

Note:

This package has an exposed metal pad underneath the package. It is recommended to leave the metal pad floating or to connect it to the same ground as the GND pin of the package. Do not connect the metal pad to any other voltage or signal line on the PCB. Avoid placing vias or traces underneath the metal pad. Connection of this metal pad to any other voltage or signal line can result in shorts and/or electrical malfunction of the device.

Dimensions (inch dimensions are derived from the original mm dimensions)

SYMBOL / UNIT		A	A1	A2	b	D	D1	E	E1	L	e	y
mm	Min.	0.70	---	---	0.35	5.90	3.30	4.90	3.90	0.50	---	0.00
	Nom.	---	---	0.20	0.40	6.00	3.40	5.00	4.00	0.60	1.27	---
	Max.	0.80	0.05	---	0.48	6.10	3.50	5.10	4.10	0.75	---	0.08
Inch	Min.	0.028	---	---	0.014	0.232	0.129	0.193	0.154	0.020	---	0.00
	Nom.	---	---	0.008	0.016	0.236	0.134	0.197	0.157	0.024	0.05	---
	Max.	0.032	0.002	---	0.019	0.240	0.138	0.201	0.161	0.030	---	0.003

Dwg. No.	Revision	Reference			
		JEDEC	EIAJ		
6110-3401	6	MO-220			

Doc. Title: Package Outline for USON 8L (4x4x0.6MM, LEAD PITCH 0.8MM)

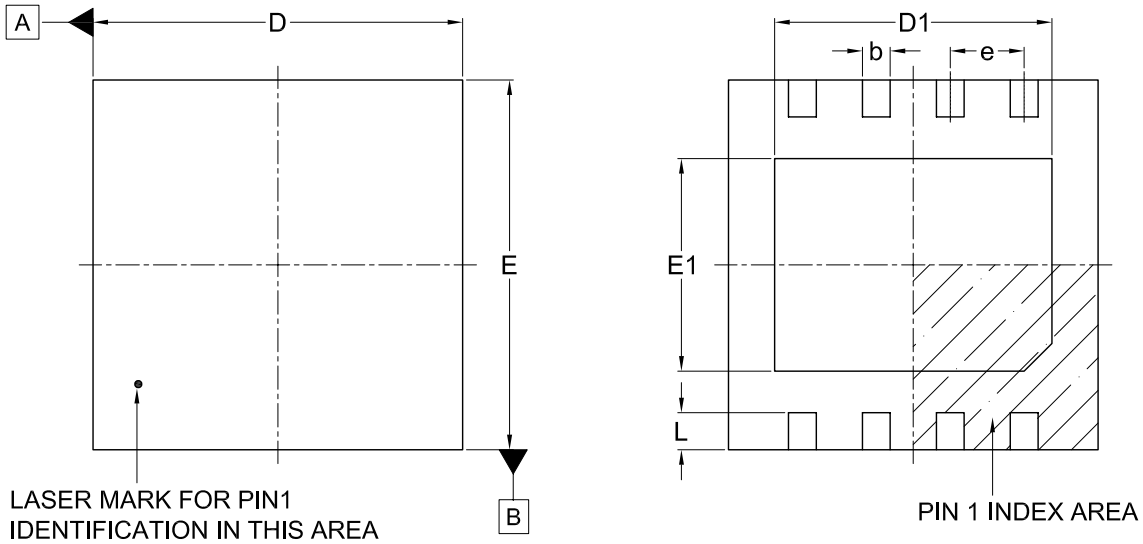

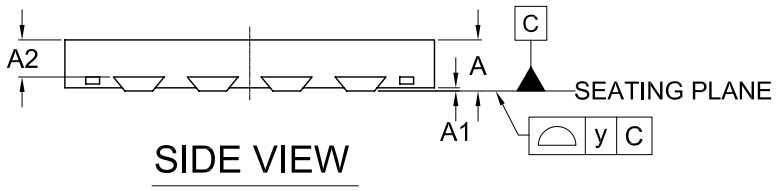

Note:

This package has an exposed metal pad underneath the package. It is recommended to leave the metal pad floating or to connect it to the same ground as the GND pin of the package. Do not connect the metal pad to any other voltage or signal line on the PCB. Avoid placing vias or traces underneath the metal pad. Connection of this metal pad to any other voltage or signal line can result in shorts and/or electrical malfunction of the device.

Dimensions (inch dimensions are derived from the original mm dimensions)

SYMBOL / UNIT		A	A1	A2	b	D	D1	E	E1	L	e	y
mm	Min.	0.50	---	---	0.25	3.90	2.90	3.90	2.20	0.35	---	0.00
	Nom.	0.55	0.04	0.40	0.30	4.00	3.00	4.00	2.30	0.40	0.80	---
	Max.	0.60	0.05	0.43	0.35	4.10	3.10	4.10	2.40	0.45	---	0.08
Inch	Min.	0.020	---	---	0.010	0.154	0.114	0.154	0.087	0.014	---	0.00
	Nom.	0.022	0.002	0.016	0.011	0.157	0.118	0.157	0.091	0.016	0.031	---
	Max.	0.024	0.002	0.017	0.014	0.161	0.122	0.161	0.094	0.018	---	0.003

Dwg. No.	Revision	Reference			
		JEDEC	EIAJ		
6110-3601	5	MO-252			

REVISION HISTORY

Rev. No.	Descriptions	Page	Date
1.0	1. Added 200mil 8SOP Package solution 2. Modified Order Information format	P3,5,54,55,57 P54	NOV/09/2011
1.1	1. Removed Advanced Information from Ordering Information	P54	DEC/27/2011
1.2	1. Added SFDP content	P12,32~37,42	MAR/20/2012
1.3	1. Added DREAD function 2. Modified SFDP wording	P13,15,23,37,38,50 P35~40	APR/15/2013

Except for customized products which has been expressly identified in the applicable agreement, Macronix's products are designed, developed, and/or manufactured for ordinary business, industrial, personal, and/or household applications only, and not for use in any applications which may, directly or indirectly, cause death, personal injury, or severe property damages. In the event Macronix products are used in contradicted to their target usage above, the buyer shall take any and all actions to ensure said Macronix's product qualified for its actual use in accordance with the applicable laws and regulations; and Macronix as well as it's suppliers and/or distributors shall be released from any and all liability arisen therefrom.

Copyright© Macronix International Co., Ltd. 2011~2013. All rights reserved, including the trademarks and tradename thereof, such as Macronix, MXIC, MXIC Logo, MX Logo, Integrated Solutions Provider, NBit, Nbit, NBiit, Macronix NBit, eLiteFlash, HybridNVM, HybridFlash, XtraROM, Phines, KH Logo, BE-SONOS, KSMC, Kingtech, MXSMIO, Macronix vEE, Macronix MAP, Rich Audio, Rich Book, Rich TV, and FitCAM. The names and brands of third party referred thereto (if any) are for identification purposes only.

For the contact and order information, please visit Macronix's Web site at: http://www.macronix.com