MX25L25645G

3V, 256M-BIT [x 1/x 2/x 4]
CMOS MXSMIO® (SERIAL MULTI I/O)
FLASH MEMORY

Contents

1. FEATURES 4
2. GENERAL DESCRIPTION 6
Table 1. Read performance Comparison 6
3. PIN CONFIGURATIONS 7
4. PIN DESCRIPTION 7
5. BLOCK DIAGRAM 8
6. DATA PROTECTION 9
Table 2. Protected Area Sizes 10
Table 3. 4K-bit Secured OTP Definition 11
7. Memory Organization 12
Table 4. Memory Organization 12
8. DEVICE OPERATION 13
8-1. 256Mb Address Protocol 15
8-2. Quad Peripheral Interface (QPI) Read Mode 16
9. COMMAND DESCRIPTION 17
Table 5. Command Set 17
9-1. Write Enable (WREN) 22
9-2. Write Disable (WRDI) 23
9-3. Read Identification (RDID) 24
9-4. Release from Deep Power-down (RDP), Read Electronic Signature (RES) 25
9-5. Read Electronic Manufacturer ID & Device ID (REMS) 27
9-6. QPI ID Read (QPIID) 28
Table 6. ID Definitions 28
9-7. Read Status Register (RDSR) 29
9-8. Read Configuration Register (RDCR) 30
Table 7. Configuration Register 34
9-9. Write Status Register (WRSR) 36
Table 8. Protection Modes 37
9-10. Enter 4-byte mode (EN4B) 40
9-11. Exit 4-byte mode (EX4B) 40
9-12. Read Data Bytes (READ) 41
9-13. Read Data Bytes at Higher Speed (FAST_READ) 42
9-14. Dual Output Read Mode (DREAD) 44
9-15. 2 x I/O Read Mode (2READ) 45
9-16. Quad Read Mode (QREAD) 46
9-17. 4 x I/O Read Mode (4READ) 47
9-18. 4 x I/O Double Transfer Rate Read Mode (4DTRD) 49
9-19. 4 Byte Address Command Set 51
9-20. Burst Read 54
9-21. Performance Enhance Mode 55
9-22. Performance Enhance Mode Reset 58
9-23. Sector Erase (SE) 60
9-24. Block Erase (BE32K) 61
9-25. Block Erase (BE) 62
9-26. Chip Erase (CE) 63

9-27. Page Program (PP) 64
9-28. 4 x I/O Page Program (4PP) 66
9-29. Deep Power-down (DP) 67
9-30. Enter Secured OTP (ENSO) 68
9-31. Exit Secured OTP (EXSO) 68
9-32. Read Security Register (RDSCUR) 68
9-33. Write Security Register (WRSCUR) 68
Table 9. Security Register Definition 69
9-34. Write Protection Selection (WPSEL) 70
9-35. Individual Sector Protection 72
9-36. Program/Erase Suspend/Resume 76
9-37. Erase Suspend 76
9-38. Program Suspend 76
9-39. Write-Resume 78
9-40. No Operation (NOP) 78
9-41. Software Reset (Reset-Enable (RSTEN) and Reset (RST)) 78
9-42. Read SFDP Mode (RDSFDP) 80
Table 10. Signature and Parameter Identification Data Values 81
Table 11. Parameter Table (0): JEDEC Flash Parameter Tables 82
Table 12. RPMC Parameter 89
Table 13. Parameter Table (1): Macronix Flash Parameter Tables 90
10. RESET 92
Table 14. Reset Timing-(Power On) 92
Table 15. Reset Timing-(Other Operation) 92
11. POWER-ON STATE 93
12. ELECTRICAL SPECIFICATIONS 94
Table 16. ABSOLUTE MAXIMUM RATINGS 94
Table 17. CAPACITANCE TA = 25°C, f = 1.0 MHz 94
Table 18. DC CHARACTERISTICS (Temperature = -40°C to 85°C, VCC = 2.7V ~ 3.6V) 96
Table 19. AC CHARACTERISTICS (Temperature = -40°C to 85°C, VCC = 2.7V ~ 3.6V) 97
13. OPERATING CONDITIONS 99
Table 20. Power-Up/Down Voltage and Timing 101
13-1. INITIAL DELIVERY STATE 101
14. ERASE AND PROGRAMMING PERFORMANCE 102
15. DATA RETENTION 102
16. LATCH-UP CHARACTERISTICS 102
17. ORDERING INFORMATION 103
18. PART NAME DESCRIPTION 104
19. PACKAGE INFORMATION 105
20. REVISION HISTORY 108

3V 256M-BIT [x 1/x 2/x 4] CMOS MXSMIO® (SERIAL MULTI I/O) FLASH MEMORY

1. FEATURES

GENERAL

- Supports Serial Peripheral Interface -- Mode 0 and Mode 3
- Single Power Supply Operation
  - 2.7 to 3.6 volt for read, erase, and program operations
- 256Mb: 268,435,456 x 1 bit structure or 134,217,728 x 2 bits (two I/O mode) structure or 67,108,864 x 4 bits (four I/O mode) structure
- Protocol Support
  - Single I/O, Dual I/O and Quad I/O
- Latch-up protected to 100mA from -1V to Vcc +1V
- Low Vcc write inhibit is from 1.5V to 2.5V
- Fast read for SPI mode
  - Support clock frequency up to 133MHz for all protocols
  - Support Fast Read, 2READ, DREAD, 4READ, QREAD instructions
  - Support DTR (Double Transfer Rate) Mode
  - Configurable dummy cycle number for fast read operation
- Quad Peripheral Interface (QPI) available
- Equal Sectors with 4K byte each, or Equal Blocks with 32K byte each or Equal Blocks with 64K byte each
  - Any Block can be erased individually
- Programming :
  - 256byte page buffer
  - Quad Input/Output page program(4PP) to enhance program performance
- Typical 100,000 erase/program cycles
- 20 years data retention

SOFTWARE FEATURES

- Input Data Format
  - 1-byte Command code
- Advanced Security Features
  - Block lock protection

    The BP0-BP3 and T/B status bits define the size of the area to be protected against program and erase instructions
  - Individual sector protection function (Solid Protect)
- Additional 4K bit security OTP
  - Features unique identifier
  - Factory locked identifiable, and customer lockable
- Command Reset
- Program/Erase Suspend and Resume operation
- Electronic Identification
  - JEDEC 1-byte manufacturer ID and 2-byte device ID
  - RES command for 1-byte Device ID
  - REMS command for 1-byte manufacturer ID and 1-byte device ID
- Support Serial Flash Discoverable Parameters (SFDP) mode

HARDWARE FEATURES

- SCLK Input
  - Serial clock input
- SI/SIO0
  - Serial Data Input or Serial Data Input/Output for 2 x I/O read mode and 4 x I/O read mode
- SO/SIO1
  - Serial Data Output or Serial Data Input/Output for 2 x I/O read mode and 4 x I/O read mode
- WP#/SIO2
  - Hardware write protection or serial data Input/Output for 4 x I/O read mode
- RESET#/SIO3
  - Hardware Reset pin or Serial input & Output for 4 x I/O read mode
- PACKAGE
  - 16-pin SOP (300mil)
  - 8-pins SOP (200mil)
  - 8-land WSON (8x6mm)
  - **All devices are RoHS Compliant and Halogen-free**

2. GENERAL DESCRIPTION

MX25L25645G is 256Mb bits serial Flash memory, which is configured as 33,554,432 x 8 internally. When it is in two or four I/O mode, the structure becomes 134,217,728 bits x 2 or 67,108,864 bits x 4. MX25L25645G feature a serial peripheral interface and software protocol allowing operation on a simple 3-wire bus while it is in single I/O mode. The three bus signals are a clock input (SCLK), a serial data input (SI), and a serial data output (SO). Serial access to the device is enabled by CS# input.

When it is in two I/O read mode, the SI pin and SO pin become SIO0 pin and SIO1 pin for address/dummy bits input and data output. When it is in four I/O read mode, the SI pin, SO pin, WP# and RESET# pin become SIO0 pin, SIO1 pin, SIO2 pin and SIO3 pin for address/dummy bits input and data output.

The MX25L25645G MXSMIO® (Serial Multi I/O) provides sequential read operation on whole chip.

After program/erase command is issued, auto program/erase algorithms which program/erase and verify the specified page or sector/block locations will be executed. Program command is executed on byte basis, or page (256 bytes) basis, or word basis for erase command is executed on sector (4K-byte), block (32K-byte), or block (64K-byte), or whole chip basis.

To provide user with ease of interface, a status register is included to indicate the status of the chip. The status read command can be issued to detect completion status of a program or erase operation via WIP bit.

Advanced security features enhance the protection and security functions, please see security features section for more details.

When the device is not in operation and CS# is high, it is put in standby mode.

The MX25L25645G utilizes Macronix's proprietary memory cell, which reliably stores memory contents even after 100,000 program and erase cycles.

Table 1. Read performance Comparison

Numbers of Dummy Cycles	Fast Read (MHz)	Dual Output Fast Read (MHz)	Quad Output Fast Read (MHz)	Dual IO Fast Read (MHz)	Quad IO Fast Read (MHz)	Quad I/O DT Read (MHz)
4	-	-	-	80*	54	-
6	-	-	-	-	80*	54*
8	120*/133R	120*/133R	120*/133R	120/133R	84/104R	70/80R
10	-	-	-	-	120/133R	84/100R

Notes:
1. * mean default status.
2. R mean VCC range = 3.0V-3.6V.

3. PIN CONFIGURATIONS

8-PIN SOP (200mil)

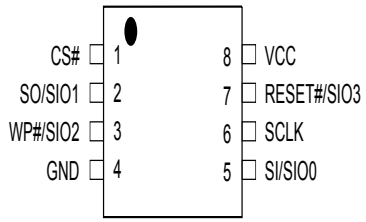

16-PIN SOP (300mil)

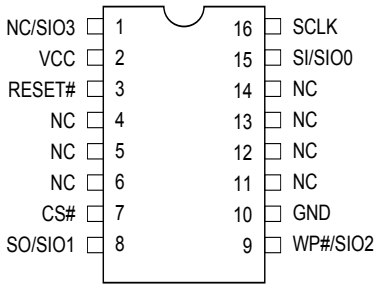

8-WSON (8x6mm)

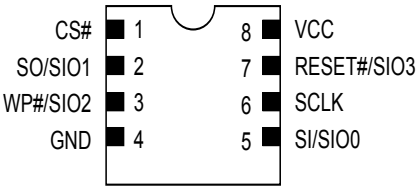

4. PIN DESCRIPTION

SYMBOL	DESCRIPTION
CS#	Chip Select
SI/SIO0	Serial Data Input (for 1 x I/O)/ Serial Data Input & Output (for 2xI/O or 4xI/O read mode)
SO/SIO1	Serial Data Output (for 1 x I/O)/ Serial Data Input & Output (for 2xI/O or 4xI/O read mode)
SCLK	Clock Input
WP#/SIO2	Write Protection Active Low or Serial Data Input & Output (for 4xI/O read mode)
RESET#/SIO3	Hardware Reset Pin Active low or Serial Data Input & Output (for 4xI/O read mode)
NC/SIO3	NC or Serial Data Input & Output (for 4xI/O read mode)
RESET#*	Hardware Reset Pin Active low
VCC	+ 3V Power Supply
GND	Ground
NC	No Connection

Notes:

1. RESET# pin has internal pull up.

5. BLOCK DIAGRAM

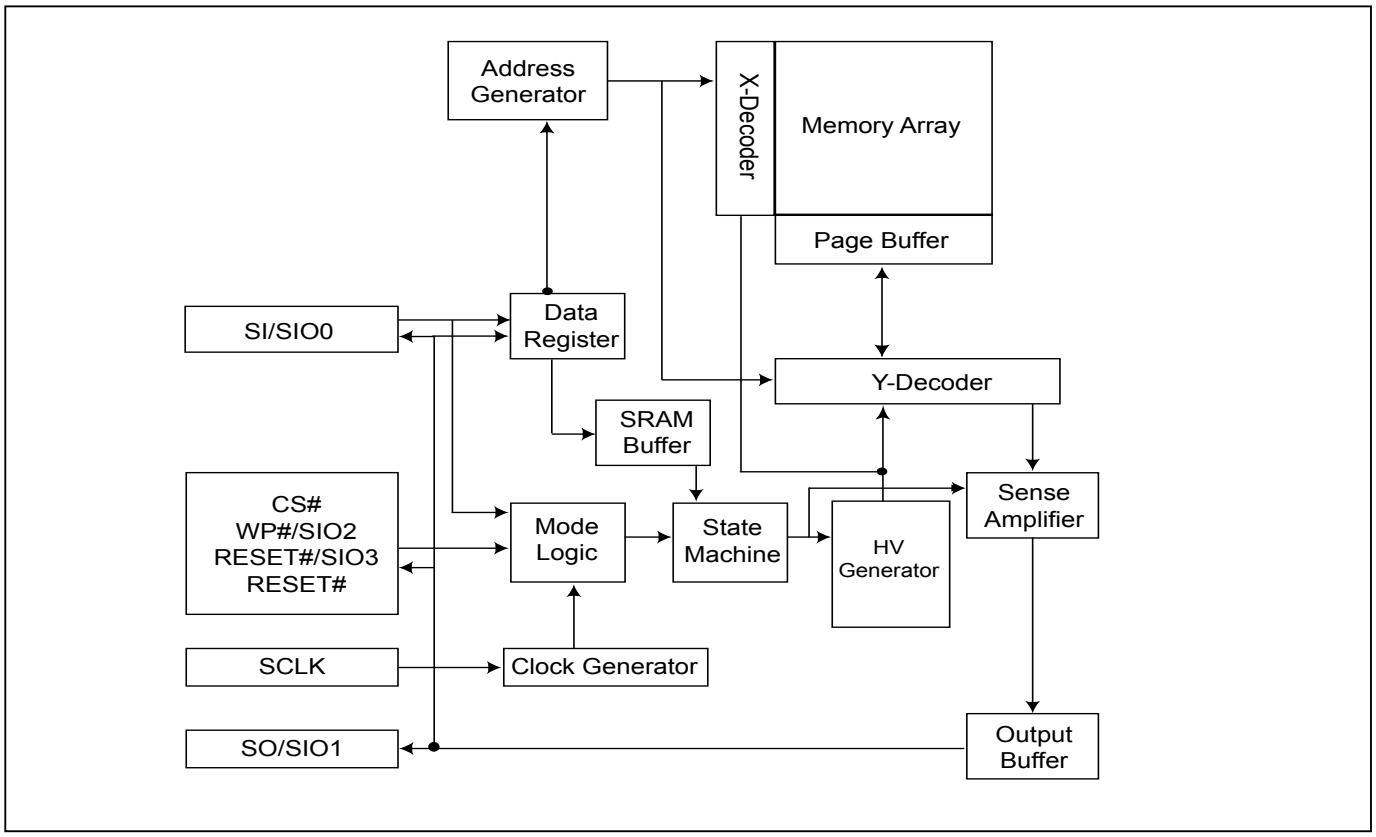

6. DATA PROTECTION

During power transition, there may be some false system level signals which result in inadvertent erasure or programming. The device is designed to protect itself from these accidental write cycles.

The state machine will be reset as standby mode automatically during power up. In addition, the control register architecture of the device constrains that the memory contents can only be changed after specific command sequences have completed successfully.

In the following, there are several features to protect the system from the accidental write cycles during VCC power-up and power-down or from system noise.

- Valid command length checking: The command length will be checked whether it is at byte base and completed on byte boundary.
- Write Enable (WREN) command: WREN command is required to set the Write Enable Latch bit (WEL) before other command to change data.
- Deep Power Down Mode: By entering deep power down mode, the flash device also is under protected from writing all commands except Release from deep power down mode command (RDP) and Read Electronic Signature command (RES), and softreset command.
- Advanced Security Features: there are some protection and security features which protect content from inadvertent write and hostile access.

I. Block lock protection

- The Software Protected Mode (SPM) use (BP3, BP2, BP1, BP0 and T/B) bits to allow part of memory to be protected as read only. The protected area definition is shown as *Table 2* Protected Area Sizes, the protected areas are more flexible which may protect various area by setting value of BP0-BP3 bits.
- The Hardware Proteced Mode (HPM) use WP#/SIO2 to protect the (BP3, BP2, BP1, BP0) bits and Status Register Write Protect bit.
- In four I/O and QPI mode, the feature of HPM will be disabled.

Table 2. Protected Area Sizes

Protected Area Sizes (T/B bit = 0)

Status bit				Protect Level
BP3	BP2	BP1	BP0	256Mb
0	0	0	0	0 (none)
0	0	0	1	1 (1 block, protected block 511st)
0	0	1	0	2 (2 blocks, protected block 510th~511st)
0	0	1	1	3 (4 blocks, protected block 508th~511st)
0	1	0	0	4 (8 blocks, protected block 504th~511st)
0	1	0	1	5 (16 blocks, protected block 496th~511st)
0	1	1	0	6 (32 blocks, protected block 480th~511st)
0	1	1	1	7 (64 blocks, protected block 448th~511st)
1	0	0	0	8 (128 blocks, protected block 384th~511st)
1	0	0	1	9 (256 blocks, protected block 256th~511st)
1	0	1	0	10 (512 blocks, protected all)
1	0	1	1	11 (512 blocks, protected all)
1	1	0	0	12 (512 blocks, protected all)
1	1	0	1	13 (512 blocks, protected all)
1	1	1	0	14 (512 blocks, protected all)
1	1	1	1	15 (512 blocks, protected all)

Protected Area Sizes (T/B bit = 1)

Status bit				Protect Level
BP3	BP2	BP1	BP0	256Mb
0	0	0	0	0 (none)
0	0	0	1	1 (1 block, protected block 0th)
0	0	1	0	2 (2 blocks, protected block 0th~1th)
0	0	1	1	3 (4 blocks, protected block 0th~3rd)
0	1	0	0	4 (8 blocks, protected block 0th~7th)
0	1	0	1	5 (16 blocks, protected block 0th~15th)
0	1	1	0	6 (32 blocks, protected block 0th~31st)
0	1	1	1	7 (64 blocks, protected block 0th~63rd)
1	0	0	0	8 (128 blocks, protected block 0th~127th)
1	0	0	1	9 (256 blocks, protected block 0th~255th)
1	0	1	0	10 (512 blocks, protected all)
1	0	1	1	11 (512 blocks, protected all)
1	1	0	0	12 (512 blocks, protected all)
1	1	0	1	13 (512 blocks, protected all)
1	1	1	0	14 (512 blocks, protected all)
1	1	1	1	15 (512 blocks, protected all)

II. Additional 4K-bit secured OTP for unique identifier: to provide 4K-bit one-time program area for setting device unique serial number - Which may be set by factory or system customer.

- Security register bit 0 indicates whether the chip is locked by factory or not.

- To program the 4K-bit secured OTP by entering 4K-bit secured OTP mode (with Enter Security OTP command), and going through normal program procedure, and then exiting 4K-bit secured OTP mode by writing Exit Security OTP command.

- Customer may lock-down the customer lockable secured OTP by writing WRSCUR(write security register) command to set customer lock-down bit1 as "1". Please refer to *"Table 9. Security Register Definition"* for security register bit definition and *"Table 3. 4K-bit Secured OTP Definition"* for address range definition.

- Note: Once lock-down whatever by factory or customer, it cannot be changed any more. While in 4K-bit secured OTP mode, array access is not allowed.

Table 3. 4K-bit Secured OTP Definition

Address range	Size	Standard Factory Lock	Customer Lock
xxx000~xxx00F	128-bit	ESN (electrical serial number)	Determined by customer
xxx010~xxx1FF	3968-bit	N/A	

7. Memory Organization

Table 4. Memory Organization

Block(64K-byte)	Block(32K-byte)	Sector	Address Range	
511	1023	8191	1FFF000h	1FFFFFFh
		⋮	⋮	⋮
		8184	1FF8000h	1FF8FFFh
	1022	8183	1FF7000h	1FF7FFFh
		⋮	⋮	⋮
		8176	1FF0000h	1FF0FFFh
510	1021	8175	1FEF000h	1FEFFFFh
		⋮	⋮	⋮
		8168	1FE8000h	1FE8FFFh
	1020	8167	1FE7000h	1FE7FFFh
		⋮	⋮	⋮
		8160	1FE0000h	1FE0FFFh
509	1019	8159	1FDF000h	1FDFFFFh
		⋮	⋮	⋮
		8152	1FD8000h	1FD8FFFh
	1018	8151	1FD7000h	1FD7FFFh
		⋮	⋮	⋮
		8144	1FD0000h	1FD0FFFh
2	5	47	002F000h	002FFFFh
		⋮	⋮	⋮
		40	0028000h	0028FFFh
	4	39	027000h	0027FFFh
		⋮	⋮	⋮
		32	0020000h	0020FFFh
1	3	31	001F000h	001FFFFh
		⋮	⋮	⋮
		24	0018000h	0018FFFh
	2	23	0017000h	0017FFFh
		⋮	⋮	⋮
		16	0010000h	0010FFFh
0	1	15	000F000h	000FFFFh
		⋮	⋮	⋮
		8	0008000h	0008FFFh
	0	7	0007000h	0007FFFh
		⋮	⋮	⋮
		0	0000000h	0000FFFh

individual 16 sectors lock/unlock unit:4K-byte

individual block lock/unlock unit:64K-byte

individual block lock/unlock unit:64K-byte

individual block lock/unlock unit:64K-byte

individual 16 sectors lock/unlock unit:4K-byte

8. DEVICE OPERATION

1. Before a command is issued, status register should be checked to ensure device is ready for the intended operation.

2. When incorrect command is inputted to this device, this device becomes standby mode and keeps the standby mode until next CS# falling edge. In standby mode, SO pin of this device should be High-Z.

3. When correct command is inputted to this device, this device becomes active mode and keeps the active mode until next CS# rising edge.

4. Input data is latched on the rising edge of Serial Clock (SCLK) and data shifts out on the falling edge of SCLK. The difference of Serial mode 0 and mode 3 is shown as "Serial Modes Supported".

5. For the following instructions: RDID, RDSR, RDSCUR, READ/READ4B, FAST_READ/FAST_READ4B, 2READ/2READ4B, DREAD/DREAD4B, 4READ/4READ4B, QREAD/QREAD4B, RDSFDP, RES, REMS, QPIID, RDSPB, RDEAR, RDCR, the shifted-in instruction sequence is followed by a data-out sequence. After any bit of data being shifted out, the CS# can be high. For the following instructions: WREN, WRDI, WRSR, SE/SE4B, BE32K/BE32K4B, BE/BE4B, CE, PP/PP4B, 4PP/4PP4B, DP, ENSO, EXSO, WRSCUR, EN4B, EX4B, WPSEL, SUSPEND, RESUME, NOP, RSTEN, RST, EQIO, RSTQIO the CS# must go high exactly at the byte boundary; otherwise, the instruction will be rejected and not executed.

6. During the progress of Write Status Register, Program, Erase operation, to access the memory array is neglected and not affect the current operation of Write Status Register, Program, Erase.

Figure 1. Serial Modes Supported

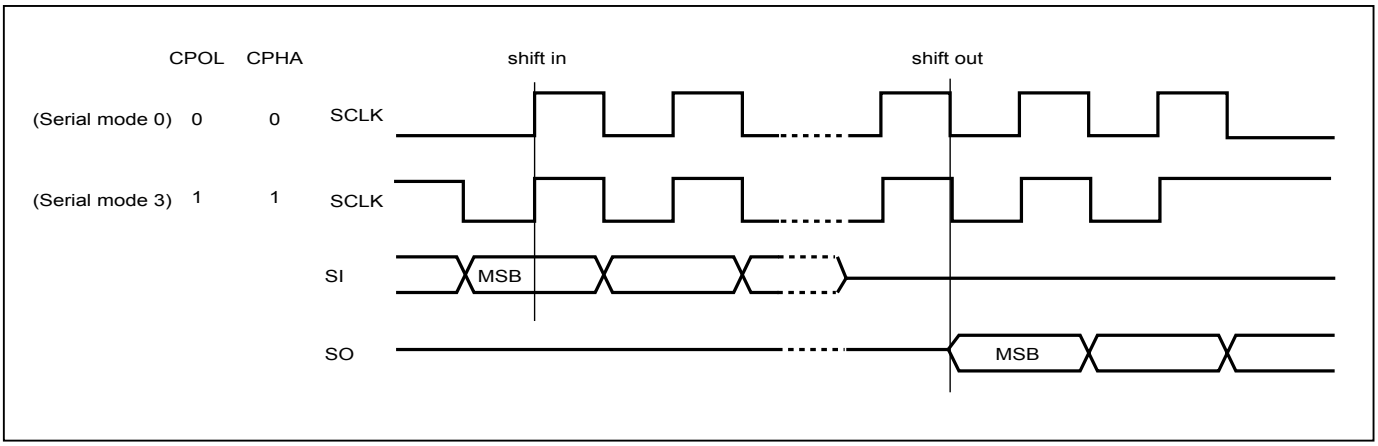

Note:
CPOL indicates clock polarity of Serial master, CPOL=1 for SCLK high while idle, CPOL=0 for SCLK low while not transmitting. CPHA indicates clock phase. The combination of CPOL bit and CPHA bit decides which Serial mode is supported.

Figure 2. Serial Input Timing

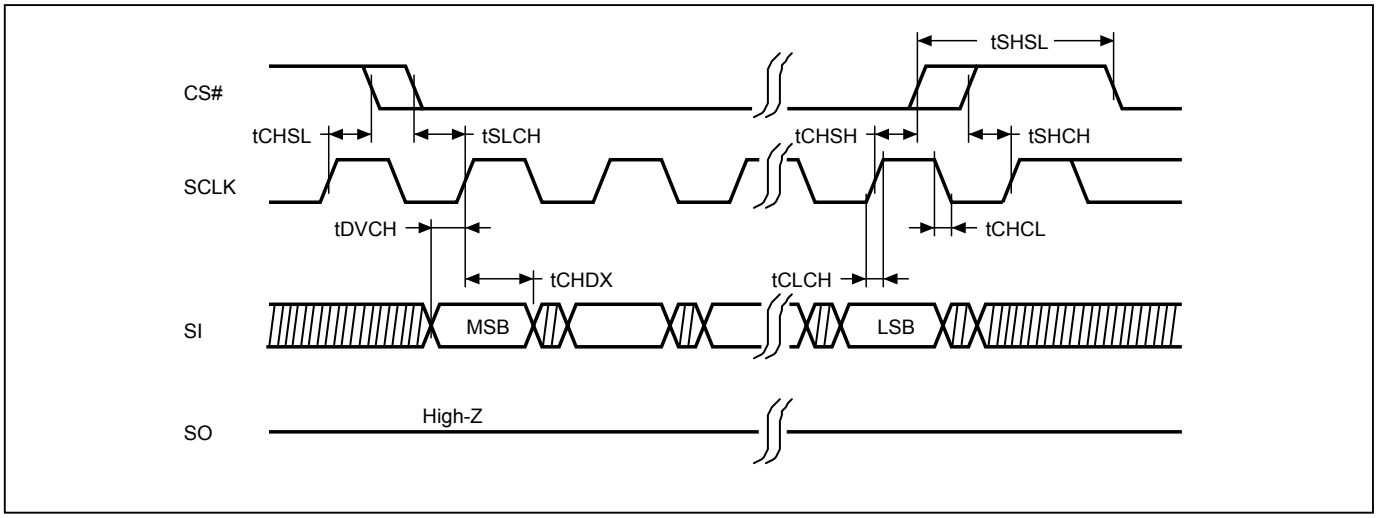

Figure 3. Output Timing (STR mode)

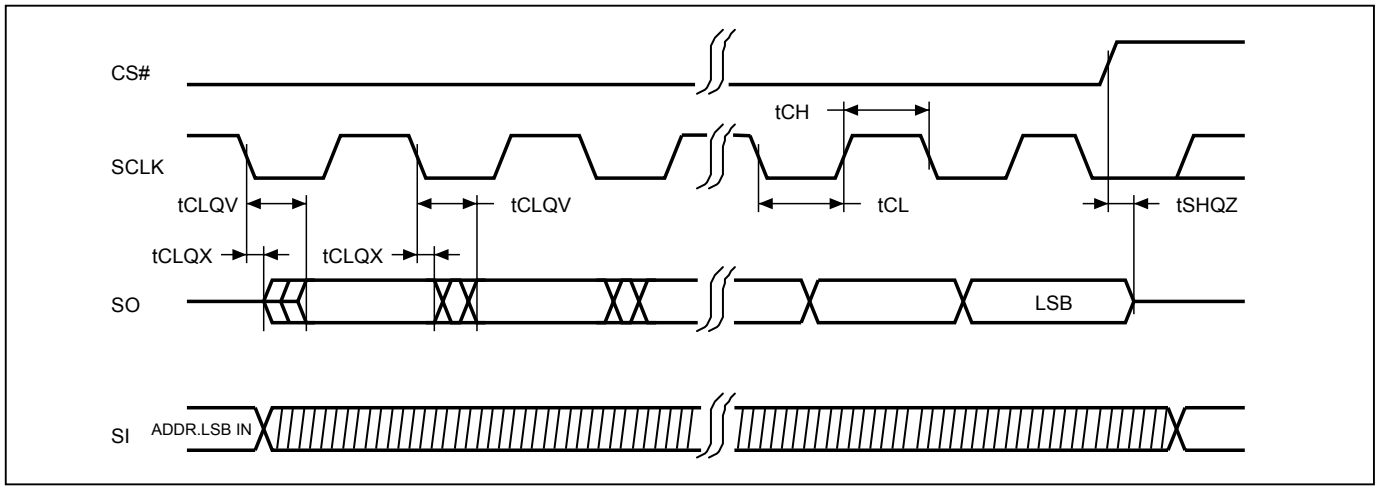

Figure 4. Output Timing (DTR mode)

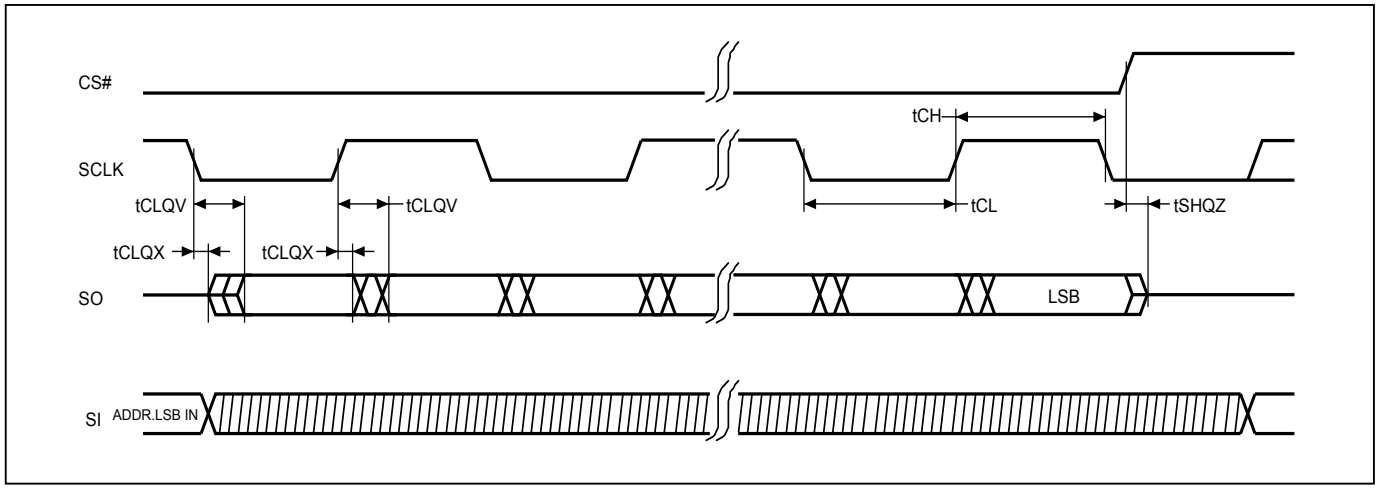

8-1. 256Mb Address Protocol

The original 24 bit address protocol of serial Flash can only access density size below 128Mb. For the memory device of 256Mb and above, the 32bit address is requested for access higher memory size. The MX25L25645G provides three different methods to access the whole 256Mb density:

(1)Command entry 4-byte address mode: Issue Enter 4-Byte mode command to set up the 4BYTE bit in Configuration Register bit. After 4BYTE bit has been set, the number of address cycle become 32-bit.

(2)Extended Address Register (EAR): configure the memory device into two 128Mb segments to select which one is active through the EAR bit "0".

(3)4-byte Address Command Set: When issuing 4-byte address command set, 4-byte address (A31-A0) is requested after the instruction code. Please note that it is not necessary to issue EN4B command before issuing any of 4-byte command set.

Enter 4-Byte Address Mode

In 4-byte Address mode, all instructions are 32-bits address clock cycles. By using EN4B and EX4B to enable and disable the 4-byte address mode.

When 4-byte address mode is enabled, the EAR<0> becomes "don't care" for all instructions requiring 4-byte address. The EAR function will be disabled when 4-byte mode is enabled.

Extended Address Register (Configurable)

The device provides an 8-bit volatile register for extended Address Register: it identifies the extended address (A31~A24) above 128Mb density by using original 3-byte address.

Extended Address Register (EAR)

Bit 7	Bit 6	Bit 5	Bit 4	Bit 3	Bit 2	Bit 1	Bit 0
A31	A30	A29	A28	A27	A26	A25	A24

For the MX25L25645G the A31 to A25 are Don't Care. During EAR, reading these bits will read as 0. The bit 0 is default as "0".

Figure 5. Top and Bottom 128M bits

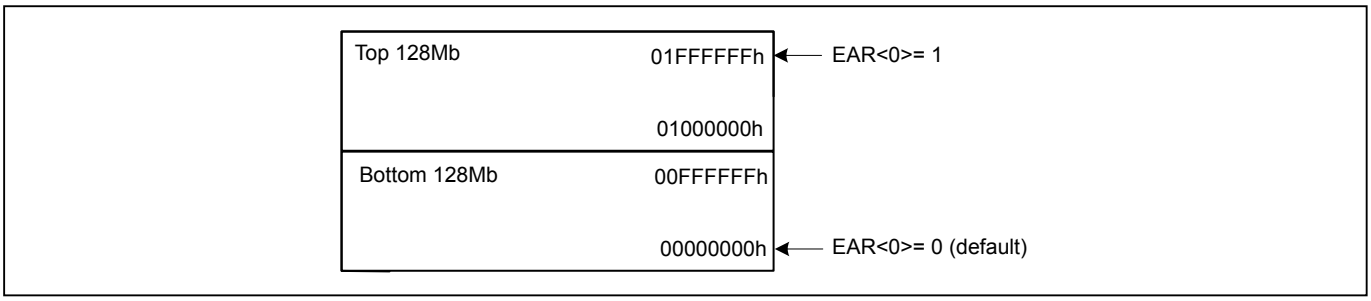

When under EAR mode, Read, Program, Erase operates in the selected segment by using 3-byte address mode.

For the read operation, the whole array data can be continually read out with one command. Data output starts from the selected top or bottom 128Mb, but it can cross the boundary. When the last byte of the segment is reached, the next byte (in a continuous reading) is the first byte of the next segment. However, the EAR (Extended Address Register) value does not change. The random access reading can only be operated in the selected segment.

The Chip erase command will erase the whole chip and is not limited by EAR selected segment.

8-2. Quad Peripheral Interface (QPI) Read Mode

QPI protocol enables user to take full advantage of Quad I/O Serial Flash by providing the Quad I/O interface in command cycles, address cycles and as well as data output cycles.

Enable QPI mode

By issuing 35H command, the QPI mode is enabled. After QPI mode is enabled, the device enters quad mode (4-4-4) without QE bit status changed.

Figure 6. Enable QPI Sequence

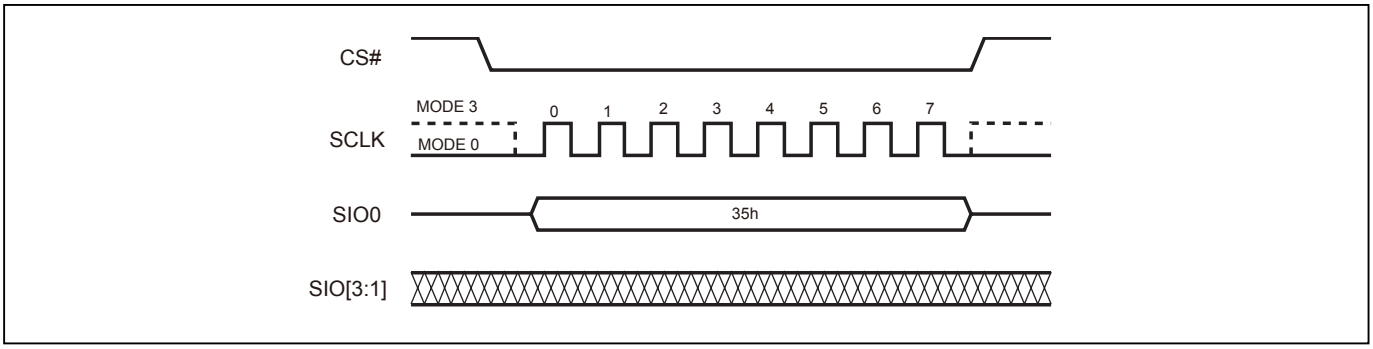

Reset QPI (RSTQIO)

To reset the QPI mode, the RSTQIO (F5H) command is required. After the RSTQIO command is issued, the device returns from QPI mode (4 I/O interface in command cycles) to SPI mode (1 I/O interface in command cycles).

Note:
For EQIO and RSTQIO commands, CS# high width has to follow "write spec" tSHSL for next instruction.

Figure 7. Reset QPI Mode

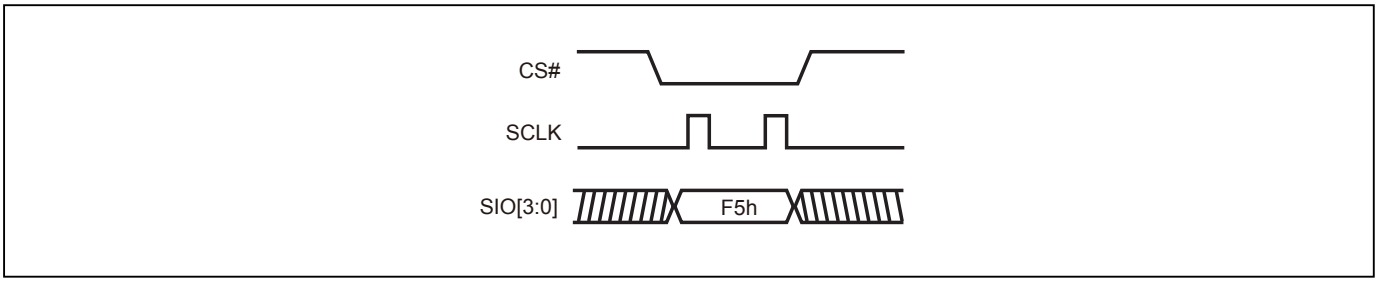

9. COMMAND DESCRIPTION

Table 5. Command Set

Read/Write Array Commands

Command (byte)	READ (normal read)	FAST READ (fast read data)	2READ (2 x I/O read command)	DREAD (1I 2O read)	4READ	QREAD (1I 4O read)	4DTRD (Quad I/O DT Read)
Mode	SPI	SPI	SPI	SPI	SPI/QPI	SPI	SPI/QPI
Address Bytes	3/4	3/4	3/4	3/4	3/4	3/4	3/4
1st byte	03 (hex)	0B (hex)	BB (hex)	3B (hex)	EB (hex)	6B (hex)	ED (hex)
2nd byte	ADD1	ADD1	ADD1	ADD1	ADD1	ADD1	ADD1
3rd byte	ADD2	ADD2	ADD2	ADD2	ADD2	ADD2	ADD2
4th byte	ADD3	ADD3	ADD3	ADD3	ADD3	ADD3	ADD3
5th byte		Dummy*	Dummy*	Dummy*	Dummy*	Dummy*	Dummy*
Data Cycles							
Action	n bytes read out until CS# goes high	n bytes read out until CS# goes high	n bytes read out by 2 x I/O until CS# goes high	n bytes read out by Dual output until CS# goes high	Quad I/O read for bottom 128Mb with 6 dummy cycles	n bytes read out by Quad output until CS# goes high	n bytes read out (Double Transfer Rate) by 4xI/O until CS# goes high

Command (byte)	PP (page program)	4PP (quad page program)	SE (sector erase)	BE 32K (block erase 32KB)	BE (block erase 64KB)	CE (chip erase)
Mode	SPI/QPI	SPI	SPI/QPI	SPI/QPI	SPI/QPI	SPI/QPI
Address Bytes	3/4	3/4	3/4	3/4	3/4	0
1st byte	02 (hex)	38 (hex)	20 (hex)	52 (hex)	D8 (hex)	60 or C7 (hex)
2nd byte		ADD1	ADD1	ADD1	ADD1	
3rd byte		ADD2	ADD2	ADD2	ADD2	
4th byte		ADD3	ADD3	ADD3	ADD3	
5th byte						
Data Cycles	1-256	1-256				
Action	to program the selected page	quad input to program the selected page	to erase the selected sector	to erase the selected 32K block	to erase the selected block	to erase whole chip

* Dummy cycle numbers will be different depending on the bit6 & bit 7 (DC0 & DC1) setting in configuration register.

Read/Write Array Commands (4 Byte Address Command Set)

Command (byte)	READ4B	FAST READ4B	2READ4B	DREAD4B	4READ4B	QREAD4B
Mode	SPI	SPI	SPI	SPI	SPI/QPI	SPI
Address Bytes	4	4	4	4	4	4
1st byte	13 (hex)	0C (hex)	BC (hex)	3C (hex)	EC (hex)	6C (hex)
2nd byte	ADD1	ADD1	ADD1	ADD1	ADD1	ADD1
3rd byte	ADD2	ADD2	ADD2	ADD2	ADD2	ADD2
4th byte	ADD3	ADD3	ADD3	ADD3	ADD3	ADD3
5th byte	ADD4	ADD4	ADD4	ADD4	ADD4	ADD4
6th byte		Dummy	Dummy	Dummy	Dummy	Dummy
Data Cycles						
Action	read data byte by 4 byte address	read data byte by 4 byte address	read data byte by 2 x I/O with 4 byte address	Read data byte by Dual Output with 4 byte address	read data byte by 4 x I/O with 4 byte address	Read data byte by Quad Output with 4 byte address

Command (byte)	4DTRD4B (Quad I/O DT Read)	PP4B	4PP4B	BE4B (block erase 64KB)	BE32K4B (block erase 32KB)	SE4B (Sector erase 4KB)
Mode	SPI/QPI	SPI/QPI	SPI	SPI/QPI	SPI/QPI	SPI/QPI
Address Bytes	3/4	4	4	4	4	4
1st byte	EE (hex)	12 (hex)	3E (hex)	DC (hex)	5C (hex)	21 (hex)
2nd byte	ADD1	ADD1	ADD1	ADD1	ADD1	ADD1
3rd byte	ADD2	ADD2	ADD2	ADD2	ADD2	ADD2
4th byte	ADD3	ADD3	ADD3	ADD3	ADD3	ADD3
5th byte	ADD4	ADD4	ADD4	ADD4	ADD4	ADD4
6th byte	Dummy*					
Data Cycles		1-256	1-256			
Action	n bytes read out (Double Transfer Rate) by 4xI/O until CS# goes high	to program the selected page with 4byte address	Quad input to program the selected page with 4byte address	to erase the selected (64KB) block with 4byte address	to erase the selected (32KB) block with 4byte address	to erase the selected (4KB) sector with 4byte address

Register/Setting Commands

Command (byte)	WREN (write enable)	WRDI (write disable)	RDSR (read status register)	RDCR (read configuration register)	WRSR (write status/ configuration register)	RDEAR (read extended address register)	WREAR (write extended address register)
Mode	SPI/QPI	SPI/QPI	SPI/QPI	SPI/QPI	SPI/QPI	SPI/QPI	SPI/QPI
1st byte	06 (hex)	04 (hex)	05 (hex)	15 (hex)	01 (hex)	C8 (hex)	C5 (hex)
2nd byte					Values		
3rd byte					Values		
4th byte							
5th byte							
Data Cycles					1-2		1
Action	sets the (WEL) write enable latch bit	resets the (WEL) write enable latch bit	to read out the values of the status register	to read out the values of the configuration register	to write new values of the status/ configuration register	read extended address register	write extended address register

Command (byte)	WPSEL (Write Protect Selection)	EQIO (Enable QPI)	RSTQIO (Reset QPI)	EN4B (enter 4-byte mode)	EX4B (exit 4-byte mode)	PGM/ERS Suspend (Suspends Program/ Erase)	PGM/ERS Resume (Resumes Program/ Erase)
Mode	SPI/QPI	SPI	QPI	SPI/QPI	SPI/QPI	SPI/QPI	SPI/QPI
1st byte	68 (hex)	35 (hex)	F5 (hex)	B7 (hex)	E9 (hex)	B0 (hex)	30 (hex)
2nd byte							
3rd byte							
4th byte							
5th byte							
Data Cycles							
Action	to enter and enable individal block protect mode	Entering the QPI mode	Exiting the QPI mode	to enter 4-byte mode and set 4BYTE bit as "1"	to exit 4-byte mode and clear 4BYTE bit to be "0"		

Command (byte)	DP (Deep power down)	RDP (Release from deep power down)	SBL (Set Burst Length)
Mode	SPI/QPI	SPI/QPI	SPI/QPI
1st byte	B9 (hex)	AB (hex)	C0 (hex)
2nd byte			
3rd byte			
4th byte			
5th byte			
Data Cycles			
Action	enters deep power down mode	release from deep power down mode	to set Burst length

ID/Security Commands

Command (byte)	RDID (read identific-ation)	RES (read electronic ID)	REMS (read electronic manufacturer & device ID)	QPIID (QPI ID Read)	RDSFDP	ENSO (enter secured OTP)	EXSO (exit secured OTP)
Mode	SPI	SPI/QPI	SPI	QPI	SPI/QPI	SPI/QPI	SPI/QPI
Address Bytes	0	0	0	0	3	0	0
1st byte	9F (hex)	AB (hex)	90 (hex)	AF (hex)	5A (hex)	B1 (hex)	C1 (hex)
2nd byte		x	x		ADD1		
3rd byte		x	x		ADD2		
4th byte			ADD1 (Note 1)		ADD3		
5th byte					Dummy (8)		
Action	outputs JEDEC ID: 1-byte Manufacturer ID & 2-byte Device ID	to read out 1-byte Device ID	output the Manufacturer ID & Device ID	ID in QPI interface	Read SFDP mode	to enter the 4K-bit secured OTP mode	to exit the 4K-bit secured OTP mode

Command (byte)	RDSCUR (read security register)	WRSCUR (write security register)	WRSPB (SPB bit program)	ESSPB (all SPB bit erase)	RDSPB (read SPB status)	WRLR (write lock register)	RDLR (read lock register)
Mode	SPI/QPI	SPI/QPI	SPI	SPI	SPI	SPI	SPI
Address Bytes	0	0	4	0	4	0	0
1st byte	2B (hex)	2F (hex)	E3 (hex)	E4 (hex)	E2 (hex)	2C (hex)	2D (hex)
2nd byte			ADD1		ADD1		
3rd byte			ADD2		ADD2		
4th byte			ADD3		ADD3		
5th byte			ADD4		ADD4		
Data Cycles					1	2	2
Action	to read value of security register	to set the lock-down bit as "1" (once lock-down, cannot be updated)					

Reset Commands

Command (byte)	NOP (No Operation)	RSTEN (Reset Enable)	RST (Reset Memory)
Mode	SPI/QPI	SPI/QPI	SPI/QPI
1st byte	00 (hex)	66 (hex)	99 (hex)
2nd byte			
3rd byte			
4th byte			
5th byte			
Action			

Note 1: The count base is 4-bit for ADD(2) and Dummy(2) because of 2 x I/O. And the MSB is on SO/SIO1 which is different from 1 x I/O condition.

Note 2: ADD=00H will output the manufacturer ID first and AD=01H will output device ID first.

Note 3: It is not recommended to adopt any other code not in the command definition table, which will potentially enter the hidden mode.

Note 4: Before executing RST command, RSTEN command must be executed. If there is any other command to interfere, the reset operation will be disabled.

Note 5: The number in parentheses after "ADD" or "Data" stands for how many clock cycles it has. For example, "Data(8)" represents there are 8 clock cycles for the data in. Please note the number after "ADD" are based on 3-byte address mode, for 4-byte address mode, which will be increased.

9-1. Write Enable (WREN)

The Write Enable (WREN) instruction is for setting Write Enable Latch (WEL) bit. For those instructions like PP/PP4B, 4PP/4PP4B, SE/SE4B, BE32K/BE32K4B, BE/BE4B, CE, and WRSR, which are intended to change the device content WEL bit should be set every time after the WREN instruction setting the WEL bit.

The sequence of issuing WREN instruction is: CS# goes low→sending WREN instruction code→ CS# goes high.

Both SPI (8 clocks) and QPI (2 clocks) command cycle can accept by this instruction. The SIO[3:1] are don't care in SPI mode.

Figure 8. Write Enable (WREN) Sequence (SPI Mode)

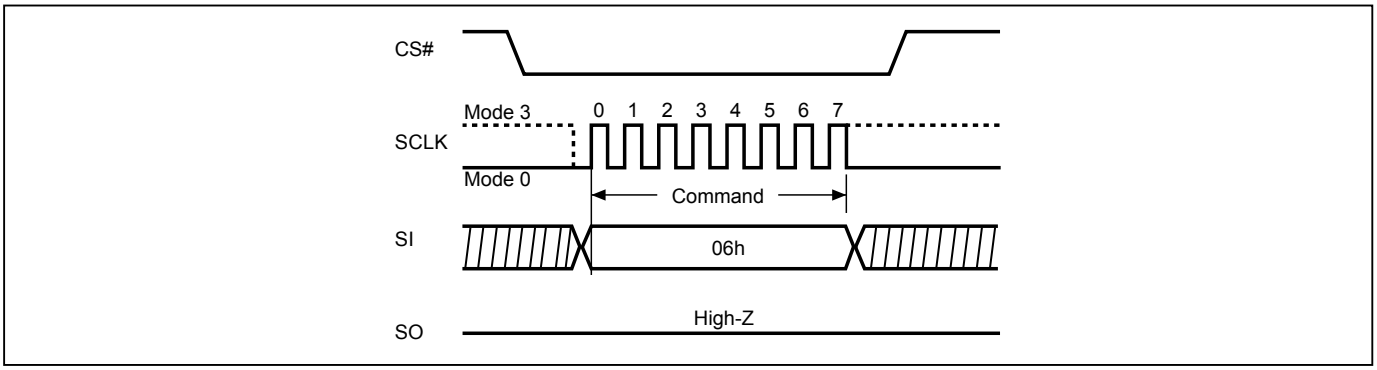

Figure 9. Write Enable (WREN) Sequence (QPI Mode)

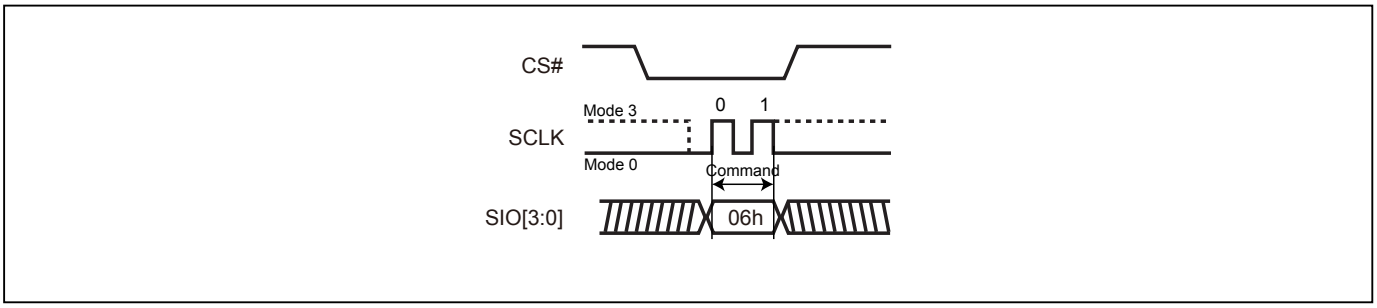

9-2. Write Disable (WRDI)

The Write Disable (WRDI) instruction is to reset Write Enable Latch (WEL) bit.

The sequence of issuing WRDI instruction is: CS# goes low→sending WRDI instruction code→CS# goes high.

Both SPI (8 clocks) and QPI (2 clocks) command cycle can accept by this instruction. The SIO[3:1] are don't care in SPI mode.

The WEL bit is reset by following situations:

- Power-up
- Reset# pin driven low
- WRDI command completion
- WRSR command completion
- PP/PP4B command completion
- 4PP/4PP4B command completion
- SE/SE4B command completion
- BE32K/BE32K4B command completion
- BE/BE4B command completion
- CE command completion
- PGM/ERS Suspend command completion
- Softreset command completion
- WRSCUR command completion
- WPSEL command completion
- WREAR command completion
- WRSPB command completion
- ESSPB command completion

Figure 10. Write Disable (WRDI) Sequence (SPI Mode)

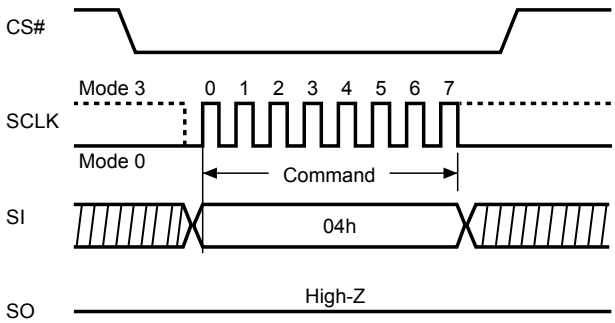

Figure 11. Write Disable (WRDI) Sequence (QPI Mode)

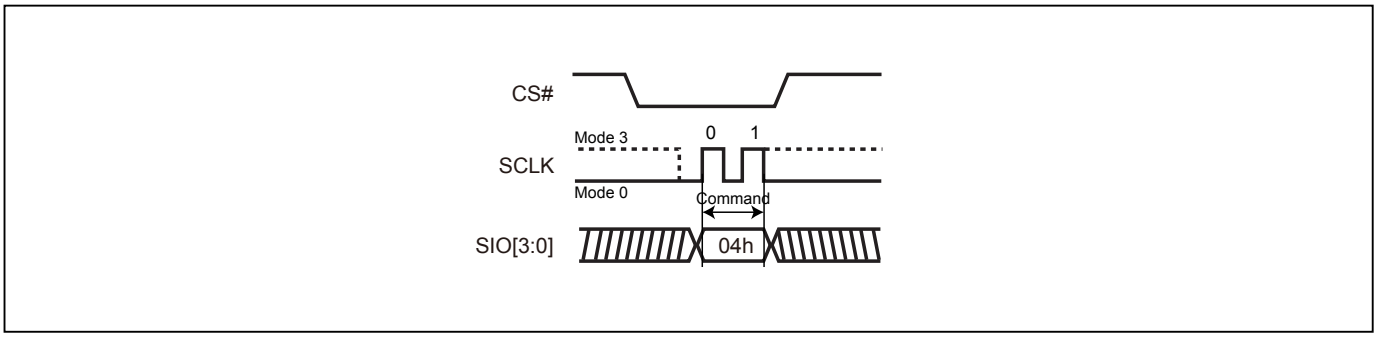

9-3. Read Identification (RDID)

The RDID instruction is for reading the manufacturer ID of 1-byte and followed by Device ID of 2-byte. The Macronix Manufacturer ID and Device ID are listed as *Table 6* ID Definitions.

The sequence of issuing RDID instruction is: CS# goes low→ sending RDID instruction code→24-bits ID data out on SO→ to end RDID operation can drive CS# to high at any time during data out.

While Program/Erase operation is in progress, it will not decode the RDID instruction, therefore there's no effect on the cycle of program/erase operation which is currently in progress. When CS# goes high, the device is at standby stage.

Figure 12. Read Identification (RDID) Sequence (SPI mode only)

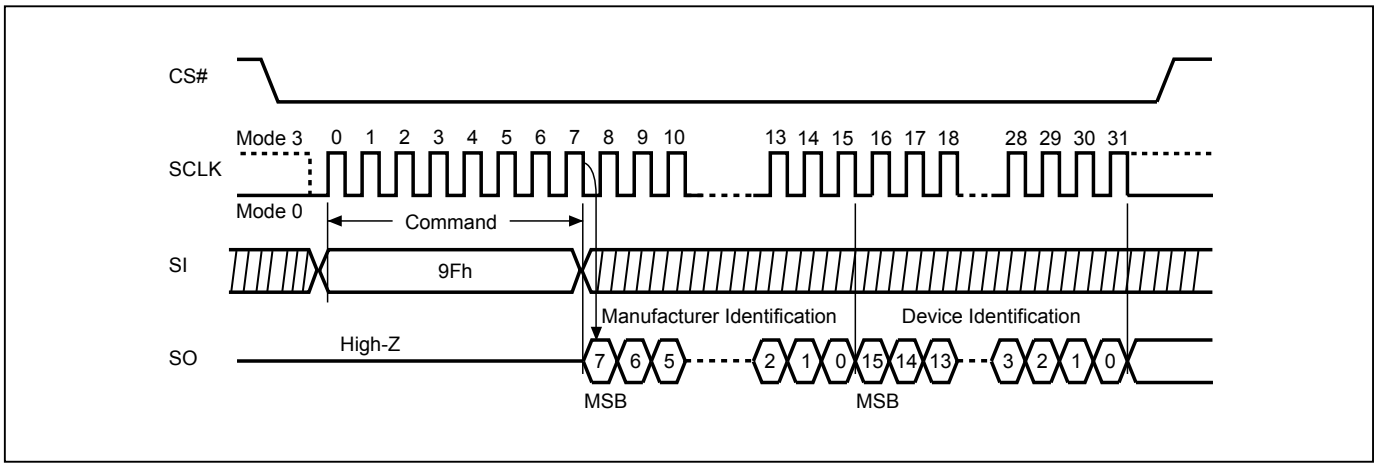

9-4. Release from Deep Power-down (RDP), Read Electronic Signature (RES)

The Release from Deep Power-down (RDP) instruction is completed by driving Chip Select (CS#) High. When Chip Select (CS#) is driven High, the device is put in the Stand-by Power mode. If the device was not previously in the Deep Power-down mode, the transition to the Stand-by Power mode is immediate. If the device was previously in the Deep Power-down mode, though, the transition to the Stand-by Power mode is delayed by tRES2, and Chip Select (CS#) must remain High for at least tRES2(max), as specified in *"Table 19. AC CHARACTERISTICS (Temperature = -40°C to 85°C, VCC = 2.7V ~ 3.6V)"*. Once in the Stand-by Power mode, the device waits to be selected, so that it can receive, decode and execute instructions. The RDP instruction is only for releasing from Deep Power Down Mode. Reset# pin goes low will release the Flash from deep power down mode.

RES instruction is for reading out the old style of 8-bit Electronic Signature, whose values are shown as *"Table 6. ID Definitions"*. This is not the same as RDID instruction. It is not recommended to use for new design. For new design, please use RDID instruction.

Even in Deep power-down mode, the RDP and RES are also allowed to be executed, only except the device is in progress of program/erase/write cycle; there's no effect on the current program/erase/write cycle in progress.

Both SPI (8 clocks) and QPI (2 clocks) command cycle can accept by this instruction. The SIO[3:1] are don't care when during SPI mode.

The RES instruction is ended by CS# goes high after the ID been read out at least once. The ID outputs repeatedly if continuously send the additional clock cycles on SCLK while CS# is at low. If the device was not previously in Deep Power-down mode, the device transition to standby mode is immediate. If the device was previously in Deep Power-down mode, there's a delay of tRES2 to transit to standby mode, and CS# must remain to high at least tRES2(max). Once in the standby mode, the device waits to be selected, so it can be receive, decode, and execute instruction.

Figure 13. Read Electronic Signature (RES) Sequence (SPI Mode)

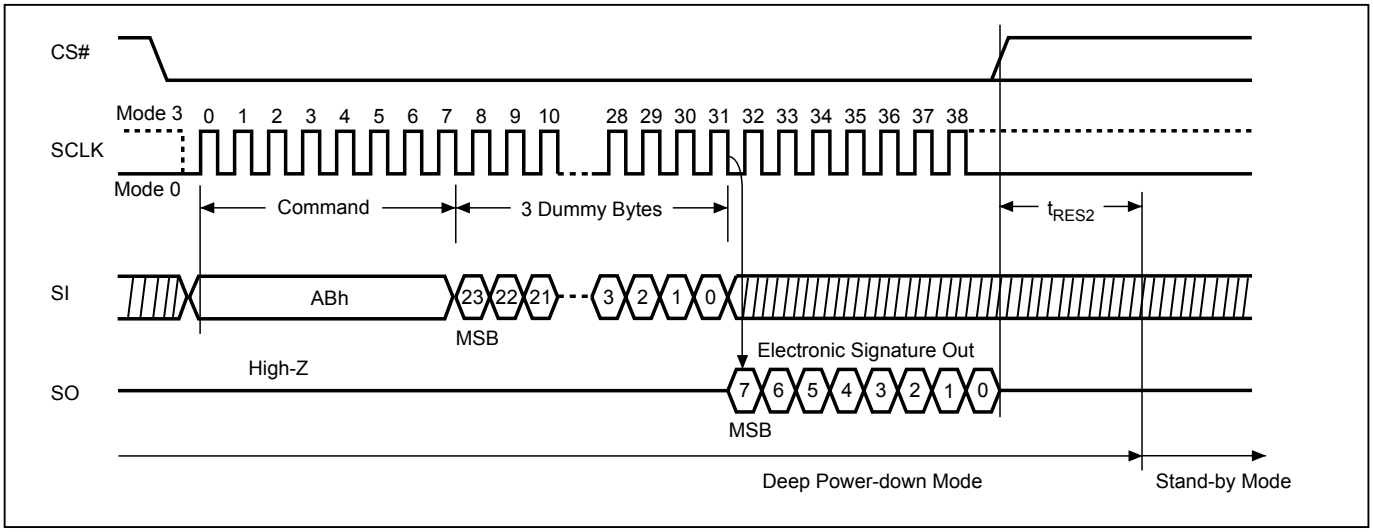

Figure 14. Read Electronic Signature (RES) Sequence (QPI Mode)

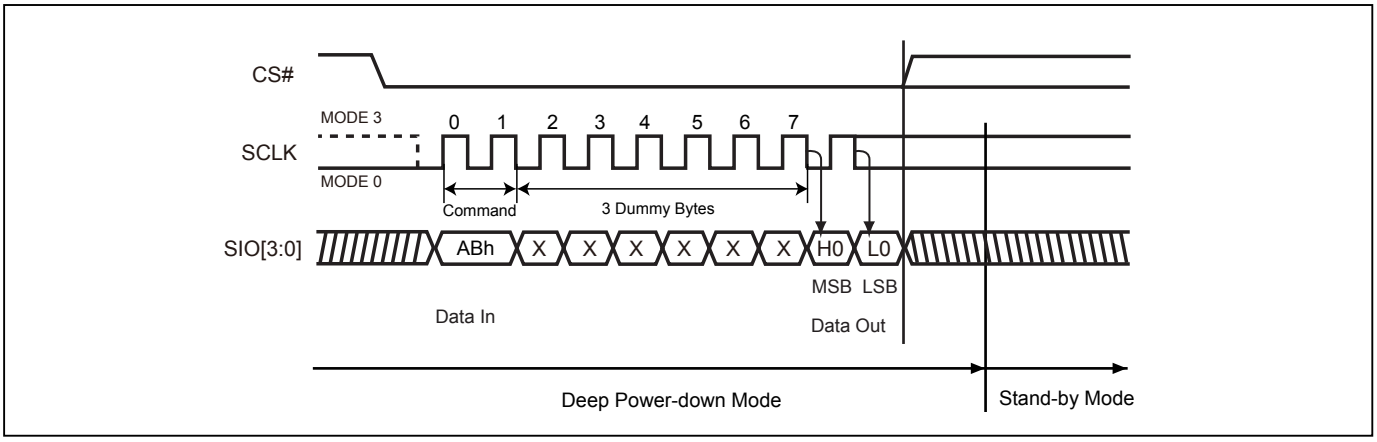

Figure 15. Release from Deep Power-down (RDP) Sequence (SPI Mode)

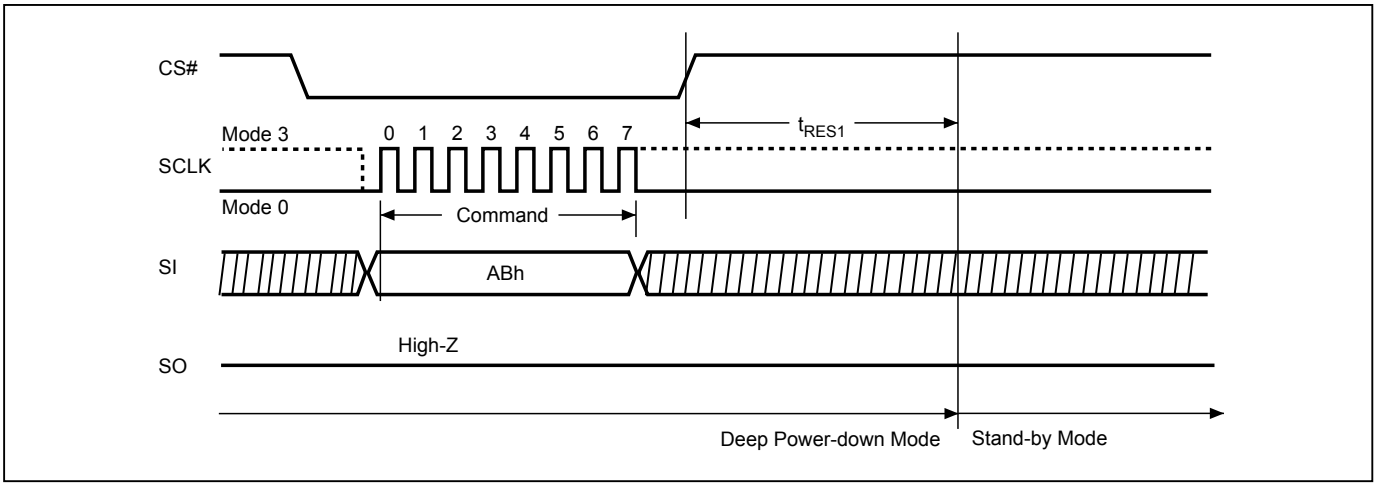

Figure 16. Release from Deep Power-down (RDP) Sequence (QPI Mode)

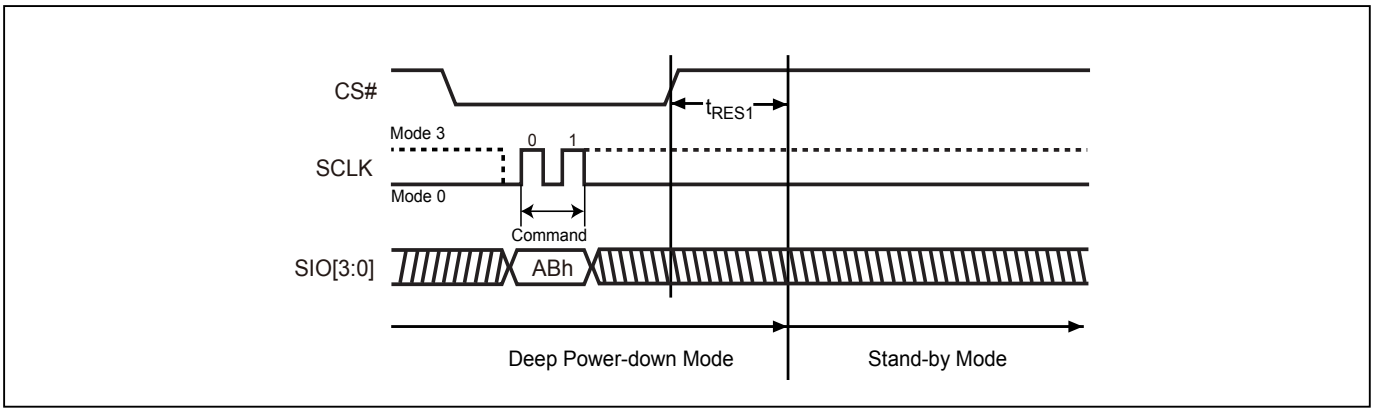

9-5. Read Electronic Manufacturer ID & Device ID (REMS)

The REMS instruction is an alternative to the Release from Power-down/Device ID instruction that provides both the JEDEC assigned manufacturer ID and the specific device ID.

The REMS instruction is very similar to the Release from Power-down/Device ID instruction. The instruction is initiated by driving the CS# pin low and shift the instruction code "90h" followed by two dummy bytes and one bytes address (A7~A0). After which, the Manufacturer ID for Macronix (C2h) and the Device ID are shifted out on the falling edge of SCLK with most significant bit (MSB) first. The Device ID values are listed in *"Table 6. ID Definitions"*. If the one-byte address is initially set to 01h, then the device ID will be read first and then followed by the Manufacturer ID. The Manufacturer and Device IDs can be read continuously, alternating from one to the other. The instruction is completed by driving CS# high.

Figure 17. Read Electronic Manufacturer & Device ID (REMS) Sequence (SPI Mode only)

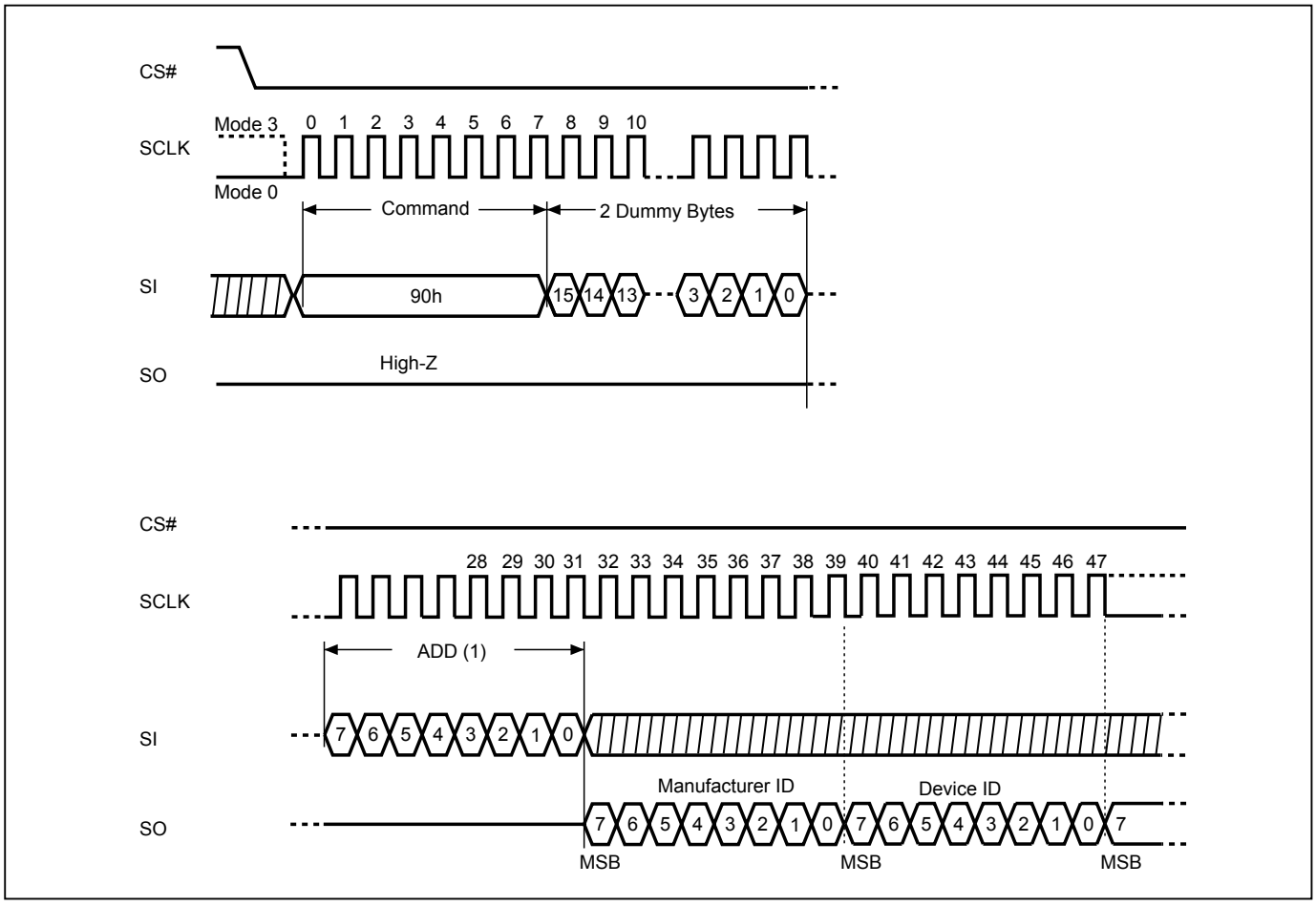

Notes:
(1) ADD=00H will output the manufacturer's ID first and ADD=01H will output device ID first.

9-6. QPI ID Read (QPIID)

User can execute this QPIID Read instruction to identify the Device ID and Manufacturer ID. The sequence of issue QPIID instruction is CS# goes low→sending QPI ID instruction→Data out on SO→CS# goes high. Most significant bit (MSB) first.

After the command cycle, the device will immediately output data on the falling edge of SCLK. The manufacturer ID, memory type, and device ID data byte will be output continuously, until the CS# goes high.

Table 6. ID Definitions

Command Type		MX25L25645G		
RDID	9Fh	Manufactory ID	Memory type	Memory density
		C2	20	19
RES	ABh	Electronic ID		
		18		
REMS	90h	Manufactory ID	Device ID	
		C2	18	
QPIID	AFh	Manufactory ID	Memory type	Memory density
		C2	20	19

9-7. Read Status Register (RDSR)

The RDSR instruction is for reading Status Register Bits. The Read Status Register can be read at any time (even in program/erase/write status register condition). It is recommended to check the Write in Progress (WIP) bit before sending a new instruction when a program, erase, or write status register operation is in progress.

The sequence of issuing RDSR instruction is: CS# goes low→ sending RDSR instruction code→ Status Register data out on SO.

Both SPI (8 clocks) and QPI (2 clocks) command cycle can accept by this instruction. The SIO[3:1] are don't care when during SPI mode.

Figure 18. Read Status Register (RDSR) Sequence (SPI Mode)

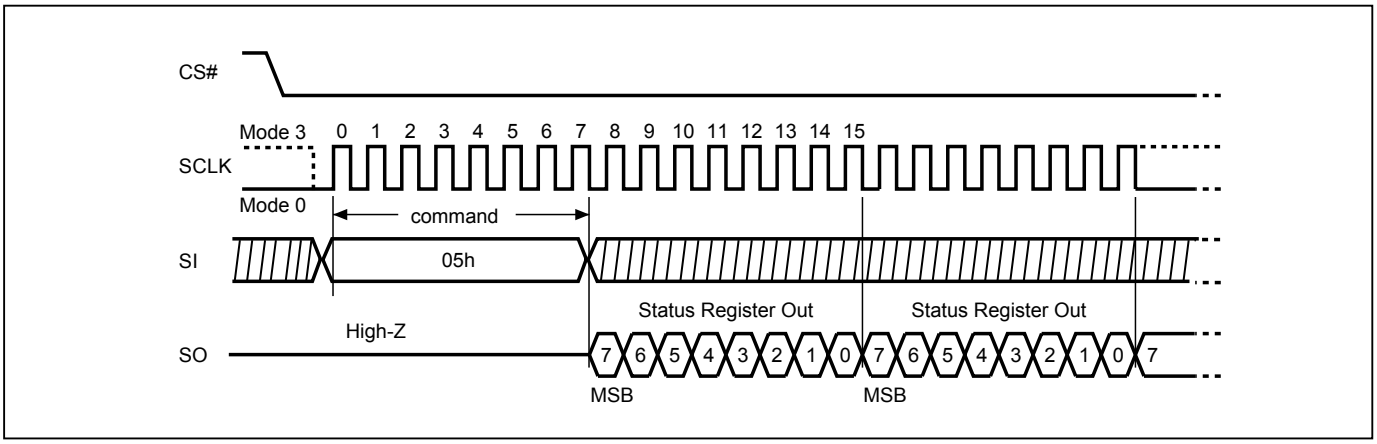

Figure 19. Read Status Register (RDSR) Sequence (QPI Mode)

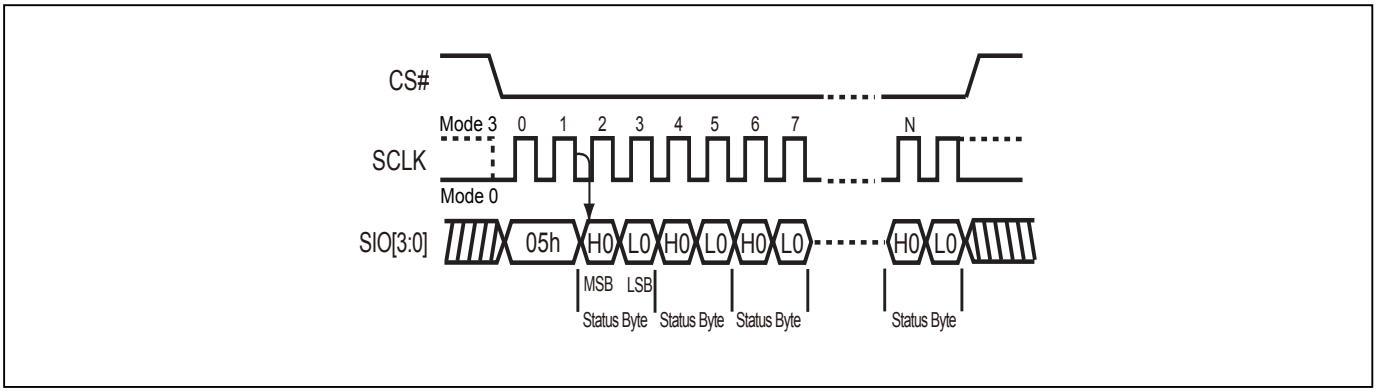

9-8. Read Configuration Register (RDCR)

The RDCR instruction is for reading Configuration Register Bits. The Read Configuration Register can be read at any time (even in program/erase/write configuration register condition). It is recommended to check the Write in Progress (WIP) bit before sending a new instruction when a program, erase, or write configuration register operation is in progress.

The sequence of issuing RDCR instruction is: CS# goes low→ sending RDCR instruction code→ Configuration Register data out on SO.

Both SPI (8 clocks) and QPI (2 clocks) command cycle can accept by this instruction. The SIO[3:1] are don't care when during SPI mode.

Figure 20. Read Configuration Register (RDCR) Sequence (SPI Mode)

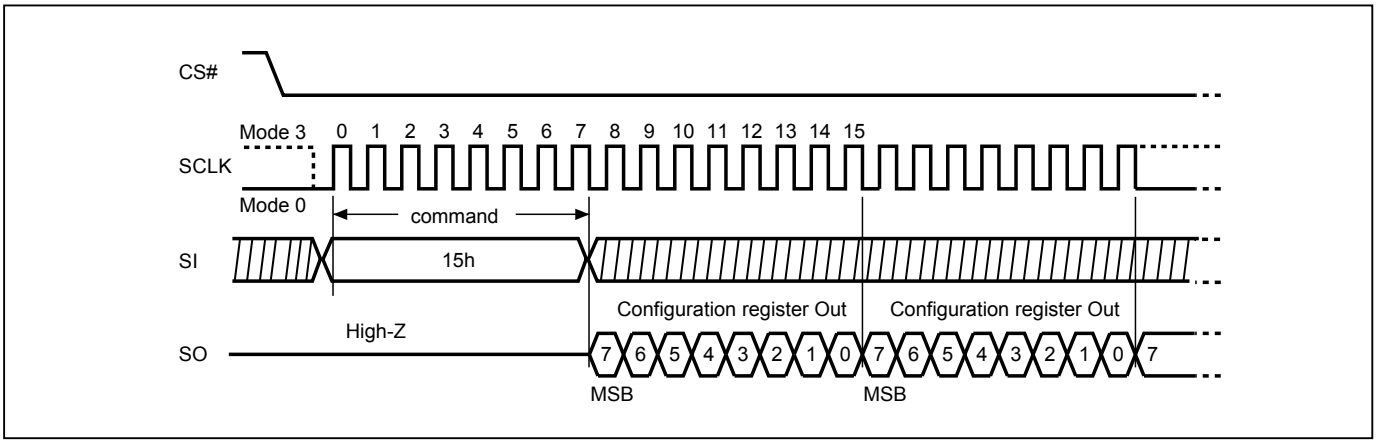

Figure 21. Read Configuration Register (RDCR) Sequence (QPI Mode)

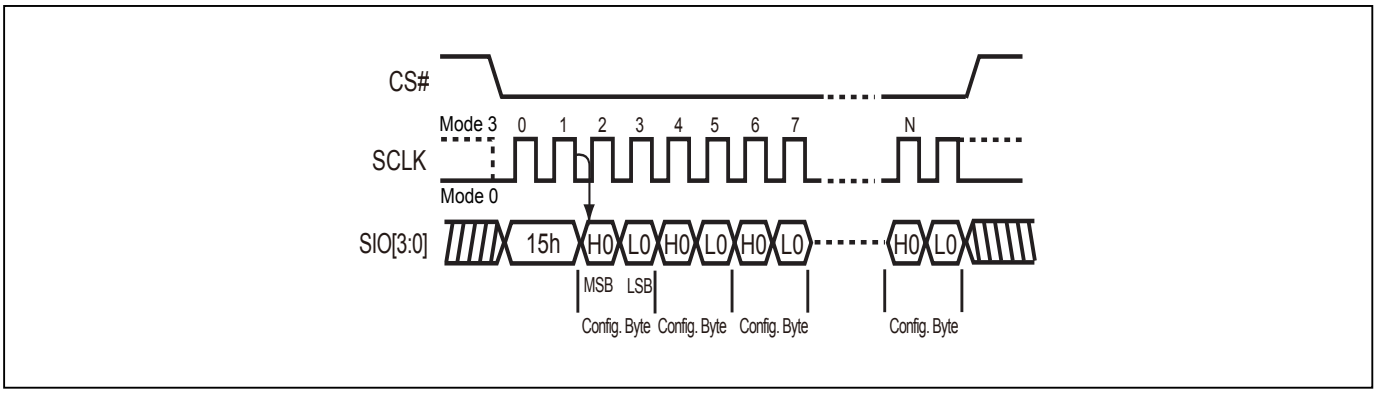

For user to check if Program/Erase operation is finished or not, RDSR instruction flow are shown as follows:

Figure 22. Program/Erase flow with read array data

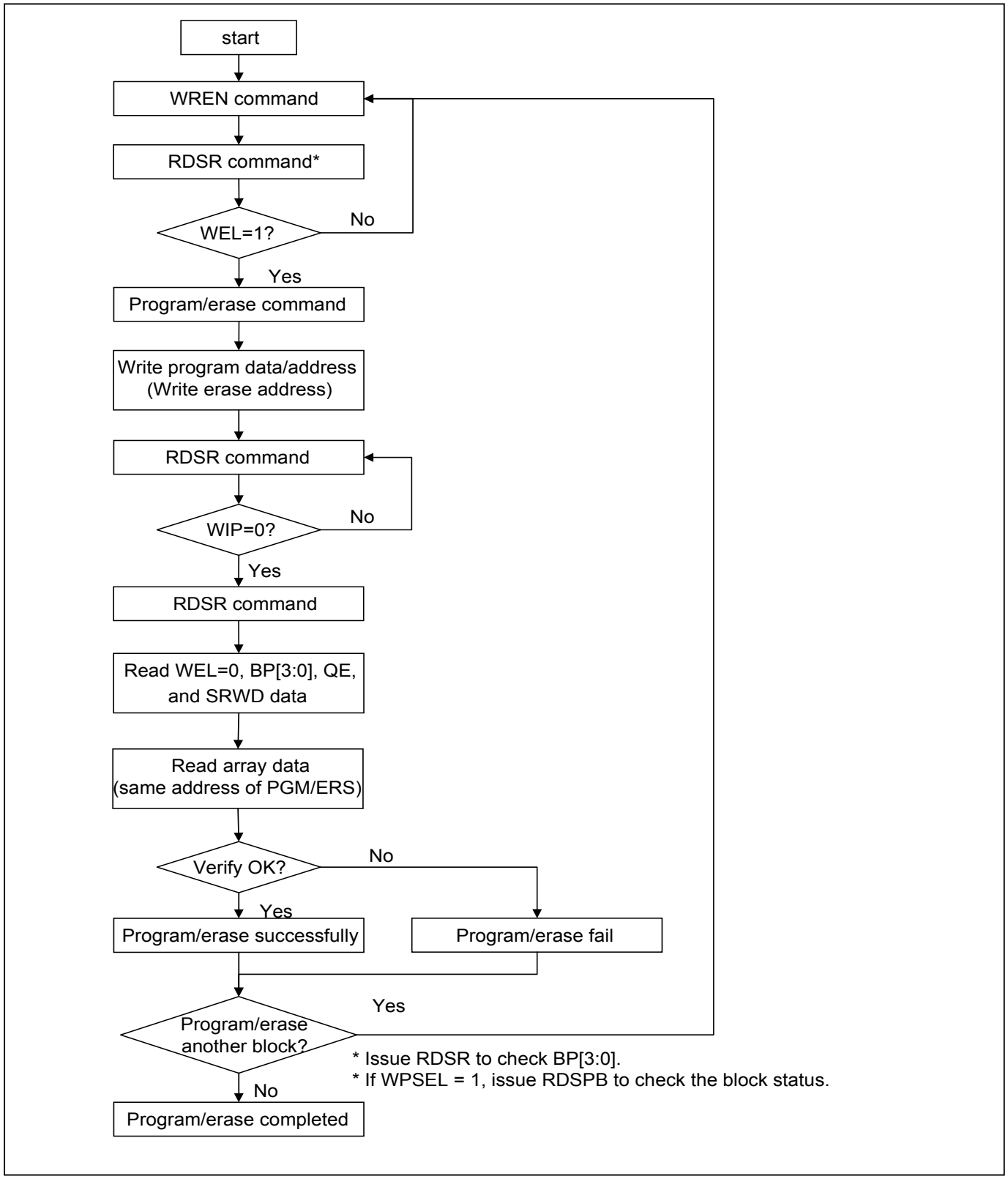

Figure 23. Program/Erase flow without read array data (read P_FAIL/E_FAIL flag)

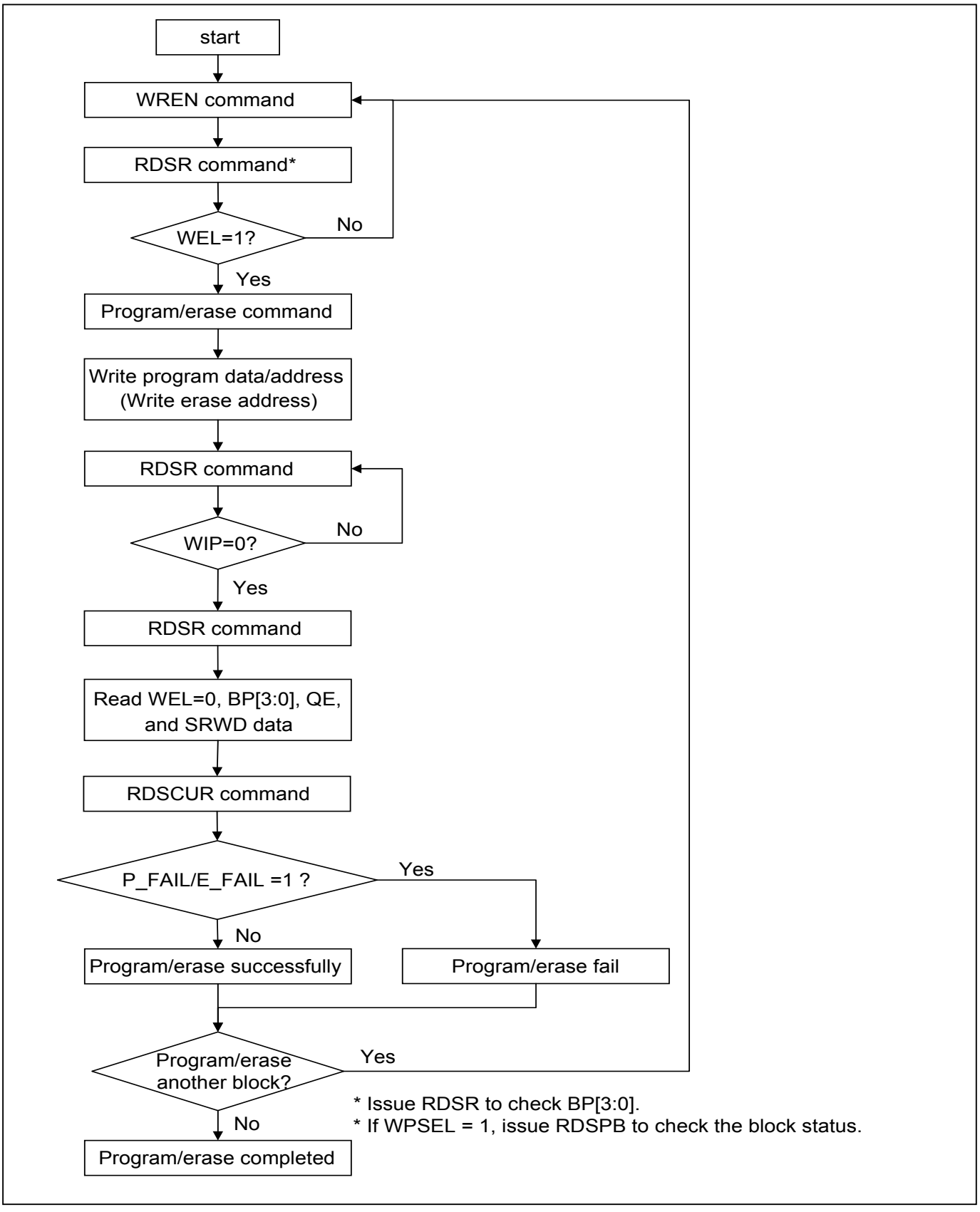

Status Register

The definition of the status register bits is as below:

WIP bit. The Write in Progress (WIP) bit, a volatile bit, indicates whether the device is busy in program/erase/write status register progress. When WIP bit sets to 1, which means the device is busy in program/erase/write status register progress. When WIP bit sets to 0, which means the device is not in progress of program/erase/write status register cycle.

WEL bit. The Write Enable Latch (WEL) bit, a volatile bit, indicates whether the device is set to internal write enable latch. When WEL bit sets to 1, which means the internal write enable latch is set, the device can accept program/erase/write status register instruction. When WEL bit sets to 0, which means no internal write enable latch; the device will not accept program/erase/write status register instruction. The program/erase command will be ignored if it is applied to a protected memory area. To ensure both WIP bit & WEL bit are both set to 0 and available for next program/erase/operations, WIP bit needs to be confirm to be 0 before polling WEL bit. After WIP bit confirmed, WEL bit needs to be confirm to be 0.

BP3, BP2, BP1, BP0 bits. The Block Protect (BP3, BP2, BP1, BP0) bits, non-volatile bits, indicate the protected area (as defined in *"Table 2. Protected Area Sizes"*) of the device to against the program/erase instruction without hardware protection mode being set. To write the Block Protect (BP3, BP2, BP1, BP0) bits requires the Write Status Register (WRSR) instruction to be executed. Those bits define the protected area of the memory to against Page Program (PP), Sector Erase (SE), Block Erase 32KB (BE32K), Block Erase (BE) and Chip Erase (CE) instructions (only if Block Protect bits (BP3:BP0) set to 0, the CE instruction can be executed). The BP3, BP2, BP1, BP0 bits are "0" as default. Which is un-protected.

QE bit. The Quad Enable (QE) bit, non-volatile bit, while it is "0" (factory default), it performs non-Quad and WP#, RESET# are enable. While QE is "1", it performs Quad I/O mode and WP#, RESET# are disabled. In the other word, if the system goes into four I/O mode (QE=1), the feature of HPM and RESET will be disabled.

SRWD bit. The Status Register Write Disable (SRWD) bit, non-volatile bit, is operated together with Write Protection (WP#/SIO2) pin for providing hardware protection mode. The hardware protection mode requires SRWD sets to 1 and WP#/SIO2 pin signal is low stage. In the hardware protection mode, the Write Status Register (WRSR) instruction is no longer accepted for execution and the SRWD bit and Block Protect bits (BP3, BP2, BP1, BP0) are read only. The SRWD bit defaults to be "0".

Status Register

bit7	bit6	bit5	bit4	bit3	bit2	bit1	bit0
SRWD (status register write protect)	QE (Quad Enable)	BP3 (level of protected block)	BP2 (level of protected block)	BP1 (level of protected block)	BP0 (level of protected block)	WEL (write enable latch)	WIP (write in progress bit)
1=status register write disable	1=Quad Enable 0=not Quad Enable	*(note 1)*	*(note 1)*	*(note 1)*	*(note 1)*	1=write enable 0=not write enable	1=write operation 0=not in write operation
Non-volatile bit	Non-volatile bit	Non-volatile bit	Non-volatile bit	Non-volatile bit	Non-volatile bit	volatile bit	volatile bit

Note 1: see the *Table 2* "Protected Area Size".

Configuration Register

The Configuration Register is able to change the default status of Flash memory. Flash memory will be configured after the CR bit is set.

ODS bit
The output driver strength (ODS1, ODS0) bits are volatile bits, which indicate the output driver level (as defined in *"Output Driver Strength Table"*) of the device. The Output Driver Strength is defaulted as 30 Ohms when delivered from factory. To write the ODS bits requires the Write Status Register (WRSR) instruction to be executed.

TB bit
The Top/Bottom (TB) bit is a non-volatile OTP bit. The Top/Bottom (TB) bit is used to configure the Block Protect area by BP bit (BP3, BP2, BP1, BP0), starting from TOP or Bottom of the memory array. The TB bit is defaulted as “0”, which means Top area protect. When it is set as “1”, the protect area will change to Bottom area of the memory device. To write the TB bits requires the Write Status Register (WRSR) instruction to be executed.

4BYTE Indicator bit
By writing EN4B instruction, the 4BYTE bit may be set as "1" to access the address length of 32-bit for memory area of higher density (large than 128Mb). The default state is "0" as the 24-bit address mode. The 4BYTE bit may be cleared by power-off or writing EX4B instruction to reset the state to be "0".

Table 7. Configuration Register

bit7	bit6	bit5	bit4	bit3	bit2	bit1	bit0
DC1 (Dummy cycle 1)	DC0 (Dummy cycle 0)	4 BYTE	Reserved	TB (top/bottom selected)	Reserved	ODS 1 (output driver strength)	ODS 0 (output driver strength)
(Note 2)	(Note 2)	0=3-byte address mode 1=4-byte address mode (Default=0)	x	0=Top area protect 1=Bottom area protect (Default=0)	x	(Note 1)	(Note 1)
volatile bit	volatile bit	volatile bit	x	OTP	x	volatile bit	volatile bit

Note 1: see *"Output Driver Strength Table"*
Note 2: see *"Dummy Cycle and Frequency Table (MHz)"*

Output Driver Strength Table

ODS1	ODS0	Description	Note
0	0	tCLQV=8ns (Default)	loading: 30pF
0	1	tCLQV=10ns	
1	0	tCLQV=16ns	
1	1	tCLQV=6ns	

Dummy Cycle and Frequency Table (MHz)

(STR Mode)

DC[1:0]	Numbers of Dummy clock cycles	Fast Read	Dual Output Fast Read	Quad Output Fast Read
00 (default)	8	120/133R	120/133R	120/133R
01	8	120/133R	120/133R	120/133R
10	8	120/133R	120/133R	120/133R
11	8	120/133R	120/133R	120/133R

DC[1:0]	Numbers of Dummy clock cycles	Dual IO Fast Read
00 (default)	4	80
01	8	120/133R
10	4	80
11	8	120/133R

DC[1:0]	Numbers of Dummy clock cycles	Quad IO Fast Read
00 (default)	6	80
01	4	54
10	8	84/104R
11	10	120/133R

(DTR Mode)

DC[1:0]	Numbers of Dummy clock cycles	Quad IO DTR Read
00 (default)	6	54
01	6	54
10	8	70/80R
11	10	84/100R

Note: "R" mean VCC range= 3.0V-3.6V.

9-9. Write Status Register (WRSR)

The WRSR instruction is for changing the values of Status Register Bits and Configuration Register Bits. Before sending WRSR instruction, the Write Enable (WREN) instruction must be decoded and executed to set the Write Enable Latch (WEL) bit in advance. The WRSR instruction can change the value of Block Protect (BP3, BP2, BP1, BP0) bits to define the protected area of memory (as shown in *Table 2*). The WRSR also can set or reset the Quad enable (QE) bit and set or reset the Status Register Write Disable (SRWD) bit in accordance with Write Protection (WP#/SIO2) pin signal, but has no effect on bit1(WEL) and bit0 (WIP) of the status register. The WRSR instruction cannot be executed once the Hardware Protected Mode (HPM) is entered.

The sequence of issuing WRSR instruction is: CS# goes low→ sending WRSR instruction code→ Status Register data on SI→CS# goes high.

The CS# must go high exactly at the 8 bits or 16 bits data boundary; otherwise, the instruction will be rejected and not executed. The self-timed Write Status Register cycle time (tW) is initiated as soon as Chip Select (CS#) goes high. The Write in Progress (WIP) bit still can be check out during the Write Status Register cycle is in progress. The WIP sets 1 during the tW timing, and sets 0 when Write Status Register Cycle is completed, and the Write Enable Latch (WEL) bit is reset.

Figure 24. Write Status Register (WRSR) Sequence (SPI Mode)

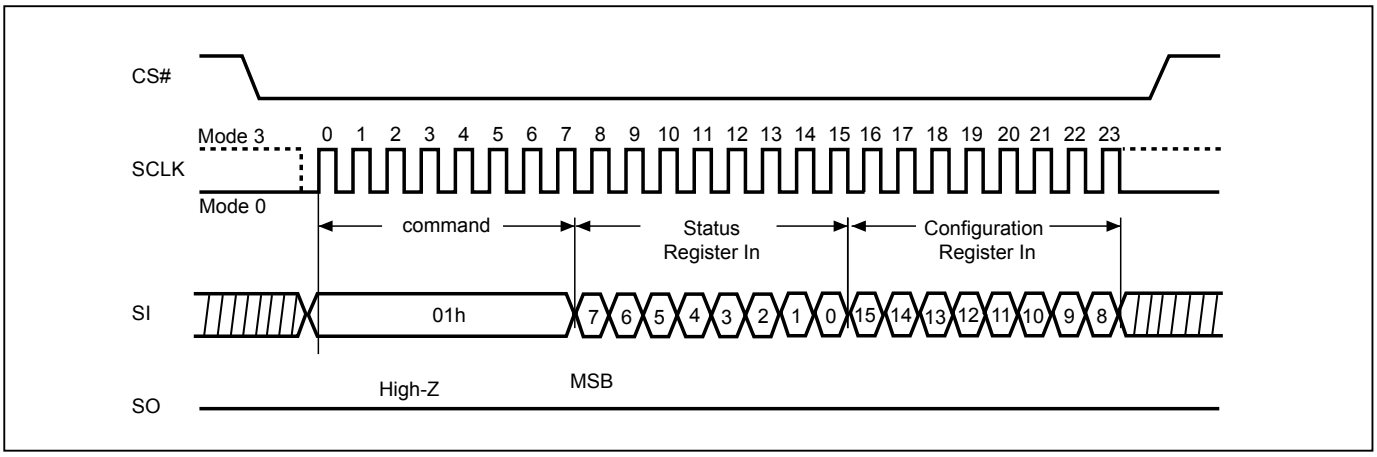

Note : The CS# must go high exactly at 8 bits or 16 bits data boundary to completed the write register command.

Figure 25. Write Status Register (WRSR) Sequence (QPI Mode)

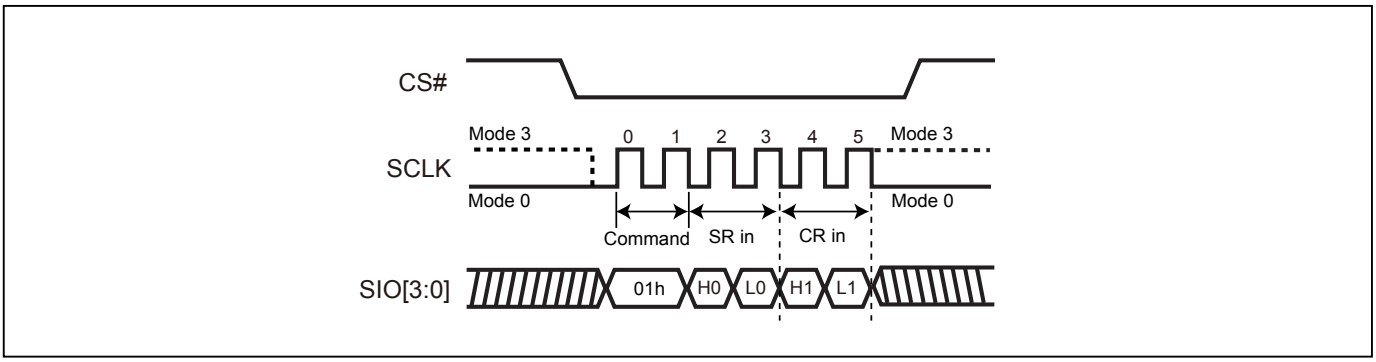

Software Protected Mode (SPM):

- When SRWD bit=0, no matter WP#/SIO2 is low or high, the WREN instruction may set the WEL bit and can change the values of SRWD, BP3, BP2, BP1, BP0. The protected area, which is defined by BP3, BP2, BP1, BP0 and T/B bit, is at software protected mode (SPM).
- When SRWD bit=1 and WP#/SIO2 is high, the WREN instruction may set the WEL bit can change the values of SRWD, BP3, BP2, BP1, BP0. The protected area, which is defined by BP3, BP2, BP1, BP0 and T/B bit, is at software protected mode (SPM)

Note:

If SRWD bit=1 but WP#/SIO2 is low, it is impossible to write the Status Register even if the WEL bit has previously been set. It is rejected to write the Status Register and not be executed.

Hardware Protected Mode (HPM):

- When SRWD bit=1, and then WP#/SIO2 is low (or WP#/SIO2 is low before SRWD bit=1), it enters the hardware protected mode (HPM). The data of the protected area is protected by software protected mode by BP3, BP2, BP1, BP0 and T/B bit and hardware protected mode by the WP#/SIO2 to against data modification.

Note:

To exit the hardware protected mode requires WP#/SIO2 driving high once the hardware protected mode is entered. If the WP#/SIO2 pin is permanently connected to high, the hardware protected mode can never be entered; only can use software protected mode via BP3, BP2, BP1, BP0 and T/B bit.
If the system enter QPI or set QE=1, the feature of HPM will be disabled.

Table 8. Protection Modes

Mode	Status register condition	WP# and SRWD bit status	Memory
Software protection mode (SPM)	Status register can be written in (WEL bit is set to "1") and the SRWD, BP0-BP3 bits can be changed	WP#=1 and SRWD bit=0, or WP#=0 and SRWD bit=0, or WP#=1 and SRWD=1	The protected area cannot be program or erase.
Hardware protection mode (HPM)	The SRWD, BP0-BP3 of status register bits cannot be changed	WP#=0, SRWD bit=1	The protected area cannot be program or erase.

Note:

1. As defined by the values in the Block Protect (BP3, BP2, BP1, BP0) bits of the Status Register, as shown in *Table 2*.

Figure 26. WRSR flow

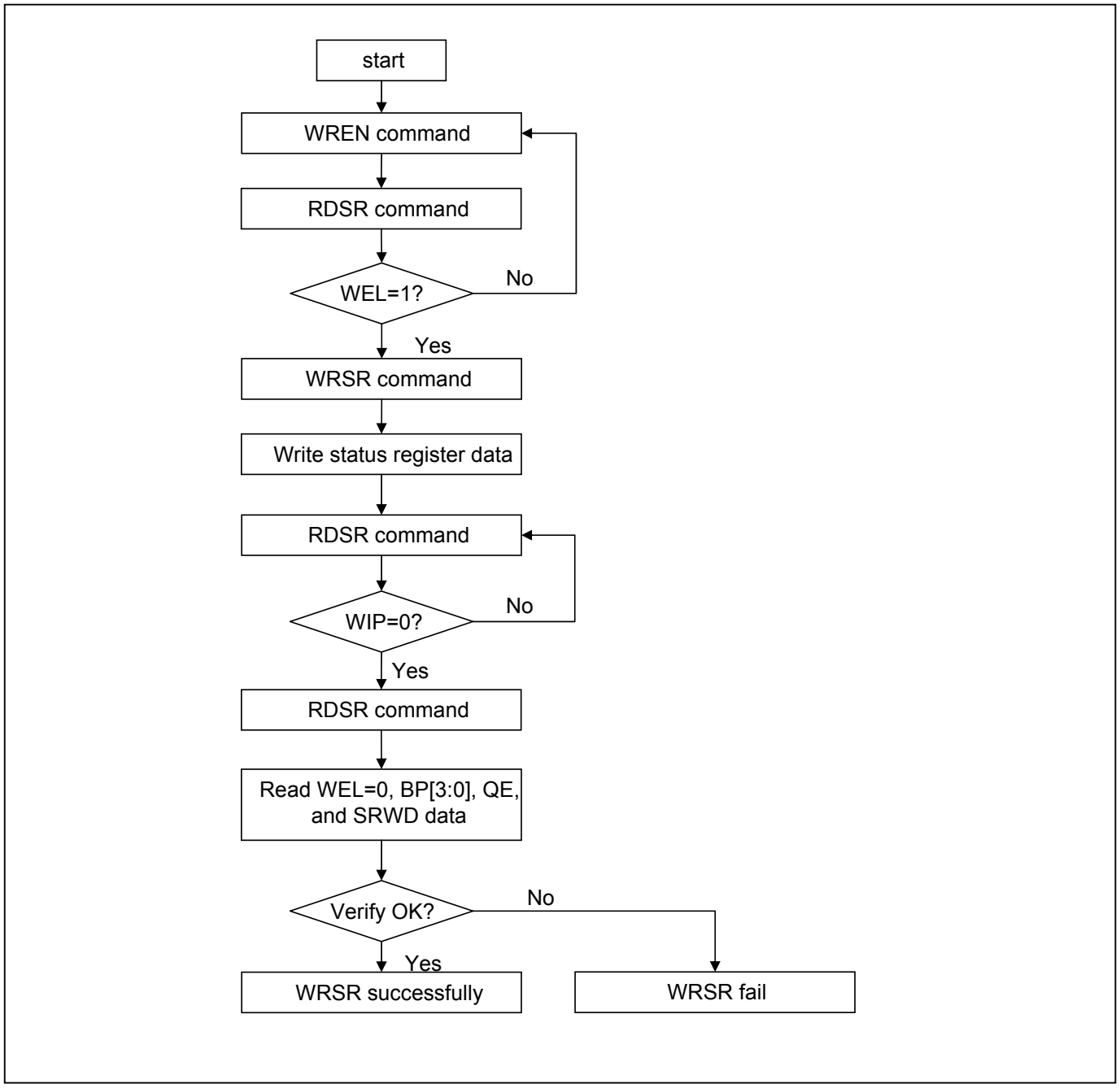

Figure 27. WP# Setup Timing and Hold Timing during WRSR when SRWD=1

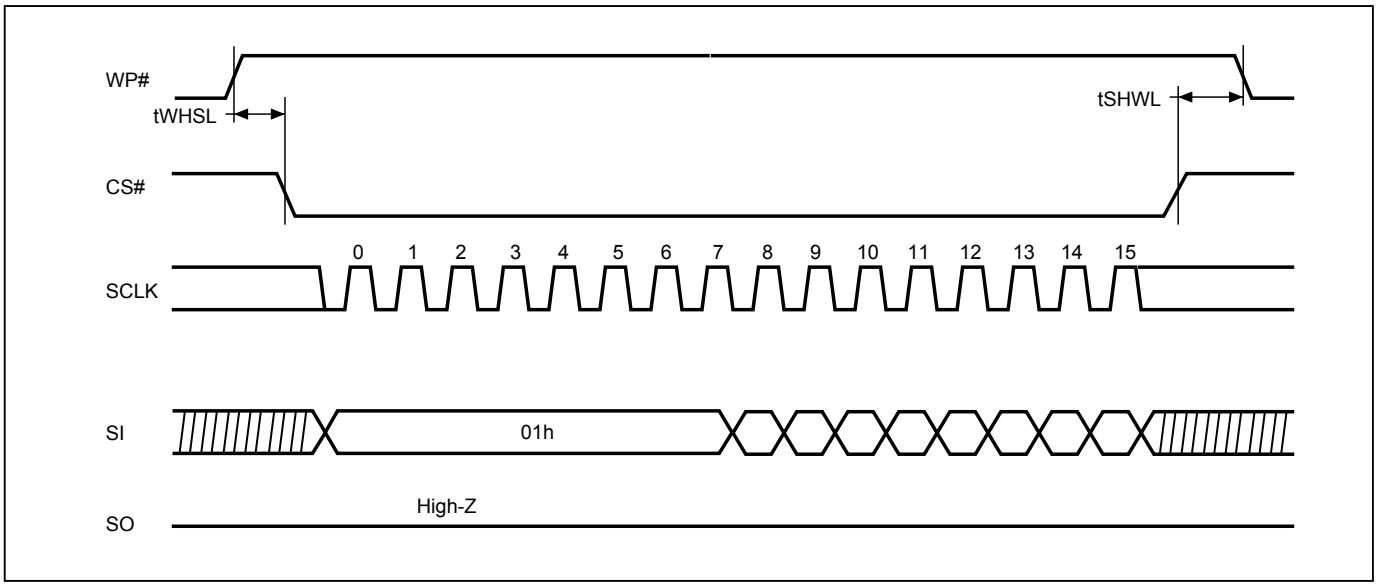

Note: WP# must be kept high until the embedded operation finish.

9-10. Enter 4-byte mode (EN4B)

The EN4B instruction enables accessing the address length of 32-bit for the memory area of higher density (larger than 128Mb). The device default is in 24-bit address mode; after sending out the EN4B instruction, the bit5 (4BYTE bit) of security register will be automatically set to "1" to indicate the 4-byte address mode has been enabled. Once the 4-byte address mode is enabled, the address length becomes 32-bit instead of the default 24-bit. There are three methods to exit the 4-byte mode: writing exit 4-byte mode (EX4B) instruction, Reset or power-off.

All instructions are accepted normally, and just the address bit is changed from 24-bit to 32-bit.

The following commands don't support 4byte address: 4READ for top 128Mb (EAh), RDSFDP, RES and REMS.

The sequence of issuing EN4B instruction is: CS# goes low → sending EN4B instruction to enter 4-byte mode(automatically set 4BYTE bit as "1") → CS# goes high.

9-11. Exit 4-byte mode (EX4B)

The EX4B instruction is executed to exit the 4-byte address mode and return to the default 3-bytes address mode. After sending out the EX4B instruction, the bit5 (4BYTE bit) of Configuration register will be cleared to be "0" to indicate the exit of the 4-byte address mode. Once exiting the 4-byte address mode, the address length will return to 24-bit.

The sequence of issuing EX4B instruction is: CS# goes low → sending EX4B instruction to exit 4-byte mode (automatically clear the 4BYTE bit to be "0") → CS# goes high.

9-12. Read Data Bytes (READ)

The read instruction is for reading data out. The address is latched on rising edge of SCLK, and data shifts out on the falling edge of SCLK at a maximum frequency fR. The first address byte can be at any location. The address is automatically increased to the next higher address after each byte data is shifted out, so the whole memory can be read out at a single READ instruction. The address counter rolls over to 0 when the highest address has been reached.

The default read mode is 3-byte address, to access higher address (4-byte address) which requires to enter the 4-byte address read mode or to define EAR bit. To enter the 4-byte mode, please refer to the *"9-10. Enter 4-byte mode (EN4B)"* section.

The sequence of issuing READ instruction is: CS# goes low→sending READ instruction code→ 3-byte or 4-byte address on SI→ data out on SO→to end READ operation can use CS# to high at any time during data out.

Figure 28. Read Data Bytes (READ) Sequence (SPI Mode only)

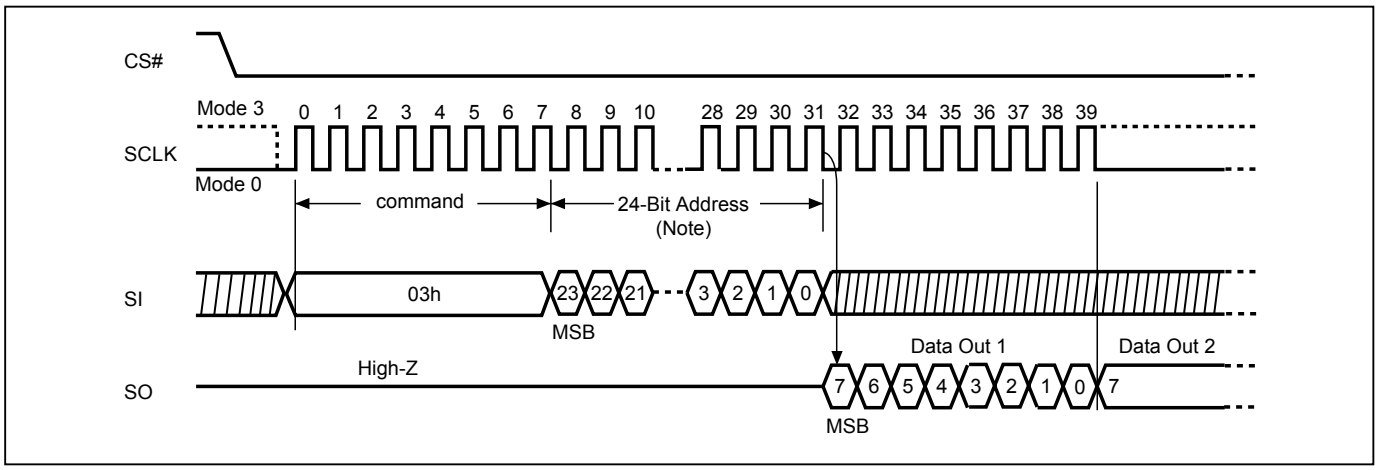

Note: Please note the address cycles above are based on 3-byte address mode. For 4-byte address mode, the address cycles will be increased.

9-13. Read Data Bytes at Higher Speed (FAST_READ)

The FAST_READ instruction is for quickly reading data out. The address is latched on rising edge of SCLK, and data of each bit shifts out on the falling edge of SCLK at a maximum frequency fC. The first address byte can be at any location. The address is automatically increased to the next higher address after each byte data is shifted out, so the whole memory can be read out at a single FAST_READ instruction. The address counter rolls over to 0 when the highest address has been reached.

The default read mode is 3-byte address, to access higher address (4-byte address) which requires to enter the 4-byte address read mode or to define EAR bit. To enter the 4-byte mode, please refer to the *"9-10. Enter 4-byte mode (EN4B)"* section.

Read on SPI Mode The sequence of issuing FAST_READ instruction is: CS# goes low→ sending FAST_READ instruction code→ 3-byte or 4-byte address on SI→ 8 dummy cycles (default)→ data out on SO→ to end FAST_READ operation can use CS# to high at any time during data out.

While Program/Erase/Write Status Register cycle is in progress, FAST_READ instruction is rejected without any impact on the Program/Erase/Write Status Register current cycle.

Figure 29. Read at Higher Speed (FAST_READ) Sequence (SPI Mode)

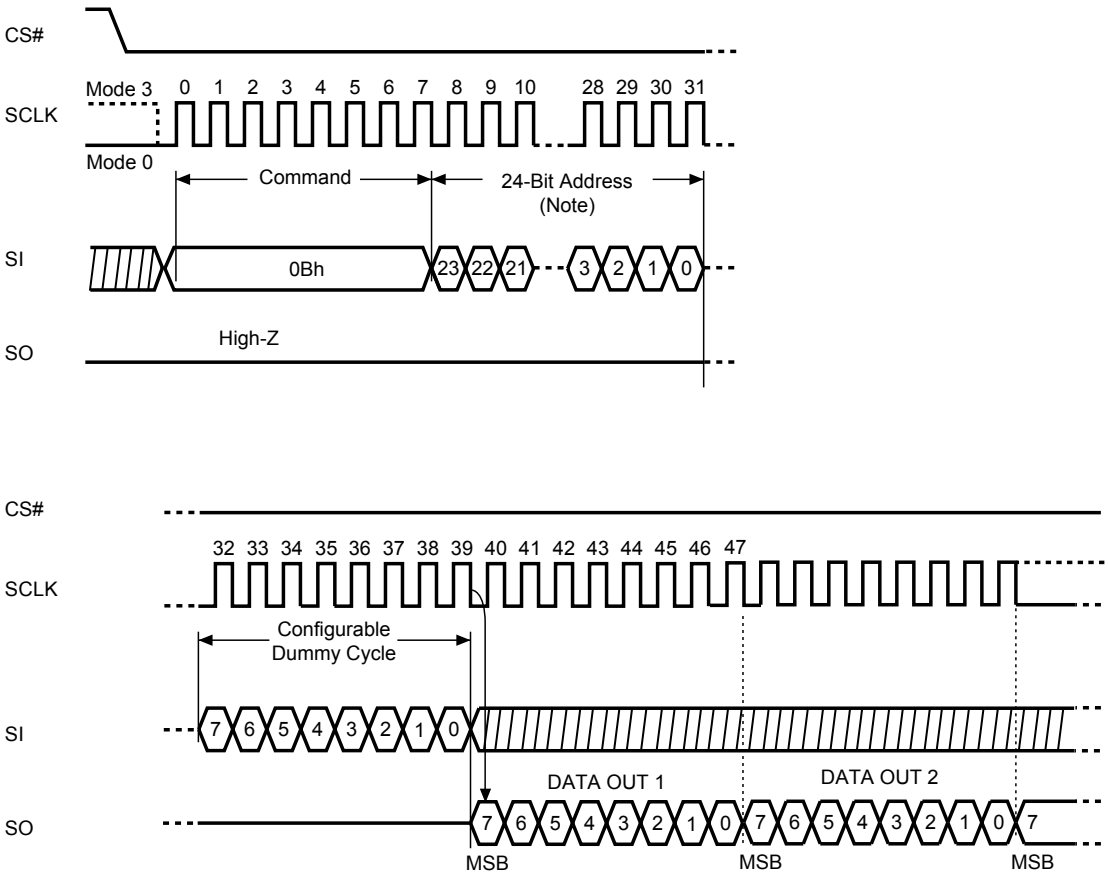

Note: Please note the address cycles above are based on 3-byte address mode. For 4-byte address mode, the address cycles will be increased.

9-14. Dual Output Read Mode (DREAD)

The DREAD instruction enable double throughput of Serial Flash in read mode. The address is latched on rising edge of SCLK, and data of every two bits (interleave on 2 I/O pins) shift out on the falling edge of SCLK at a maximum frequency fT. The first address byte can be at any location. The address is automatically increased to the next higher address after each byte data is shifted out, so the whole memory can be read out at a single DREAD instruction. The address counter rolls over to 0 when the highest address has been reached. Once writing DREAD instruction, the following data out will perform as 2-bit instead of previous 1-bit.

The default read mode is 3-byte address, to access higher address (4-byte address) which requires to enter the 4-byte address read mode or to define EAR bit. To enter the 4-byte mode, please refer to the *"9-10. Enter 4-byte mode (EN4B)"* section.

The sequence of issuing DREAD instruction is: CS# goes low→ sending DREAD instruction→3-byte or 4-byte address on SIO0→ 8 dummy cycles (default) on SIO0→ data out interleave on SIO1 & SIO0→ to end DREAD operation can use CS# to high at any time during data out.

While Program/Erase/Write Status Register cycle is in progress, DREAD instruction is rejected without any impact on the Program/Erase/Write Status Register current cycle.

Figure 30. Dual Read Mode Sequence

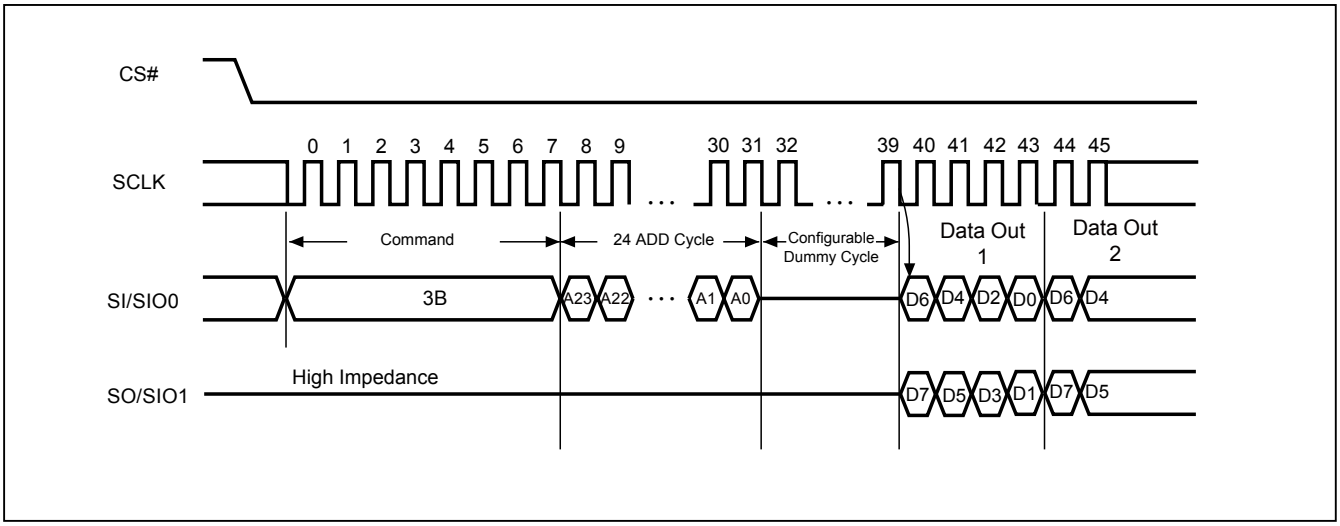

Notes:
1. Please note the above address cycles are base on 3-byte address mode, for 4-byte address mode, the address cycles will be increased.

9-15. 2 x I/O Read Mode (2READ)

The 2READ instruction enable double throughput of Serial Flash in read mode. The address is latched on rising edge of SCLK, and data of every two bits (interleave on 2 I/O pins) shift out on the falling edge of SCLK at a maximum frequency fT. The first address byte can be at any location. The address is automatically increased to the next higher address after each byte data is shifted out, so the whole memory can be read out at a single 2READ instruction. The address counter rolls over to 0 when the highest address has been reached. Once writing 2READ instruction, the following address/dummy/data out will perform as 2-bit instead of previous 1-bit.

The default read mode is 3-byte address, to access higher address (4-byte address) which requires to enter the 4-byte address read mode or to define EAR bit. To enter the 4-byte mode, please refer to the enter 4-byte mode (EN4B) Mode section.

The sequence of issuing 2READ instruction is: CS# goes low→ sending 2READ instruction→ 3-byte or 4-byte address interleave on SIO1 & SIO0→ 4 dummy cycles (default) on SIO1 & SIO0→ data out interleave on SIO1 & SIO0→ to end 2READ operation can use CS# to high at any time during data out.

While Program/Erase/Write Status Register cycle is in progress, 2READ instruction is rejected without any impact on the Program/Erase/Write Status Register current cycle.

Figure 31. 2 x I/O Read Mode Sequence (SPI Mode only)

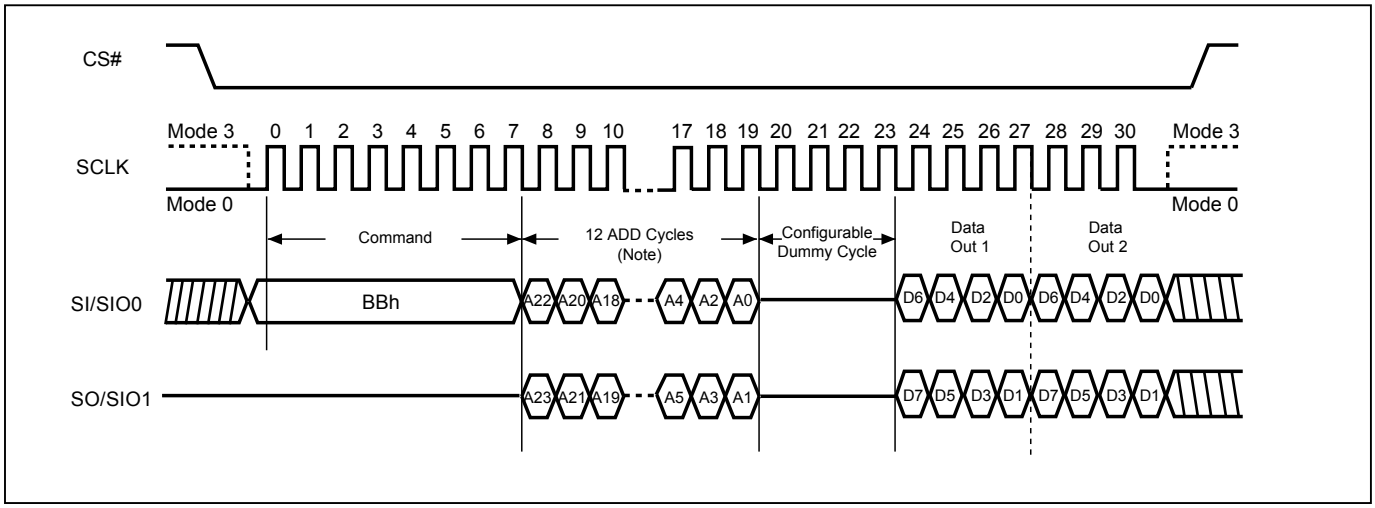

Note: Please note the address cycles above are based on 3-byte address mode. For 4-byte address mode, the address cycles will be increased.

9-16. Quad Read Mode (QREAD)

The QREAD instruction enable quad throughput of Serial Flash in read mode. The address is latched on rising edge of SCLK, and data of every four bits (interleave on 4 I/O pins) shift out on the falling edge of SCLK at a maximum frequency fQ. The first address byte can be at any location. The address is automatically increased to the next higher address after each byte data is shifted out, so the whole memory can be read out at a single QREAD instruction. The address counter rolls over to 0 when the highest address has been reached. Once writing QREAD instruction, the following data out will perform as 4-bit instead of previous 1-bit.

The default read mode is 3-byte address, to access higher address (4-byte address) which requires to enter the 4-byte address read mode or to define EAR bit. To enter the 4-byte mode, please refer to the enter 4-byte mode (EN4B) Mode section.

The sequence of issuing QREAD instruction is: CS# goes low→ sending QREAD instruction → 3-byte or 4-byte address on SI → 8 dummy cycle (Default) → data out interleave on SIO3, SIO2, SIO1 & SIO0→ to end QREAD operation can use CS# to high at any time during data out.

While Program/Erase/Write Status Register cycle is in progress, QREAD instruction is rejected without any impact on the Program/Erase/Write Status Register current cycle.

Figure 32. Quad Read Mode Sequence

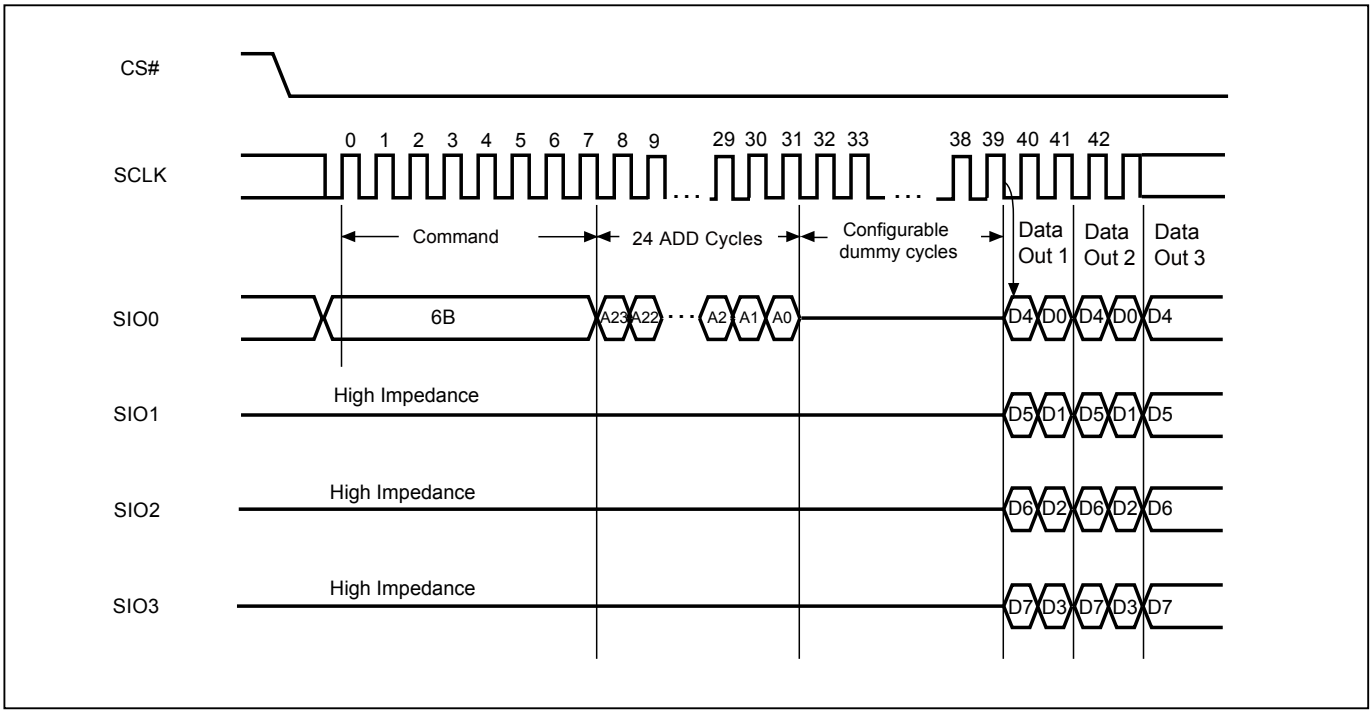

Notes:
1. Please note the above address cycles are base on 3-byte address mode, for 4-byte address mode, the address cycles will be increased.

9-17. 4 x I/O Read Mode (4READ)

The 4READ instruction enable quad throughput of Serial Flash in read mode. A Quad Enable (QE) bit of status Register must be set to "1" before sending the 4READ instruction. The address is latched on rising edge of SCLK, and data of every four bits (interleave on 4 I/O pins) shift out on the falling edge of SCLK at a maximum frequency fQ. The first address byte can be at any location. The address is automatically increased to the next higher address after each byte data is shifted out, so the whole memory can be read out at a single 4READ instruction. The address counter rolls over to 0 when the highest address has been reached. Once writing 4READ instruction, the following address/dummy/data out will perform as 4-bit instead of previous 1-bit.

The default read mode is 3-byte address, to access higher address (4-byte address) which requires to enter the 4-byte address read mode or to define EAR bit. To enter the 4-byte mode, please refer to the enter 4-byte mode (EN4B) Mode section.

4 x I/O Read on SPI Mode (4READ) The sequence of issuing 4READ instruction is: CS# goes low→ sending 4READ instruction→ 3-byte or 4-byte address interleave on SIO3, SIO2, SIO1 & SIO0→ 6 dummy cycles (Default) →data out interleave on SIO3, SIO2, SIO1 & SIO0→ to end 4READ operation can use CS# to high at any time during data out.

4 x I/O Read on QPI Mode (4READ) The 4READ instruction also support on QPI command mode. The sequence of issuing 4READ instruction QPI mode is: CS# goes low→ sending 4READ instruction→ 3-byte or 4-byte address interleave on SIO3, SIO2, SIO1 & SIO0→ 6 dummy cycles (Default) →data out interleave on SIO3, SIO2, SIO1 & SIO0→ to end 4READ operation can use CS# to high at any time during data out.

While Program/Erase/Write Status Register cycle is in progress, 4READ instruction is rejected without any impact on the Program/Erase/Write Status Register current cycle.

Figure 33. 4 x I/O Read Mode Sequence (SPI Mode)

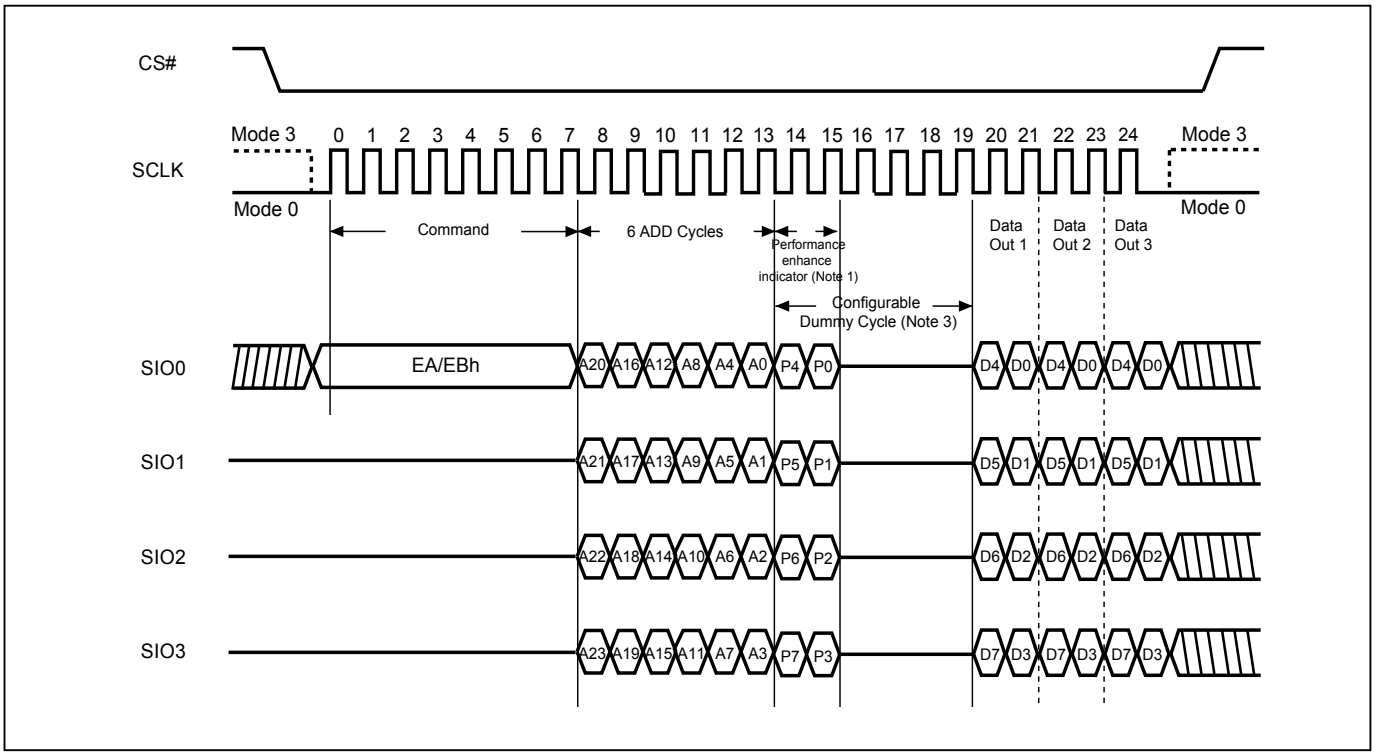

Notes:
1. Hi-impedance is inhibited for the two clock cycles.
2. P7≠P3, P6≠P2, P5≠P1 & P4≠P0 (Toggling) is inhibited.
3. Configuration Dummy cycle numbers will be different depending on the bit6 & bit 7 (DC0 & DC1) setting in configuration register.
4. Please note the address cycles above are based on 3-byte address mode. For 4-byte address mode, the address cycles will be increased.

Figure 34. 4 x I/O Read Mode Sequence (QPI Mode)

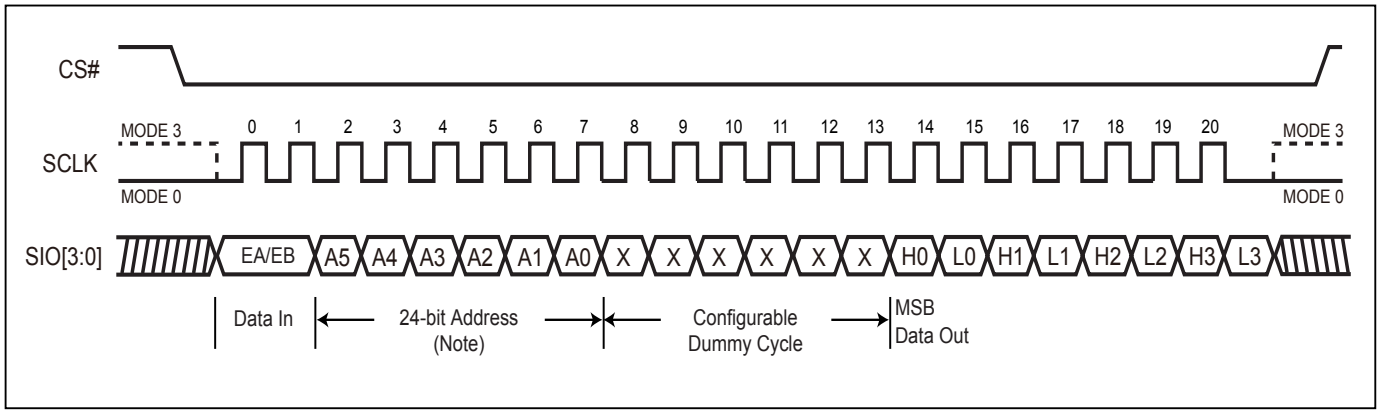

Note: Please note the address cycles above are based on 3-byte address mode. For 4-byte address mode, the address cycles will be increased.

9-18. 4 x I/O Double Transfer Rate Read Mode (4DTRD)

The 4DTRD instruction enables Double Transfer Rate throughput on quad I/O of Serial Flash in read mode. A Quad Enable (QE) bit of status Register must be set to "1" before sending the 4DTRD instruction. The address (interleave on 4 I/O pins) is latched on both rising and falling edge of SCLK, and data (interleave on 4 I/O pins) shift out on both rising and falling edge of SCLK. The 8-bit address can be latched-in at one clock, and 8-bit data can be read out at one clock, which means four bits at rising edge of clock, the other four bits at falling edge of clock. The first address byte can be at any location. The address is automatically increased to the next higher address after each byte data is shifted out, so the whole memory can be read out at a single 4DTRD instruction. The address counter rolls over to 0 when the highest address has been reached. Once writing 4DTRD instruction, the following address/dummy/data out will perform as 8-bit instead of previous 1-bit.

Both SPI (8 clocks) and QPI (2 clocks) command cycle can accept by this instruction. The SIO[3:1] are don't care when during SPI mode.

While Program/Erase/Write Status Register cycle is in progress, 4DTRD instruction is rejected without any impact on the Program/Erase/Write Status Register current cycle.

Figure 35. Fast Quad I/O DT Read (4DTRD) Sequence (SPI Mode)

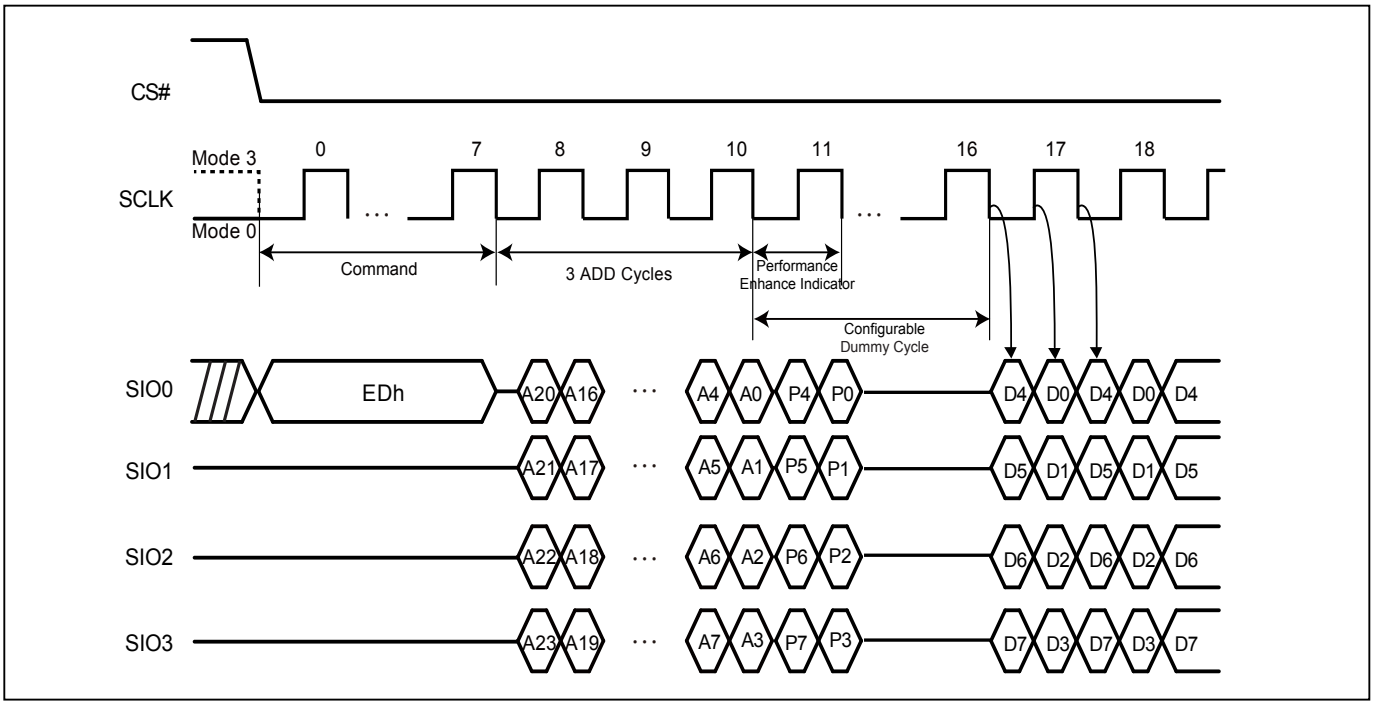

Notes:
1. Hi-impedance is inhibited for this clock cycle.
2. P7≠P3, P6≠P2, P5≠P1 & P4≠P0 (Toggling) will result in entering the performance enhance mode.
3. Configuration Dummy cycle numbers will be different depending on the bit6 & bit 7 (DC0 & DC1) setting in configuration register.
4. Please note the address cycles above are based on 3-byte address mode. For 4-byte address mode, the address cycles will be increased.

Figure 36. Fast Quad I/O DT Read (4DTRD) Sequence (QPI Mode)

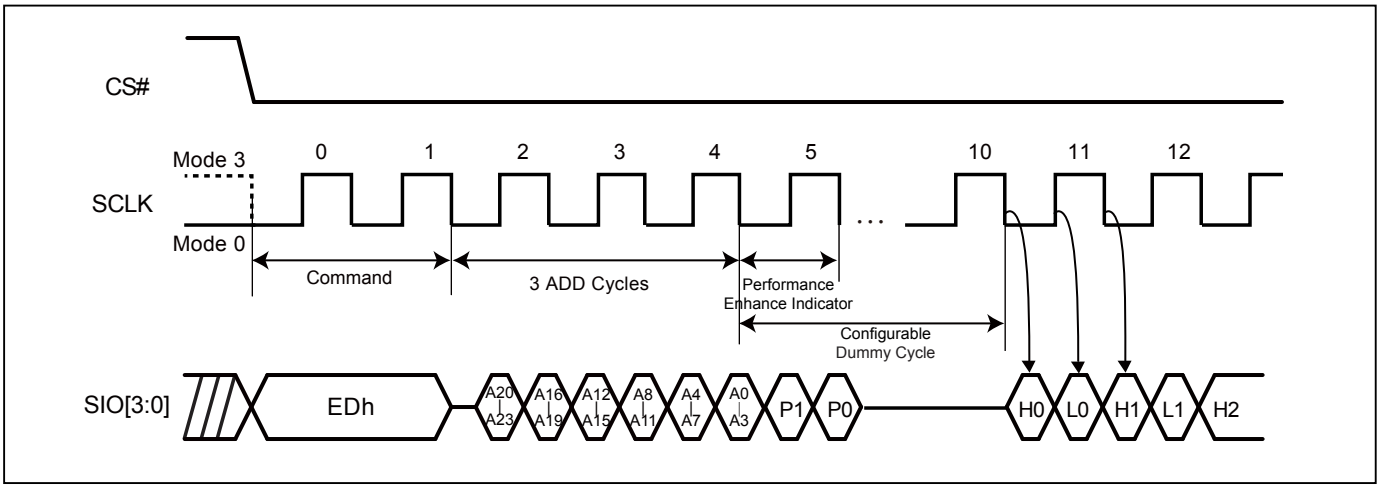

Notes:
1. Please note the address cycles above are based on 3-byte address mode. For 4-byte address mode, the address cycles will be increased.
2. Configuration Dummy cycle numbers will be different depending on the bit6 & bit 7 (DC0 & DC1) setting in configuration register.

9-19. 4 Byte Address Command Set

The operation of 4-byte address command set was very similar to original 3-byte address command set. The only different is all the 4-byte command set request 4-byte address (A31-A0) followed by instruction code. The command set support 4-byte address including: READ4B, Fast_Read4B, DREAD4B, 2READ4B, QREAD4B, 4READ4B, PP4B, 4PP4B, SE4B, BE32K4B, BE4B. Please note that it is not necessary to issue EN4B command before issuing any of 4-byte command set.

Figure 37. Read Data Bytes using 4 Byte Address Sequence (READ4B)

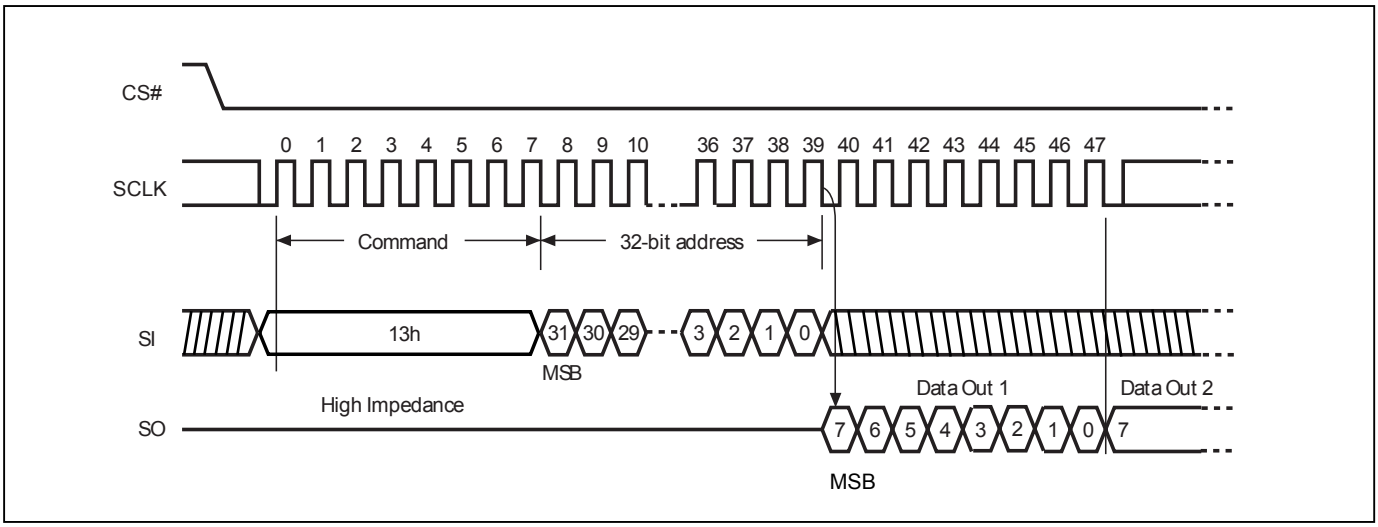

Figure 38. Read Data Bytes at Higher Speed using 4 Byte Address Sequence (FASTREAD4B)

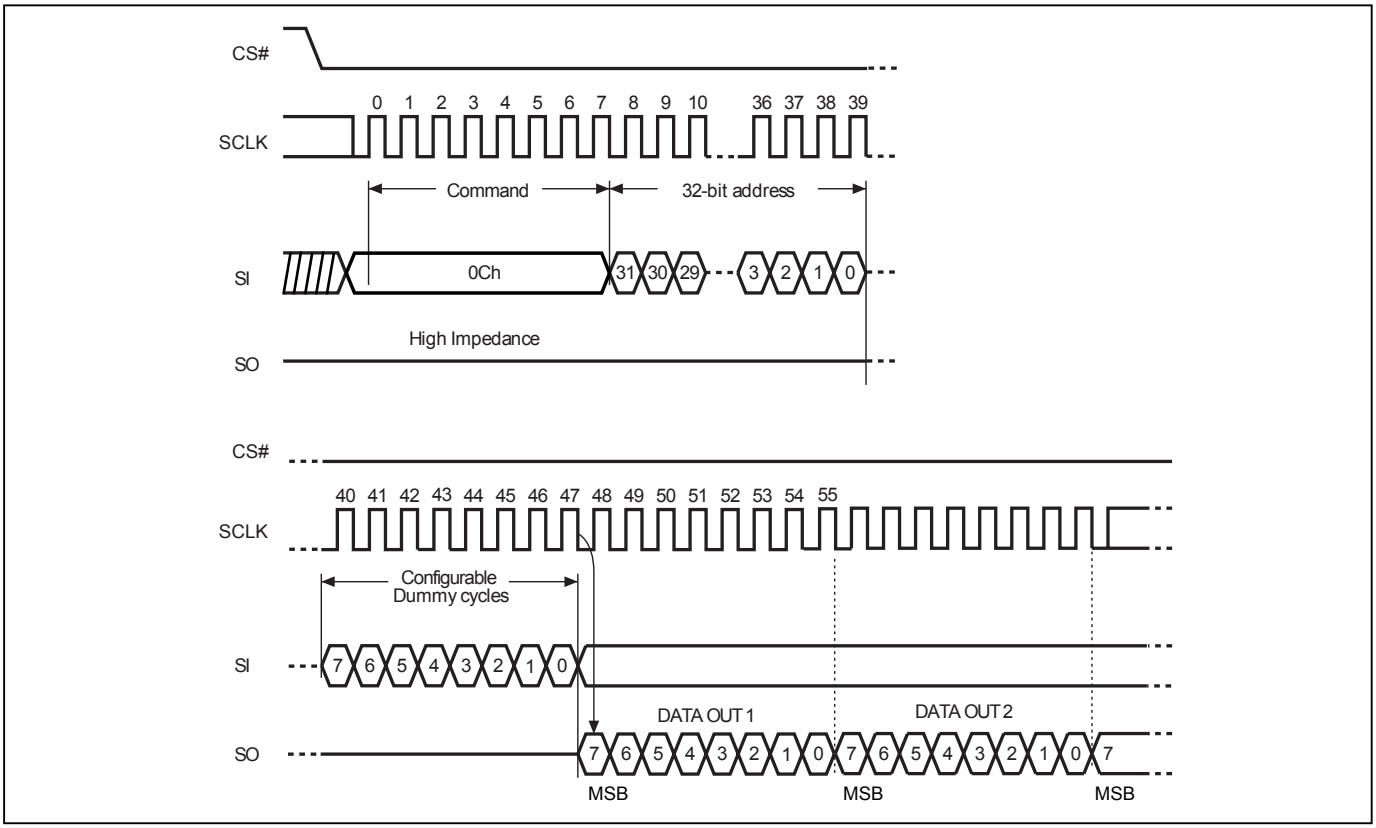

Figure 39. 2 x I/O Fast Read using 4 Byte Address Sequence (2READ4B)

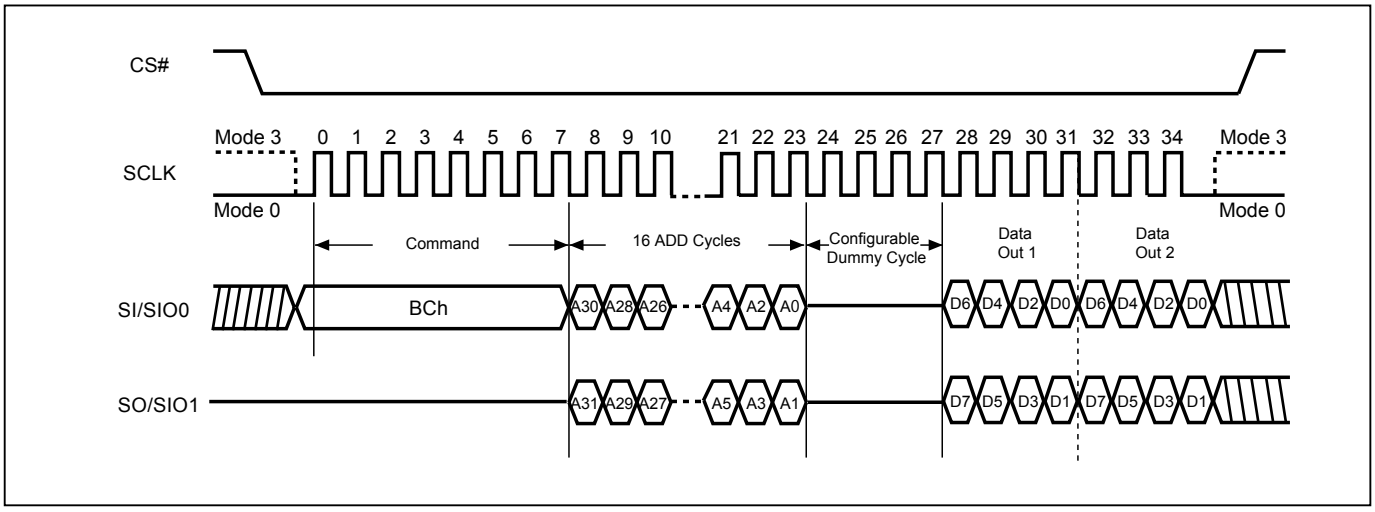

Figure 40. 4 I/O Fast Read using 4 Byte Address sequence (4READ4B)

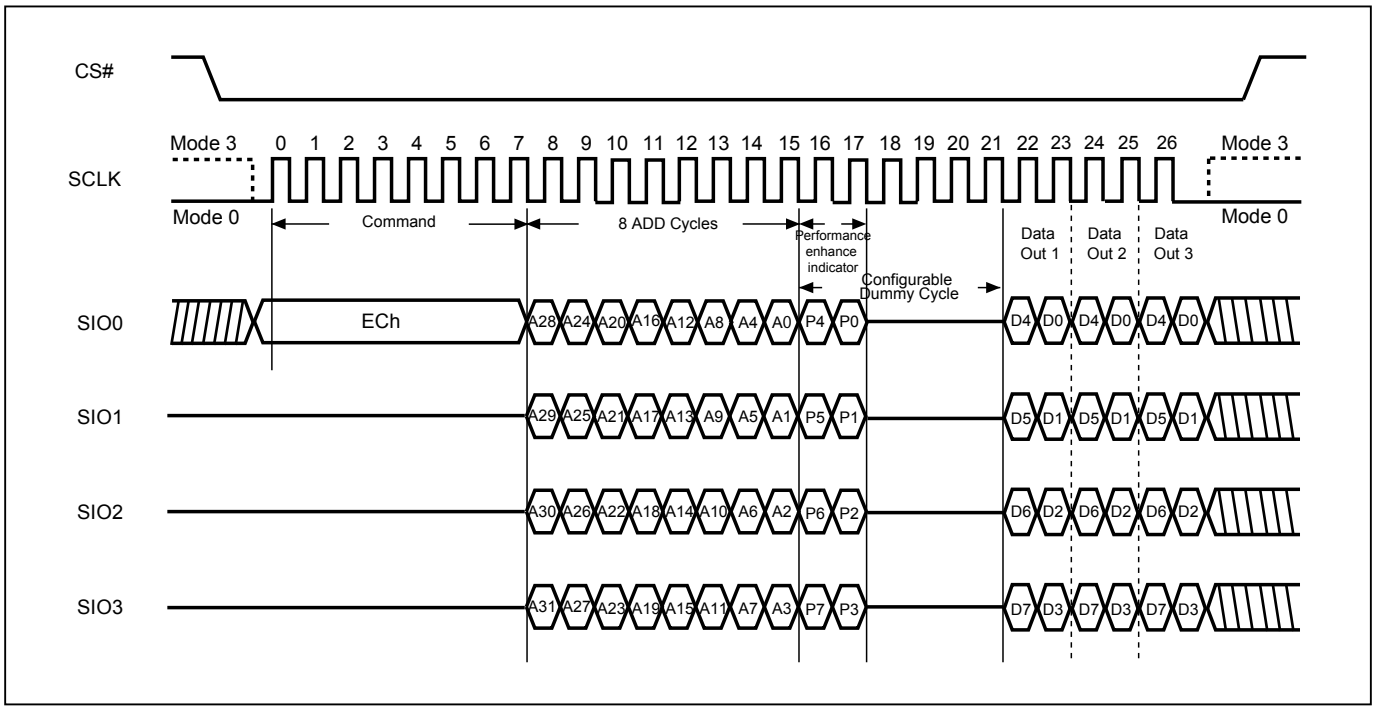

Figure 41. Fast Quad I/O DT Read (4DTRD4B) Sequence (SPI Mode)

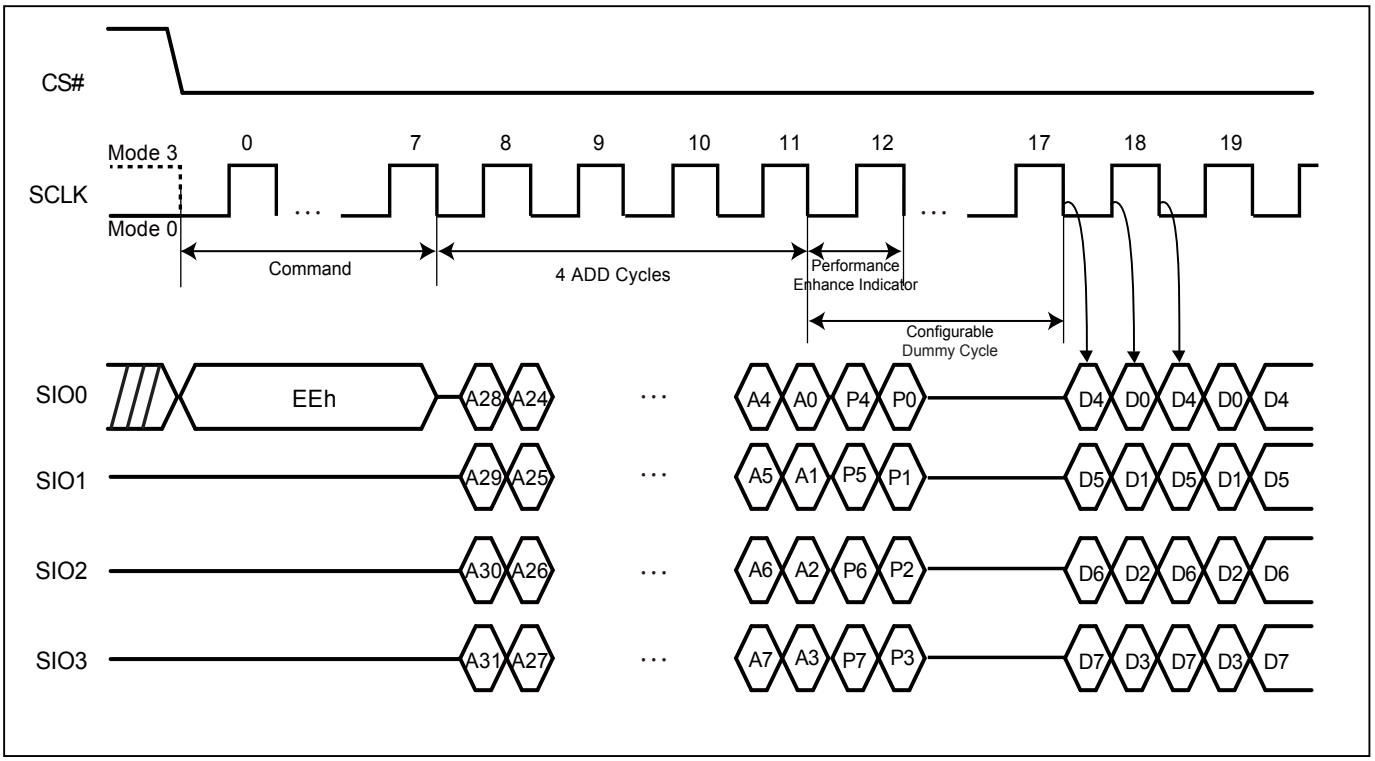

Note:
1. Configuration Dummy cycle numbers will be different depending on the bit6 & bit7 (DC0 & DC1) setting in configuration register.

Figure 42. Fast Quad I/O DT Read (4DTRD4B) Sequence (QPI Mode)

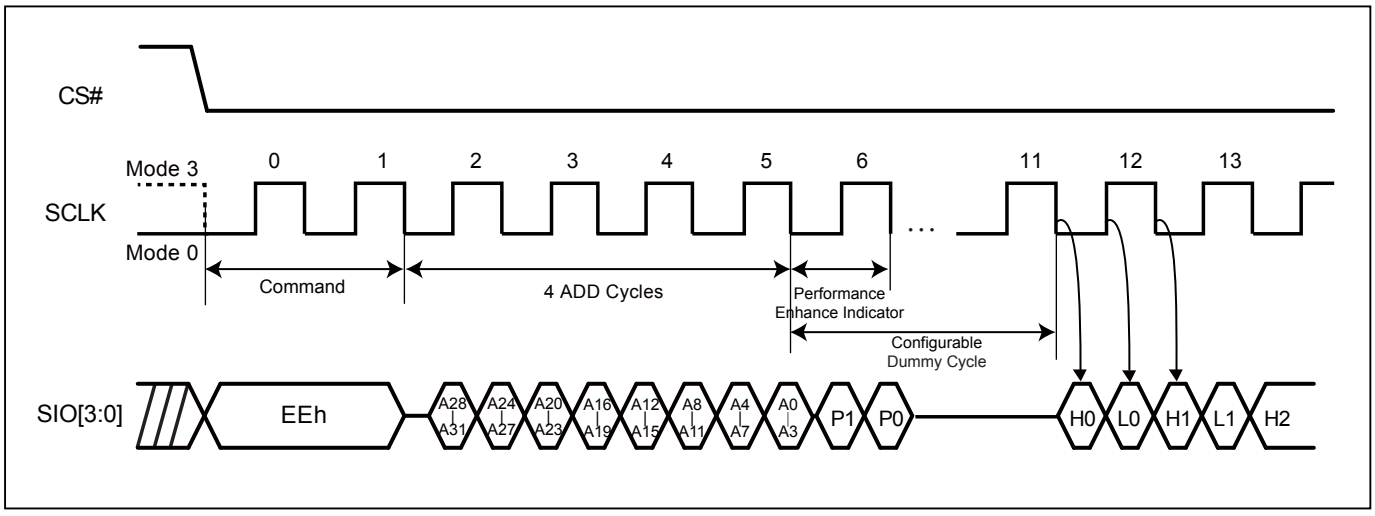

Note:
1. Configuration Dummy cycle numbers will be different depending on the bit6 & bit7 (DC0 & DC1) setting in configuration register.

9-20. Burst Read

This device supports Burst Read in both SPI and QPI mode.
To set the Burst length, following command operation is required to issue command: “C0h” in the first Byte (8-clocks), following 4 clocks defining wrap around enable with “0h” and disable with“1h”.

The next 4 clocks are to define wrap around depth. Their definitions are as the following table:

Data	Wrap Around	Wrap Depth
00h	Yes	8-byte
01h	Yes	16-byte
02h	Yes	32-byte
03h	Yes	64-byte
1xh	No	X

The wrap around unit is defined within the 256Byte page, with random initial address. It is defined as “wrap-around mode disable” for the default state of the device. To exit wrap around, it is required to issue another “C0” command in which data=‘1xh”. Otherwise, wrap around status will be retained until power down or reset command. To change wrap around depth, it is requried to issue another “C0” command in which data=“0xh”. QPI “EBh” and SPI “EBh” support wrap around feature after wrap around is enabled. Burst read is supported in both SPI and QPI mode. The device is default without Burst read.

Figure 43. SPI Mode

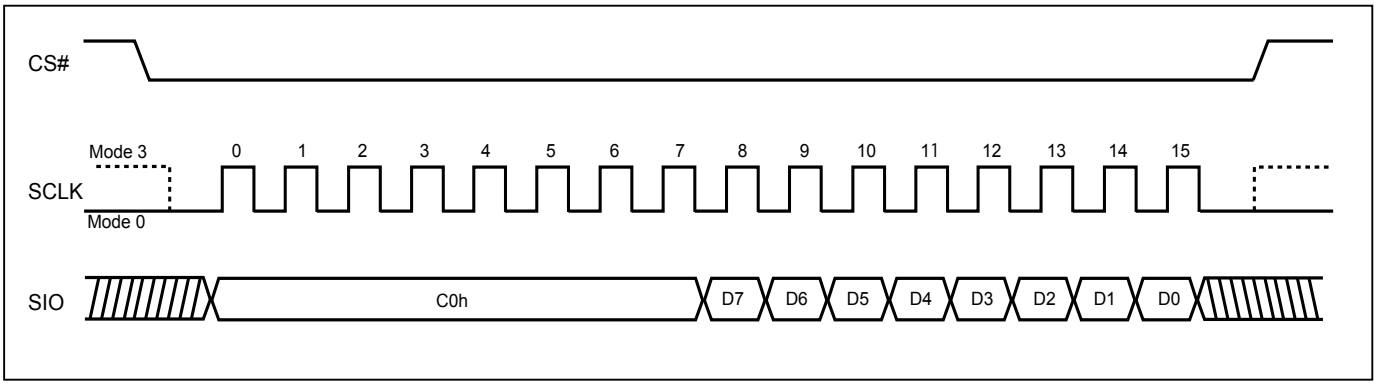

Figure 44. QPI Mode

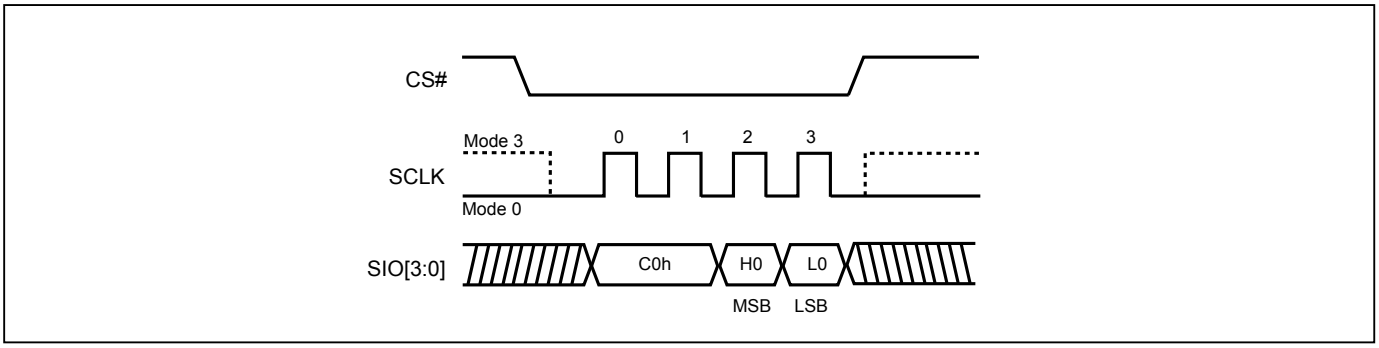

Note: MSB=Most Significant Bit
LSB=Least Significant Bit

9-21. Performance Enhance Mode

The device could waive the command cycle bits if the two cycle bits after address cycle toggles.

Performance enhance mode is supported in both SPI and QPI mode.

In QPI mode, “EBh” "ECh" and SPI “EBh” "ECh" commands support enhance mode. The performance enhance mode is not supported in dual I/O mode.

To enter performance-enhancing mode, P[7:4] must be toggling with P[3:0]; likewise P[7:0]=A5h, 5Ah, F0h or 0Fh can make this mode continue and skip the next 4READ instruction. To leave enhance mode, P[7:4] is no longer toggling with P[3:0]; likewise P[7:0]=FFh, 00h, AAh or 55h along with CS# is afterwards raised and then lowered. Issuing ”FFh” data cycle can also exit enhance mode. The system then will leave performance enhance mode and return to normal operation.

After entering enhance mode, following CS# go high, the device will stay in the read mode and treat CS# go low of the first clock as address instead of command cycle.

Another sequence of issuing 4READ instruction especially useful in random access is: CS# goes low→sending 4 READ instruction→3-bytes or 4-bytes address interleave on SIO3, SIO2, SIO1 & SIO0 →performance enhance toggling bit P[7:0]→ 4 dummy cycles (Default) →data out still CS# goes high → CS# goes low (reduce 4 Read instruction) → 3-bytes or 4-bytes random access address.

Figure 45. 4 x I/O Read enhance performance Mode Sequence (SPI Mode)

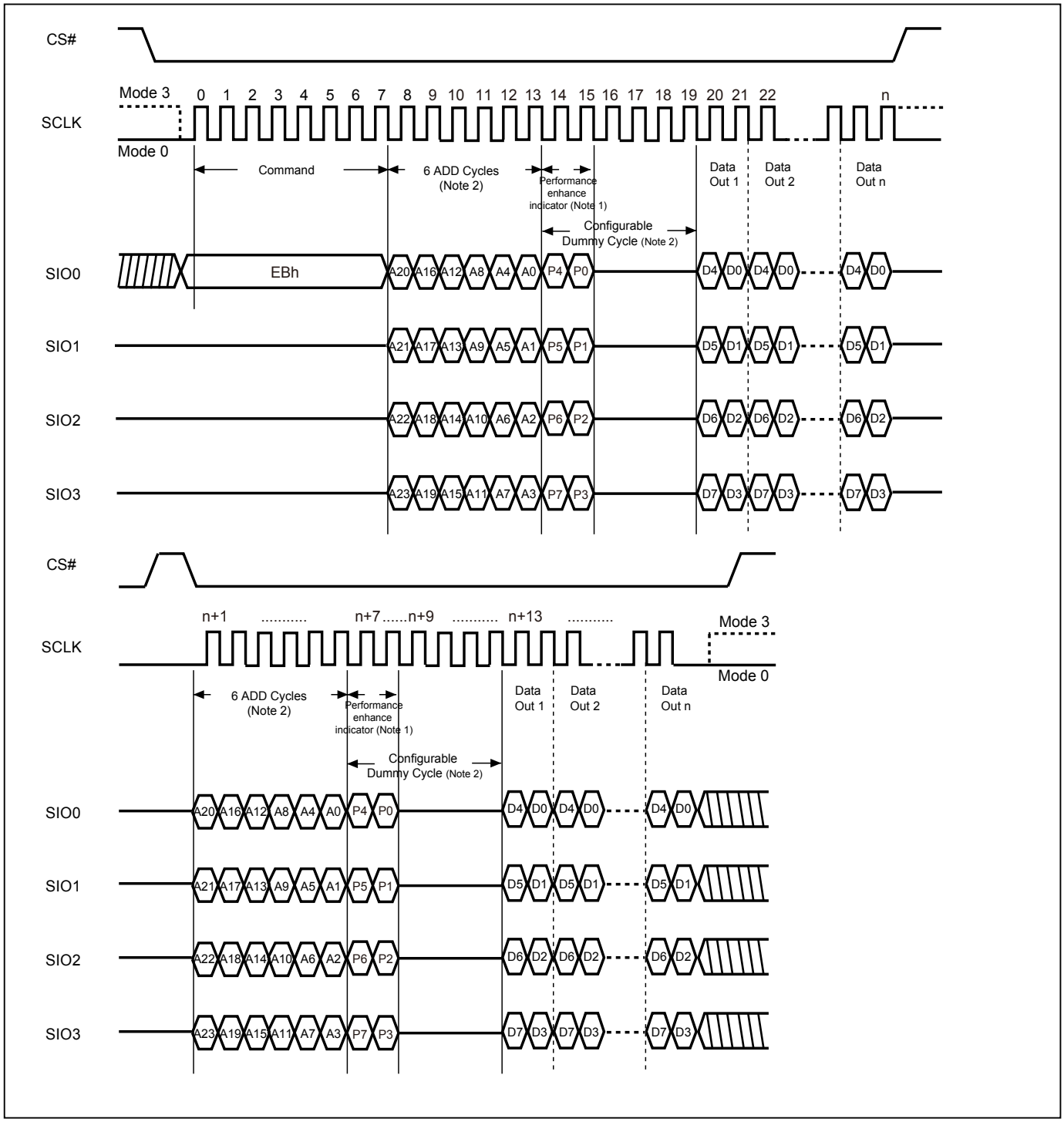

Notes:

1. If not using performance enhance recommend to keep 1 or 0 in performance enhance indicator.
2. Configuration Dummy cycle numbers will be different depending on the bit6 & bit 7 (DC0 & DC1) setting in configuration register.
3. Please note the address cycles above are based on 3-byte address mode. For 4-byte address mode, the address cycles will be increased.

Figure 46. 4 x I/O Read enhance performance Mode Sequence (QPI Mode)

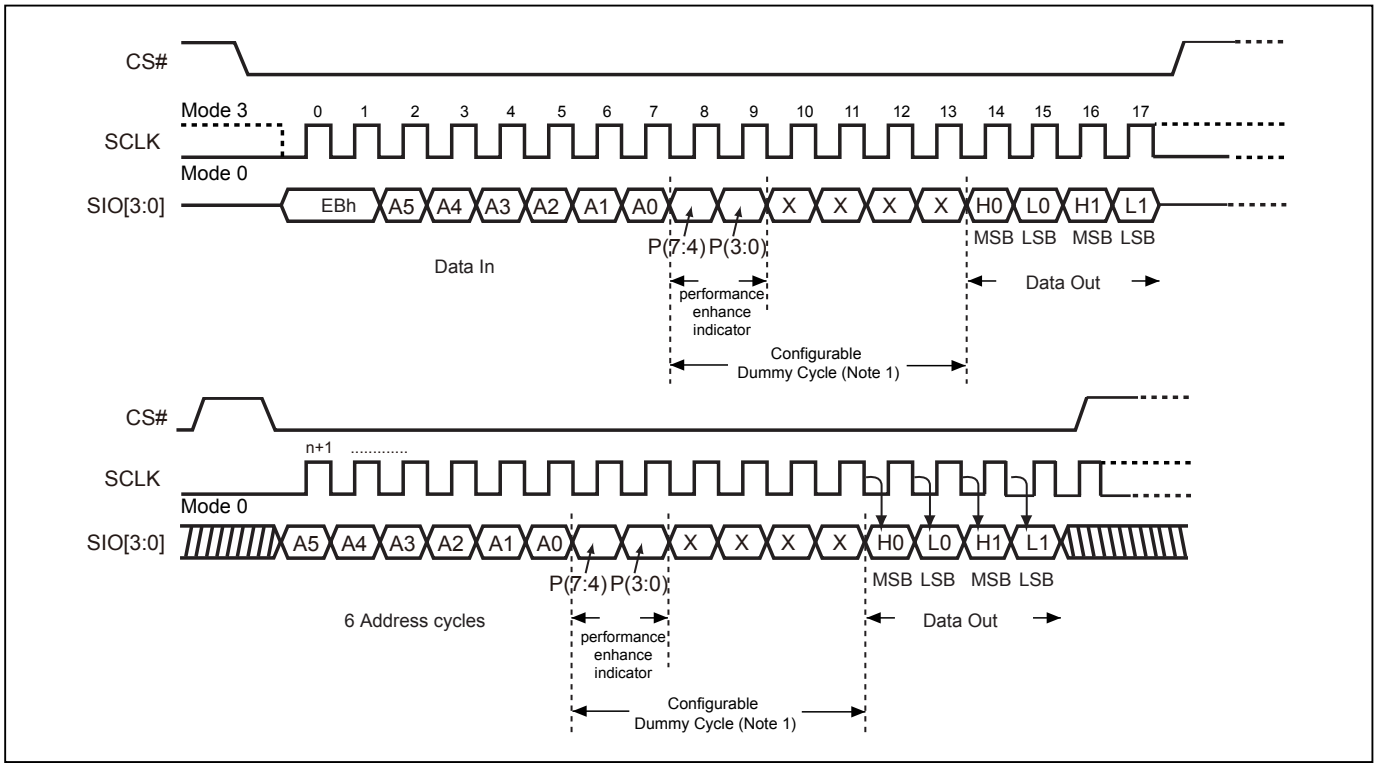

Notes:

1. Configuration Dummy cycle numbers will be different depending on the bit6 & bit 7 (DC0 & DC1) setting in configuration register.
2. Please note the address cycles above are based on 3-byte address mode. For 4-byte address mode, the address cycles will be increased.

9-22. Performance Enhance Mode Reset

To conduct the Performance Enhance Mode Reset operation in SPI mode, FFh data cycle(8 clocks in 3-byte address mode)/3FFh data cycle(10 clocks in 4-byte address mode), should be issued in 1I/O sequence. In QPI Mode, FFFFFFFFh data cycle(8 clocks in 3-byte address mode)/FFFFFFFFFFh data cycle (10 clocks in 4-byte address mode), in 4I/O should be issued.

If the system controller is being Reset during operation, the flash device will return to the standard SPI operation.

Both SPI (8 clocks) and QPI (2 clocks) command cycle can accept by this instruction. The SIO[3:1] are don't care when during SPI mode.

Figure 47. Performance Enhance Mode Reset for Fast Read Quad I/O (SPI Mode)

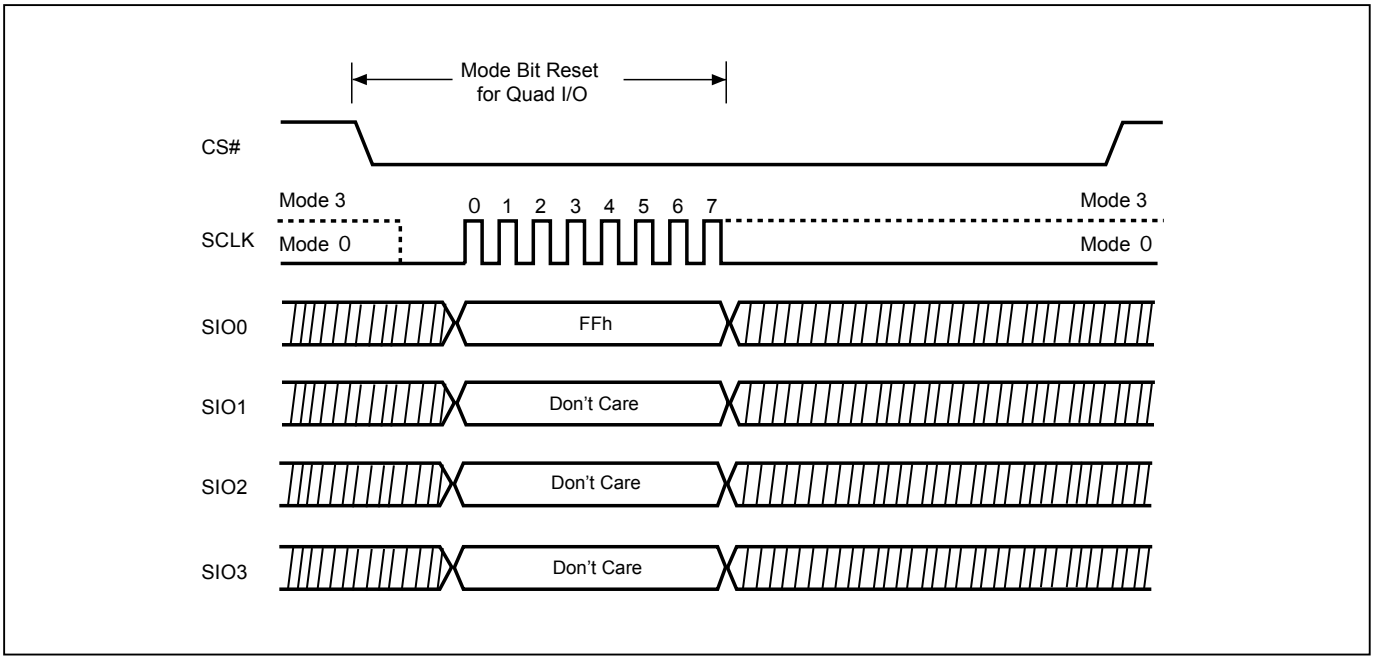

Figure 48. Performance Enhance Mode Reset for Fast Read Quad I/O (QPI Mode)

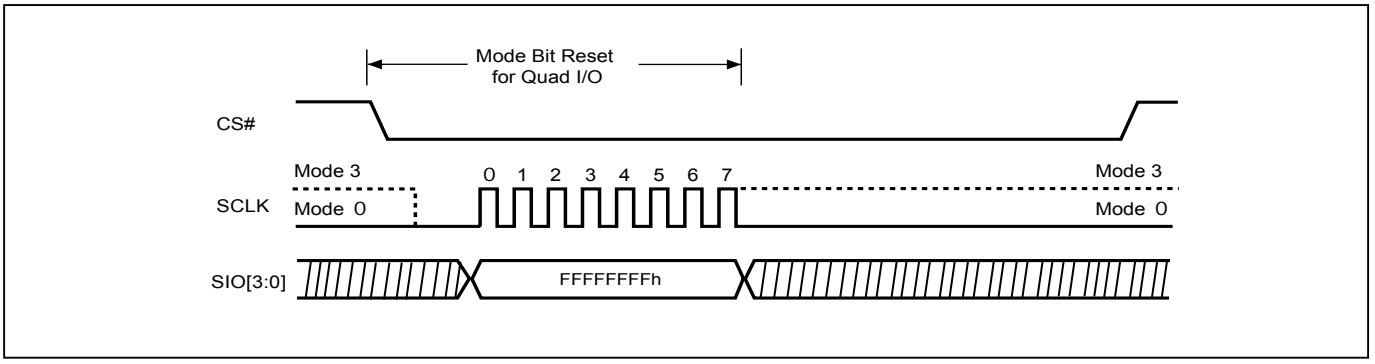

Figure 49. Performance Enhance Mode Reset for Fast Read Quad I/O using 4Byte Address Sequence (SPI Mode)

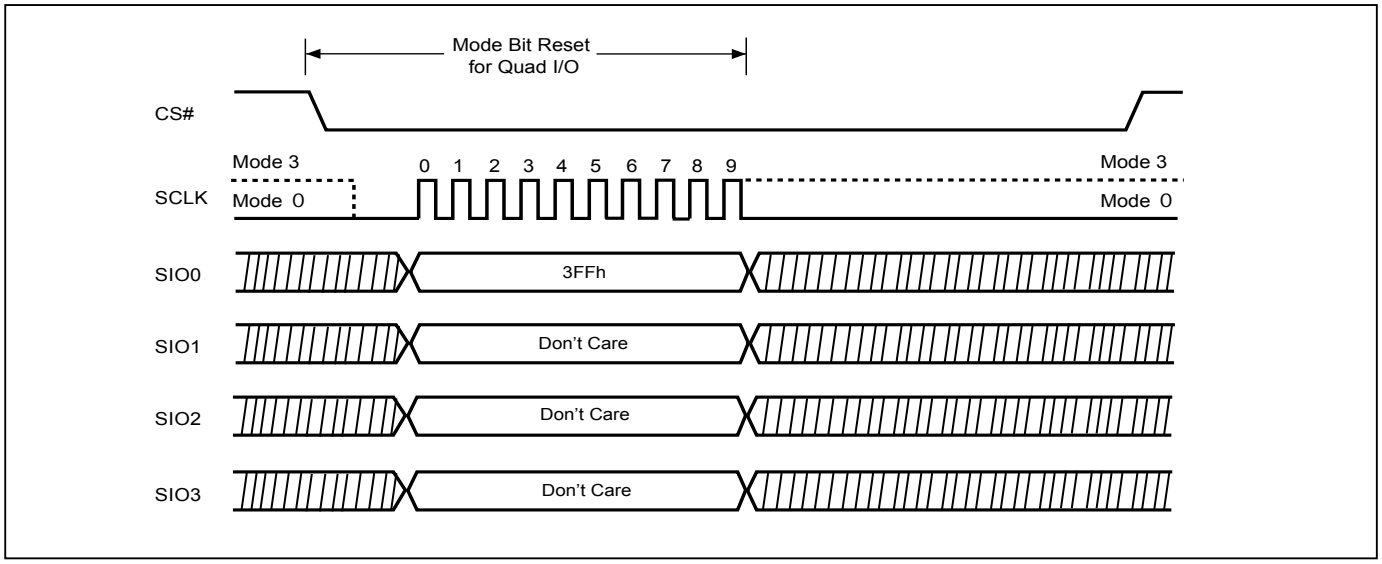

Figure 50. Performance Enhance Mode Reset for Fast Read Quad I/O using 4Byte Address Sequence (QPI Mode)

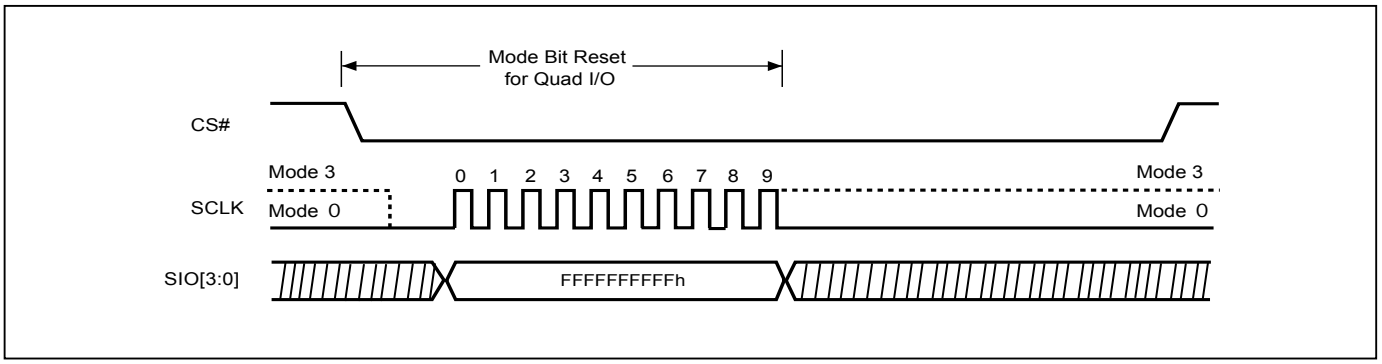

9-23. Sector Erase (SE)

The Sector Erase (SE) instruction is for erasing the data of the chosen sector to be "1". The instruction is used for any 4K-byte sector. A Write Enable (WREN) instruction must execute to set the Write Enable Latch (WEL) bit before sending the Sector Erase (SE). Any address of the sector (see *"Table 4. Memory Organization"*) is a valid address for Sector Erase (SE) instruction. The CS# must go high exactly at the byte boundary (the least significant bit of the address byte been latched-in); otherwise, the instruction will be rejected and not executed.

The default read mode is 3-byte address, to access higher address (4-byte address) which requires to enter the 4-byte address read mode or to define EAR bit. Address bits [Am-A12] (Am is the most significant address) select the sector address.

To enter the 4-byte address mode, please refer to *"9-10. Enter 4-byte mode (EN4B)"* section.

The sequence of issuing SE instruction is: CS# goes low→ sending SE instruction code→ 3-byte or 4-byte address on SI→ CS# goes high.

Both SPI (8 clocks) and QPI (2 clocks) command cycle can accept by this instruction. The SIO[3:1] are don't care when during SPI mode.

The self-timed Sector Erase Cycle time (tSE) is initiated as soon as Chip Select (CS#) goes high. The Write in Progress (WIP) bit still can be checked while the Sector Erase cycle is in progress. The WIP sets 1 during the tSE timing, and clears when Sector Erase Cycle is completed, and the Write Enable Latch (WEL) bit is cleared. If the Block is protected by BP bits (WPSEL=0; Block Protect Mode) or SPB (WPSEL=1; Individual Sector Protect Mode), the Sector Erase (SE) instruction will not be executed on the block.

Figure 51. Sector Erase (SE) Sequence (SPI Mode)

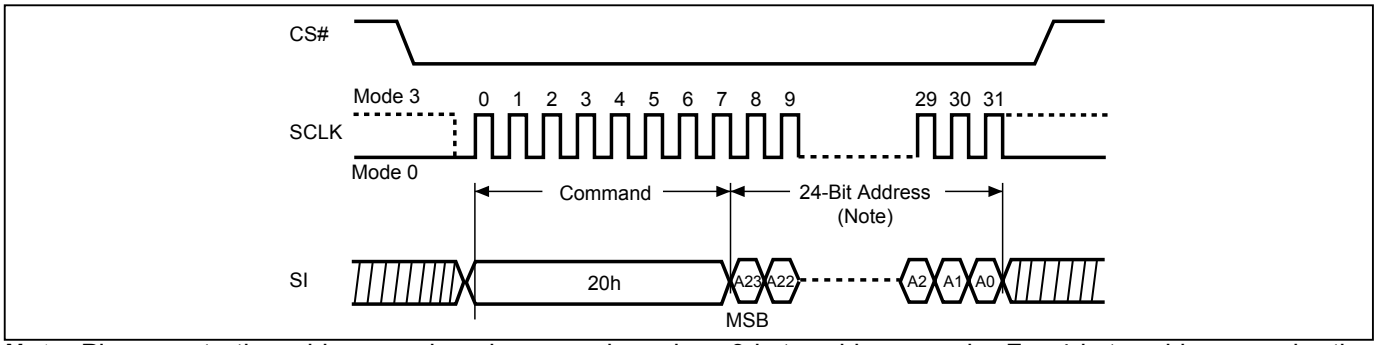

Note: Please note the address cycles above are based on 3-byte address mode. For 4-byte address mode, the address cycles will be increased.

Figure 52. Sector Erase (SE) Sequence (QPI Mode)

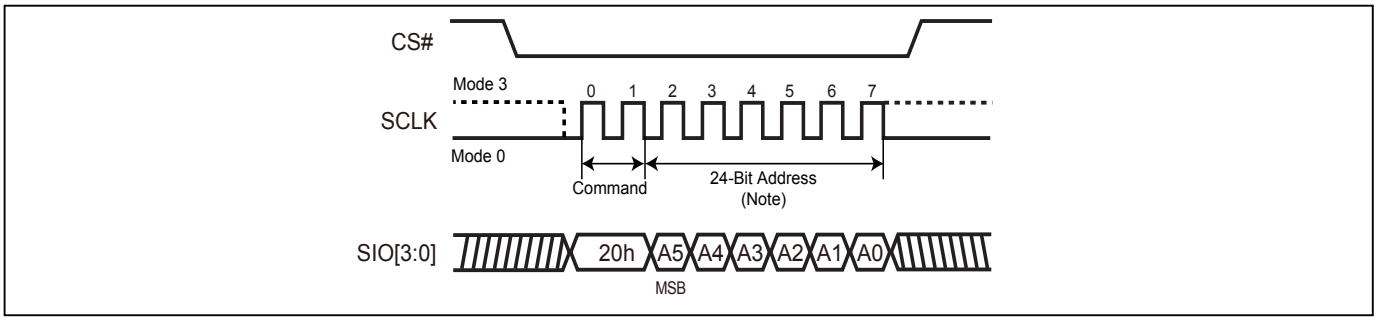

Note: Please note the address cycles above are based on 3-byte address mode. For 4-byte address mode, the address cycles will be increased.

9-24. Block Erase (BE32K)

The Block Erase (BE32K) instruction is for erasing the data of the chosen block to be "1". The instruction is used for 32K-byte block erase operation. A Write Enable (WREN) instruction be executed to set the Write Enable Latch (WEL) bit before sending the Block Erase (BE32K). Any address of the block (see *"Table 4. Memory Organization"*) is a valid address for Block Erase (BE32K) instruction. The CS# must go high exactly at the byte boundary (the least significant bit of address byte been latched-in); otherwise, the instruction will be rejected and not executed.

Address bits [Am-A15] (Am is the most significant address) select the 32KB block address. The default read mode is 3-byte address, to access higher address (4-byte address) which requires to enter the 4-byte address read mode or to define EAR bit. To enter the 4-byte address mode, please refer to the enter 4-byte mode (EN4B) Mode section.

The sequence of issuing BE32K instruction is: CS# goes low→ sending BE32K instruction code→ 3-byte or 4-byte address on SI→CS# goes high.

Both SPI (8 clocks) and QPI (2 clocks) command cycle can accept by this instruction. The SIO[3:1] are don't care when during SPI mode.

The self-timed Block Erase Cycle time (tBE32K) is initiated as soon as Chip Select (CS#) goes high. The Write in Progress (WIP) bit still can be checked while during the Block Erase cycle is in progress. The WIP sets during the tBE32K timing, and clears when Block Erase Cycle is completed, and the Write Enable Latch (WEL) bit is cleared. If the Block is protected by BP bits (WPSEL=0; Block Protect Mode) or SPB (WPSEL=1; Individual Sector Protect Mode), the Block Erase (BE32K) instruction will not be executed on the block.

Figure 53. Block Erase 32KB (BE32K) Sequence (SPI Mode)

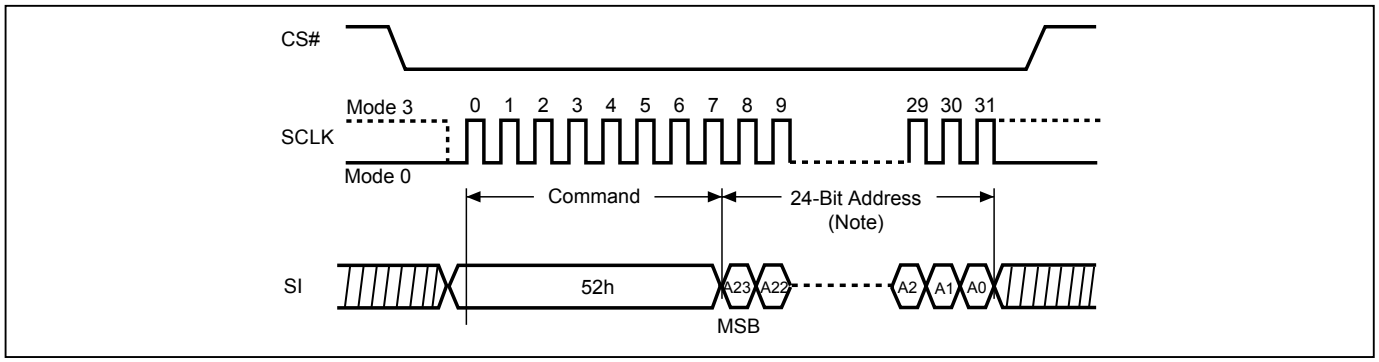

Note: Please note the address cycles above are based on 3-byte address mode. For 4-byte address mode, the address cycles will be increased.

Figure 54. Block Erase 32KB (BE32K) Sequence (QPI Mode)

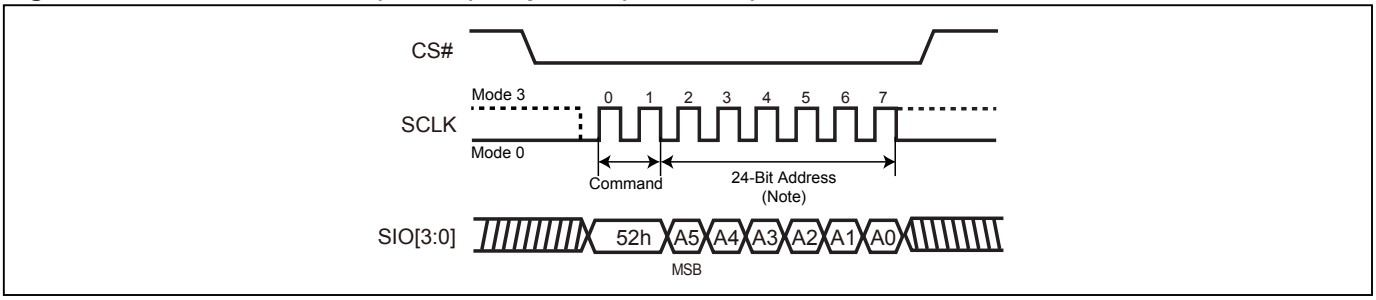

Note: Please note the address cycles above are based on 3-byte address mode. For 4-byte address mode, the address cycles will be increased.

9-25. Block Erase (BE)

The Block Erase (BE) instruction is for erasing the data of the chosen block to be "1". The instruction is used for 64K-byte block erase operation. A Write Enable (WREN) instruction must be executed to set the Write Enable Latch (WEL) bit before sending the Block Erase (BE). Any address of the block (Please refer to *"Table 4. Memory Organization"*) is a valid address for Block Erase (BE) instruction. The CS# must go high exactly at the byte boundary (the least significant bit of address byte been latched-in); otherwise, the instruction will be rejected and not executed.

The default read mode is 3-byte address, to access higher address (4-byte address) which requires to enter the 4-byte address read mode or to define EAR bit. To enter the 4-byte address mode, please refer to the *"9-10. Enter 4-byte mode (EN4B)"* Mode section.

The sequence of issuing BE instruction is: CS# goes low→ sending BE instruction code→ 3-byte or 4-byte address on SI→ CS# goes high.

Both SPI (8 clocks) and QPI (2 clocks) command cycle can accept by this instruction. The SIO[3:1] are don't care when during SPI mode.

The self-timed Block Erase Cycle time (tBE) is initiated as soon as Chip Select (CS#) goes high. The Write in Progress (WIP) bit still can be checked while the Block Erase cycle is in progress. The WIP sets during the tBE timing, and clears when Block Erase Cycle is completed, and the Write Enable Latch (WEL) bit is reset. If the Block is protected by BP bits (WPSEL=0; Block Protect Mode) or SPB (WPSEL=1; Individual Sector Protect Mode), the Block Erase (BE) instruction will not be executed on the block.

Figure 55. Block Erase (BE) Sequence (SPI Mode)

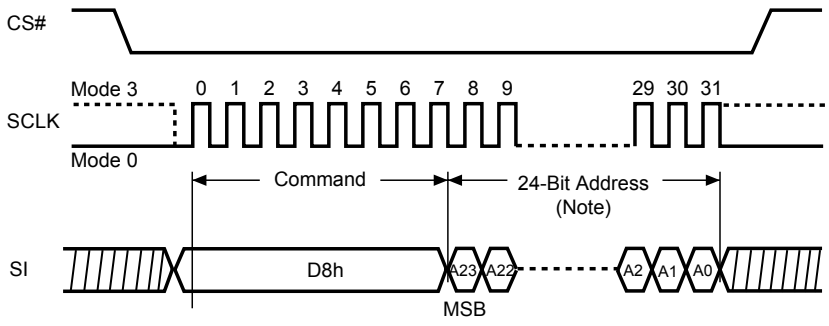

Note: Please note the address cycles above are based on 3-byte address mode. For 4-byte address mode, the address cycles will be increased.

Figure 56. Block Erase (BE) Sequence (QPI Mode)

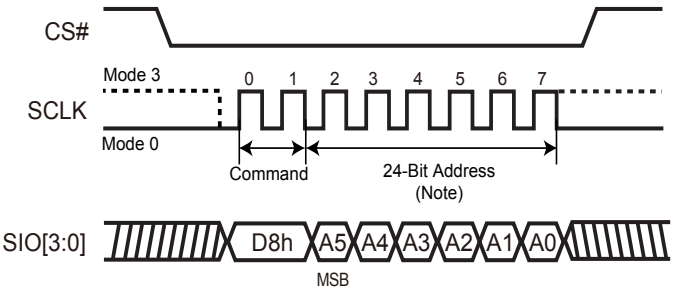

Note: Please note the address cycles above are based on 3-byte address mode. For 4-byte address mode, the address cycles will be increased.

9-26. Chip Erase (CE)

The Chip Erase (CE) instruction is for erasing the data of the whole chip to be "1". A Write Enable (WREN) instruction must be executed to set the Write Enable Latch (WEL) bit before sending the Chip Erase (CE). The CS# must go high exactly at the byte boundary, otherwise the instruction will be rejected and not executed.

The sequence of issuing CE instruction is: CS# goes low→sending CE instruction code→CS# goes high.

Both SPI (8 clocks) and QPI (2 clocks) command cycle can accept by this instruction. The SIO[3:1] are don't care when during SPI mode.

The self-timed Chip Erase Cycle time (tCE) is initiated as soon as Chip Select (CS#) goes high. The Write in Progress (WIP) bit still can be checked while the Chip Erase cycle is in progress. The WIP sets during the tCE timing, and clears when Chip Erase Cycle is completed, and the Write Enable Latch (WEL) bit is cleared.

When the chip is under "Block protect (BP) Mode" (WPSEL=0). The Chip Erase (CE) instruction will not be executed, if one (or more) sector is protected by BP3-BP0 bits. It will be only executed when BP3-BP0 all set to "0".

When the chip is under "Advances Sector Protect Mode" (WPSEL=1). The Chip Erase (CE) instruction will be executed on unprotected block. The protected Block will be skipped. If one (or more) 4K byte sector was protected in top or bottom 64K byte block, the protected block will also skip the chip erase command.

Figure 57. Chip Erase (CE) Sequence (SPI Mode)

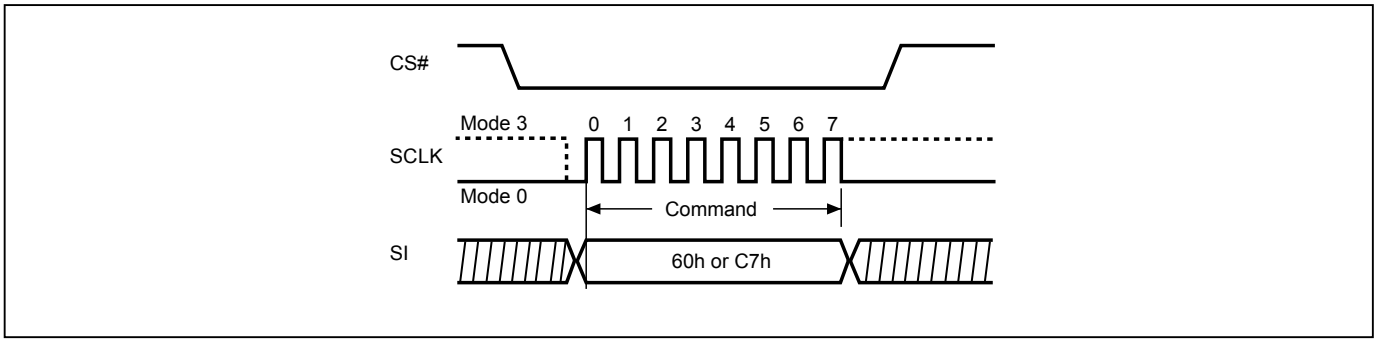

Figure 58. Chip Erase (CE) Sequence (QPI Mode)

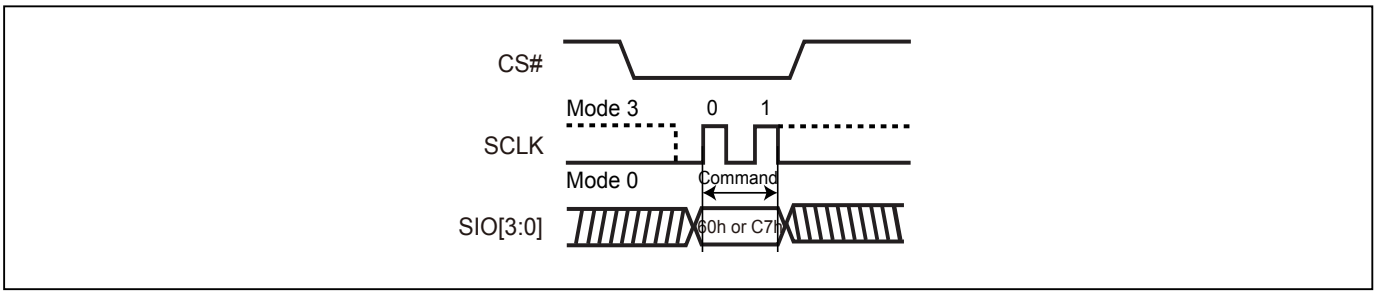

9-27. Page Program (PP)

The Page Program (PP) instruction is for programming the memory to be "0". A Write Enable (WREN) instruction must be executed to set the Write Enable Latch (WEL) bit before sending the Page Program (PP). The device programs only the last 256 data bytes sent to the device. If the entire 256 data bytes are going to be programmed, A7-A0 (The eight least significant address bits) should be set to 0. The last address byte (the 8 least significant address bits, A7-A0) should be set to 0 for 256 bytes page program. If A7-A0 are not all zero, transmitted data that exceed page length are programmed from the starting address (24-bit address that last 8 bit are all 0) of currently selected page. If the data bytes sent to the device exceeds 256, the last 256 data byte is programmed at the request page and previous data will be disregarded. If the data bytes sent to the device has not exceeded 256, the data will be programmed at the request address of the page. There will be no effort on the other data bytes of the same page.

The default read mode is 3-byte address, to access higher address (4-byte address) which requires to enter the 4-byte address read mode or to define EAR bit. To enter the 4-byte address mode, please refer to the enter 4-byte mode (EN4B) Mode section.

The sequence of issuing PP instruction is: CS# goes low→ sending PP instruction code→ 3-byte or 4-byte address on SI→ at least 1-byte on data on SI→ CS# goes high.

The CS# must be kept to low during the whole Page Program cycle; The CS# must go high exactly at the byte boundary(the latest eighth bit of data being latched in), otherwise the instruction will be rejected and will not be executed.

The self-timed Page Program Cycle time (tPP) is initiated as soon as Chip Select (CS#) goes high. The Write in Progress (WIP) bit still can be checked while the Page Program cycle is in progress. The WIP sets during the tPP timing, and clears when Page Program Cycle is completed, and the Write Enable Latch (WEL) bit is cleared. If the page is protected by BP bits (WPSEL=0; Block Protect Mode) or SPB (WPSEL=1; Individual Sector Protect Mode), the Page Program (PP) instruction will not be executed.

Both SPI (8 clocks) and QPI (2 clocks) command cycle can accept by this instruction. The SIO[3:1] are don't care when during SPI mode.

Figure 59. Page Program (PP) Sequence (SPI Mode)

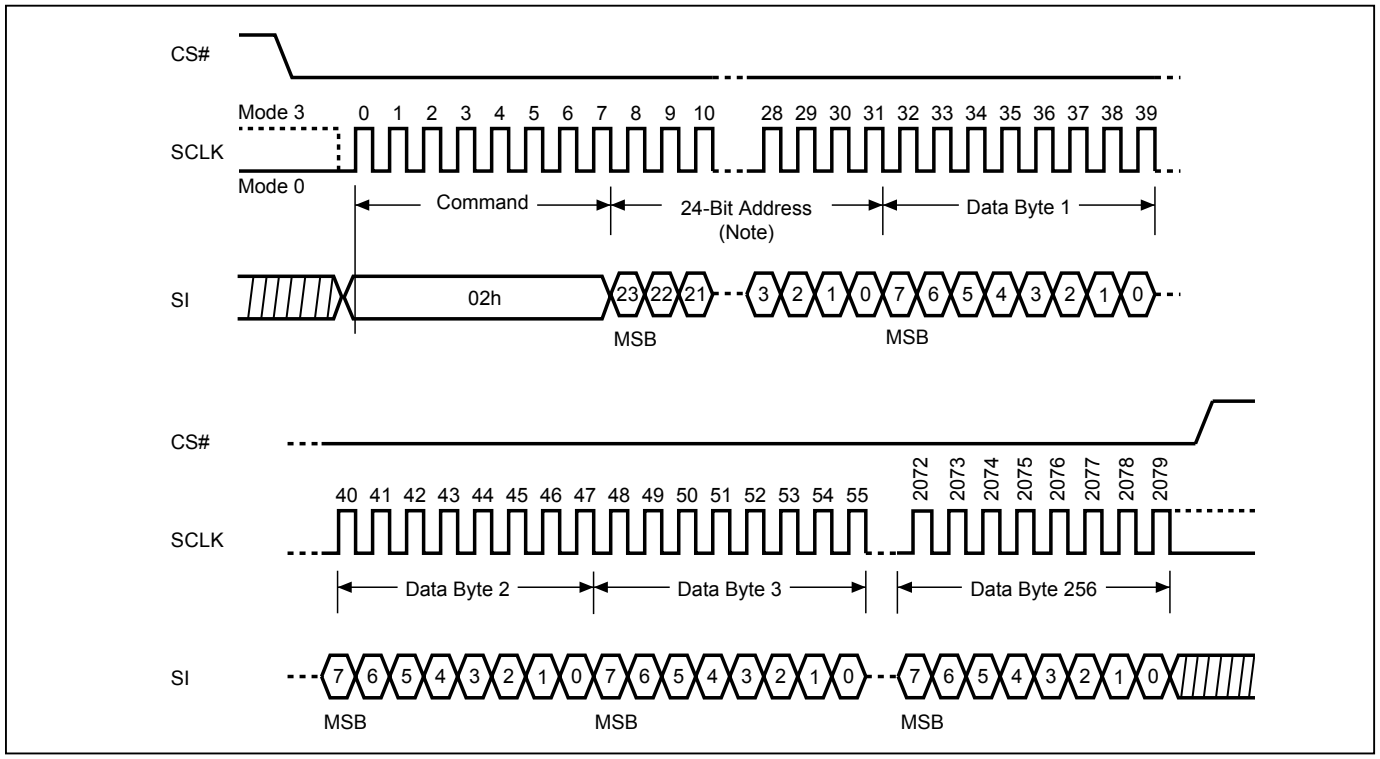

Note: Please note the address cycles above are based on 3-byte address mode. For 4-byte address mode, the address cycles will be increased.

Figure 60. Page Program (PP) Sequence (QPI Mode)

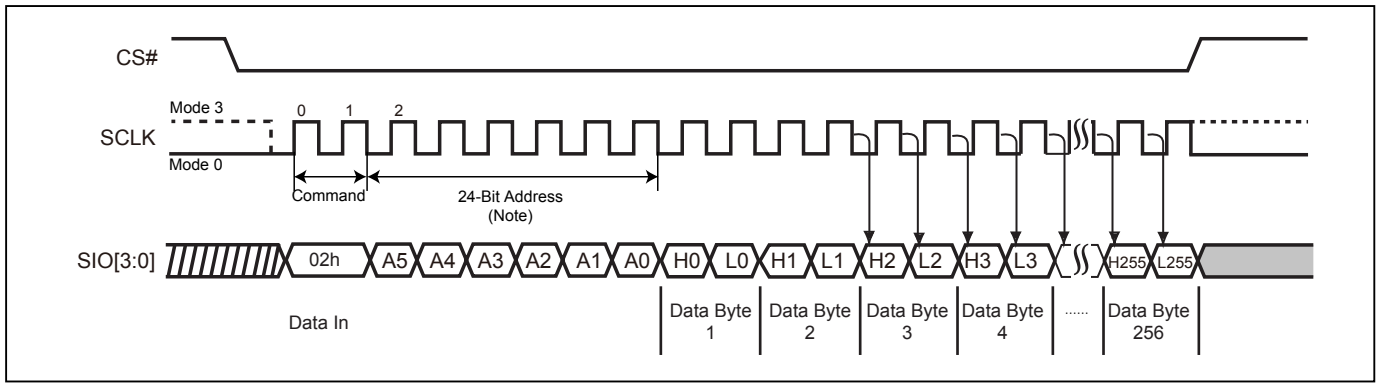

Note: Please note the address cycles above are based on 3-byte address mode. For 4-byte address mode, the address cycles will be increased.

9-28. 4 x I/O Page Program (4PP)

The Quad Page Program (4PP) instruction is for programming the memory to be "0". A Write Enable (WREN) instruction must be executed to set the Write Enable Latch (WEL) bit and Quad Enable (QE) bit must be set to "1" before sending the Quad Page Program (4PP). The Quad Page Programming takes four pins: SIO0, SIO1, SIO2, and SIO3 as address and data input, which can improve programmer performance and the effectiveness of application. The other function descriptions are as same as standard page program.

The default read mode is 3-byte address, to access higher address (4-byte address) which requires to enter the 4-byte address read mode or to define EAR bit. To enter the 4-byte address mode, please refer to the *"9-10. Enter 4-byte mode (EN4B)"* section.

The sequence of issuing 4PP instruction is: CS# goes low→ sending 4PP instruction code→ 3-byte or 4-byte address on SIO[3:0]→ at least 1-byte on data on SIO[3:0]→CS# goes high.

If the page is protected by BP bits (WPSEL=0; Block Protect Mode) or SPB (WPSEL=1; Individual Sector Protect Mode), the Quad Page Program (4PP) instruction will not be executed.

Figure 61. 4 x I/O Page Program (4PP) Sequence (SPI Mode only)

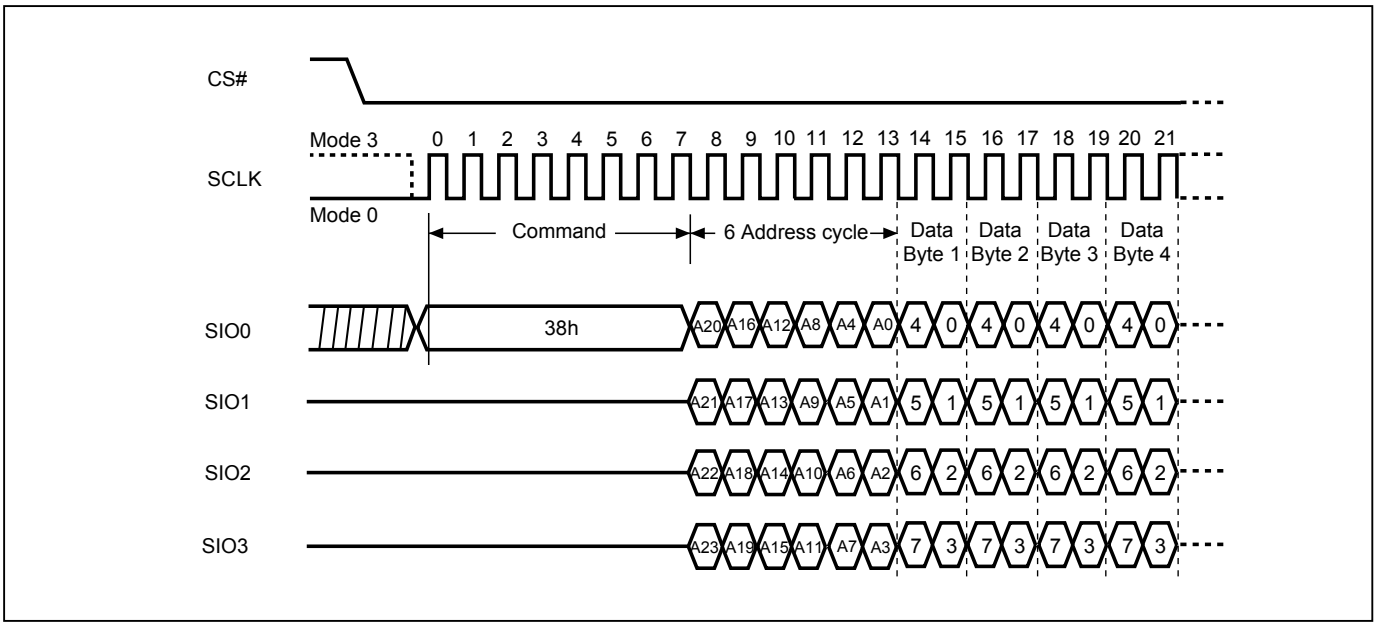

Note: Please note the address cycles above are based on 3-byte address mode. For 4-byte address mode, the address cycles will be increased.

9-29. Deep Power-down (DP)

The Deep Power-down (DP) instruction is for setting the device to minimum power consumption (the standby current is reduced from ISB1 to ISB2). The Deep Power-down mode requires the Deep Power-down (DP) instruction to enter, during the Deep Power-down mode, the device is not active and all Write/Program/Erase instruction are ignored. When CS# goes high, it's only in deep power-down mode, not standby mode.

The sequence of issuing DP instruction is: CS# goes low→sending DP instruction code→CS# goes high.

Both SPI (8 clocks) and QPI (2 clocks) command cycle can accept by this instruction. The SIO[3:1] are don't care when during SPI mode.

Once the DP instruction is set, all instruction will be ignored except the Release from Deep Power-down mode (RDP) and Read Electronic Signature (RES) instruction and softreset command. (those instructions allow the ID being reading out). When Power-down, or software reset command the deep power-down mode automatically stops, and when power-up, the device automatically is in standby mode. For DP instruction the CS# must go high exactly at the byte boundary (the latest eighth bit of instruction code been latched-in); otherwise, the instruction will not executed. As soon as Chip Select (CS#) goes high, a delay of tDP is required before entering the Deep Power-down mode.

Figure 62. Deep Power-down (DP) Sequence (SPI Mode)

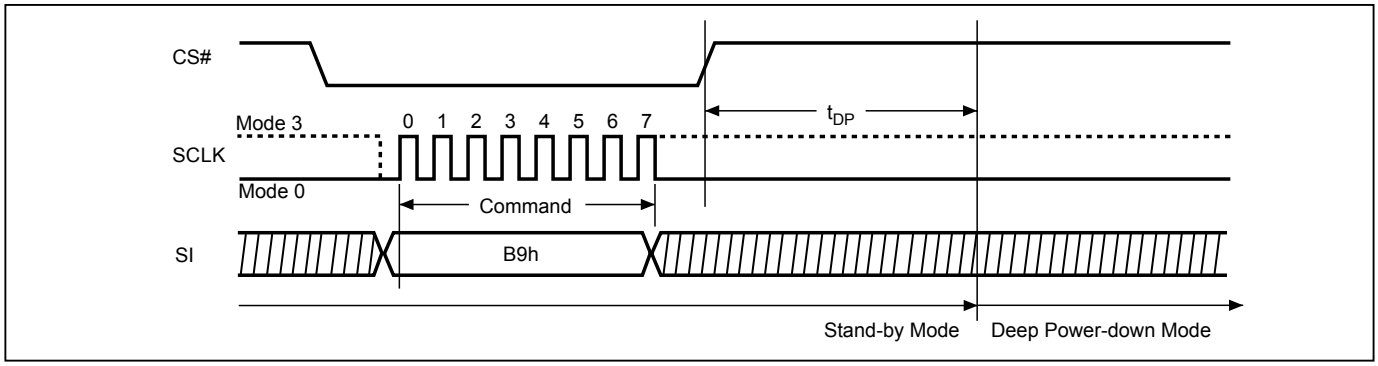

Figure 63. Deep Power-down (DP) Sequence (QPI Mode)

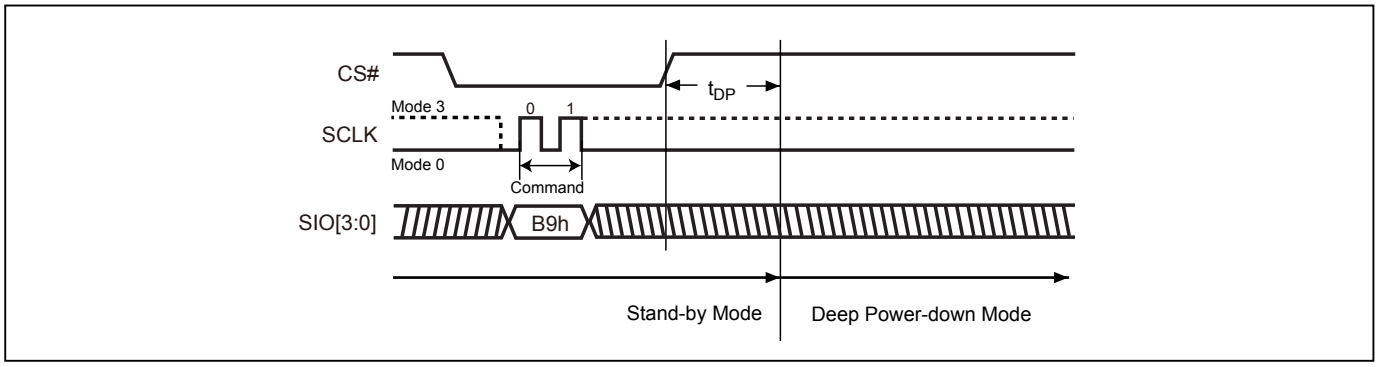

9-30. Enter Secured OTP (ENSO)

The ENSO instruction is for entering the additional 4K-bit secured OTP mode. While device is in 4K-bit secured OTPmode, main array access is not available. The additional 4K-bit secured OTP is independent from main array and may be used to store unique serial number for system identifier. After entering the Secured OTP mode, follow standard read or program procedure to read out the data or update data. The Secured OTP data cannot be updated again once it is lock-down.

The sequence of issuing ENSO instruction is: CS# goes low→ sending ENSO instruction to enter Secured OTP mode→ CS# goes high.

Both SPI (8 clocks) and QPI (2 clocks) command cycle can accept by this instruction. The SIO[3:1] are don't care when during SPI mode.

Please note that after issuing ENSO command user can only access secure OTP region with standard read or program procedure. Furthermore, once security OTP is lock down, only read related commands are valid.

9-31. Exit Secured OTP (EXSO)

The EXSO instruction is for exiting the additional 4K-bit secured OTP mode.

The sequence of issuing EXSO instruction is: CS# goes low→ sending EXSO instruction to exit Secured OTP mode→ CS# goes high.

Both SPI (8 clocks) and QPI (2 clocks) command cycle can accept by this instruction. The SIO[3:1] are don't care when during SPI mode.

9-32. Read Security Register (RDSCUR)

The RDSCUR instruction is for reading the value of Security Register bits. The Read Security Register can be read at any time (even in program/erase/write status register/write security register condition) and continuously.

The sequence of issuing RDSCUR instruction is : CS# goes low→sending RDSCUR instruction→Security Register data out on SO→ CS# goes high.

Both SPI (8 clocks) and QPI (2 clocks) command cycle can accept by this instruction. The SIO[3:1] are don't care when during SPI mode.

9-33. Write Security Register (WRSCUR)

The WRSCUR instruction is for changing the values of Security Register Bits. The WREN (Write Enable) instruction is required before issuing WRSCUR instruction. The WRSCUR instruction may change the values of bit1 (LDSO bit) for customer to lock-down the 4K-bit Secured OTP area. Once the LDSO bit is set to "1", the Secured OTP area cannot be updated any more.

The sequence of issuing WRSCUR instruction is :CS# goes low→ sending WRSCUR instruction → CS# goes high.

Both SPI (8 clocks) and QPI (2 clocks) command cycle can accept by this instruction. The SIO[3:1] are don't care when during SPI mode.

The CS# must go high exactly at the boundary; otherwise, the instruction will be rejected and not executed.

Security Register

The definition of the Security Register bits is as below:

Write Protection Selection bit. Please reference to "*Write Protection Selection bit*"

Erase Fail bit. The Erase Fail bit is a status flag, which shows the status of last Erase operation. It will be set to "1", if the erase operation fails. It will be set to "0", if the last operation is success. Please note that it will not interrupt or stop any operation in the flash memory.

Program Fail bit. The Program Fail bit is a status flag, which shows the status of last Program operation. It will be set to "1", if the program operation fails or the program region is protected. It will be set to "0", if the last operation is success. Please note that it will not interrupt or stop any operation in the flash memory.

Erase Suspend bit. Erase Suspend Bit (ESB) indicates the status of Erase Suspend operation. Users may use ESB to identify the state of flash memory. After the flash memory is suspended by Erase Suspend command, ESB is set to "1". ESB is cleared to "0" after erase operation resumes.

Program Suspend bit. Program Suspend Bit (PSB) indicates the status of Program Suspend operation. Users may use PSB to identify the state of flash memory. After the flash memory is suspended by Program Suspend command, PSB is set to "1". PSB is cleared to "0" after program operation resumes.

Secured OTP Indicator bit. The Secured OTP indicator bit shows the chip is locked by factory or not. When it is "0", it indicates non-factory lock; "1" indicates factory-lock.

Lock-down Secured OTP (LDSO) bit. By writing WRSCUR instruction, the LDSO bit may be set to "1" for customer lock-down purpose. However, once the bit is set to "1" (lock-down), the LDSO bit and the 4K-bit Secured OTP area cannot be updated any more. While it is in 4K-bit secured OTP mode, main array access is not allowed.

Table 9. Security Register Definition

bit7	bit6	bit5	bit4	bit3	bit2	bit1	bit0
WPSEL	E_FAIL	P_FAIL	Reserved	ESB (Erase Suspend bit)	PSB (Program Suspend bit)	LDSO (indicate if lock-down)	Secured OTP indicator bit
0=normal WP mode 1=individual mode (default=0)	0=normal Erase succeed 1=indicate Erase failed (default=0)	0=normal Program succeed 1=indicate Program failed (default=0)	-	0=Erase is not suspended 1= Erase suspended (default=0)	0=Program is not suspended 1= Program suspended (default=0)	0 = not lock-down 1 = lock-down (cannot program/ erase OTP)	0 = non-factory lock 1 = factory lock
Non-volatile bit (OTP)	Volatile bit	Volatile bit	Volatile bit	Volatile bit	Volatile bit	Non-volatile bit (OTP)	Non-volatile bit (OTP)

9-34. Write Protection Selection (WPSEL)

There are two write protection methods provided on this device, (1) Block Lock (BP) protection mode (2) Advanced Sector protection mode. If WPSEL=0, flash is under BP protection mode. If WPSEL=1, flash is under Advanced Sector protection mode. The default value of WPSEL is "0". WPSEL command can be used to set WPSEL=1. **Please note that WPSEL is an OTP bit. Once WPSEL is set to 1, there is no chance to recovery WPSEL back to "0".** If the flash is put on BP mode, the Advanced Sector protection mode is disabled. Contrarily, if flash is on the Advanced Sector protection mode, the BP mode is disabled.

When WPSEL = 0: Block Lock (BP) protection mode,
Array is protected by BP3~BP0 and BP bits are protected by "SRWD=1 and WP#=0", where SRWD is bit 7 of status register that can be set by WRSR command.

When WPSEL =1: Advanced Sector protection mode,
Blocks are individually protected by their own SPB lock bits which are set to "1" after power up. When the system accepts and executes WPSEL instruction, the bit 7 in security register will be set. It will activate WRSPB, ESSPB, etc instructions to conduct block lock protection and replace the original Software Protect Mode (SPM) use (BP3~BP0) indicated block methods. Under the Advanced Sector protection mode (WPSEL=1), hardware protection is performed by driving WP#=0. Once WP#=0 all array blocks/sectors are protected regardless of the contents of SPB lock bits.

The sequence of issuing WPSEL instruction is: CS# goes low → sending WPSEL instruction to enter the individual block protect mode → CS# goes high.

Write Protection Selection

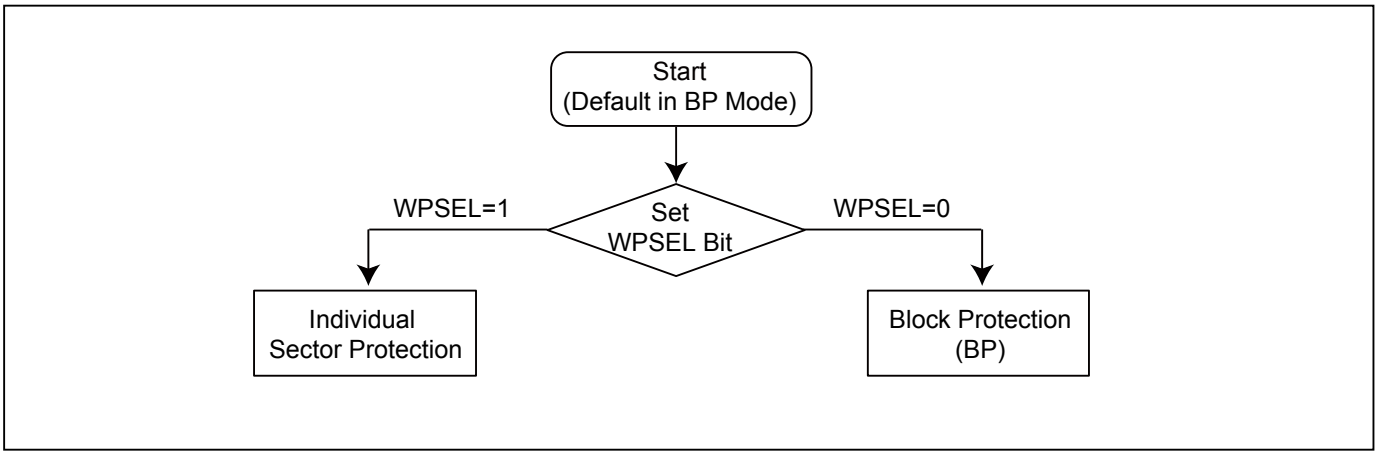

Figure 64. WPSEL Flow

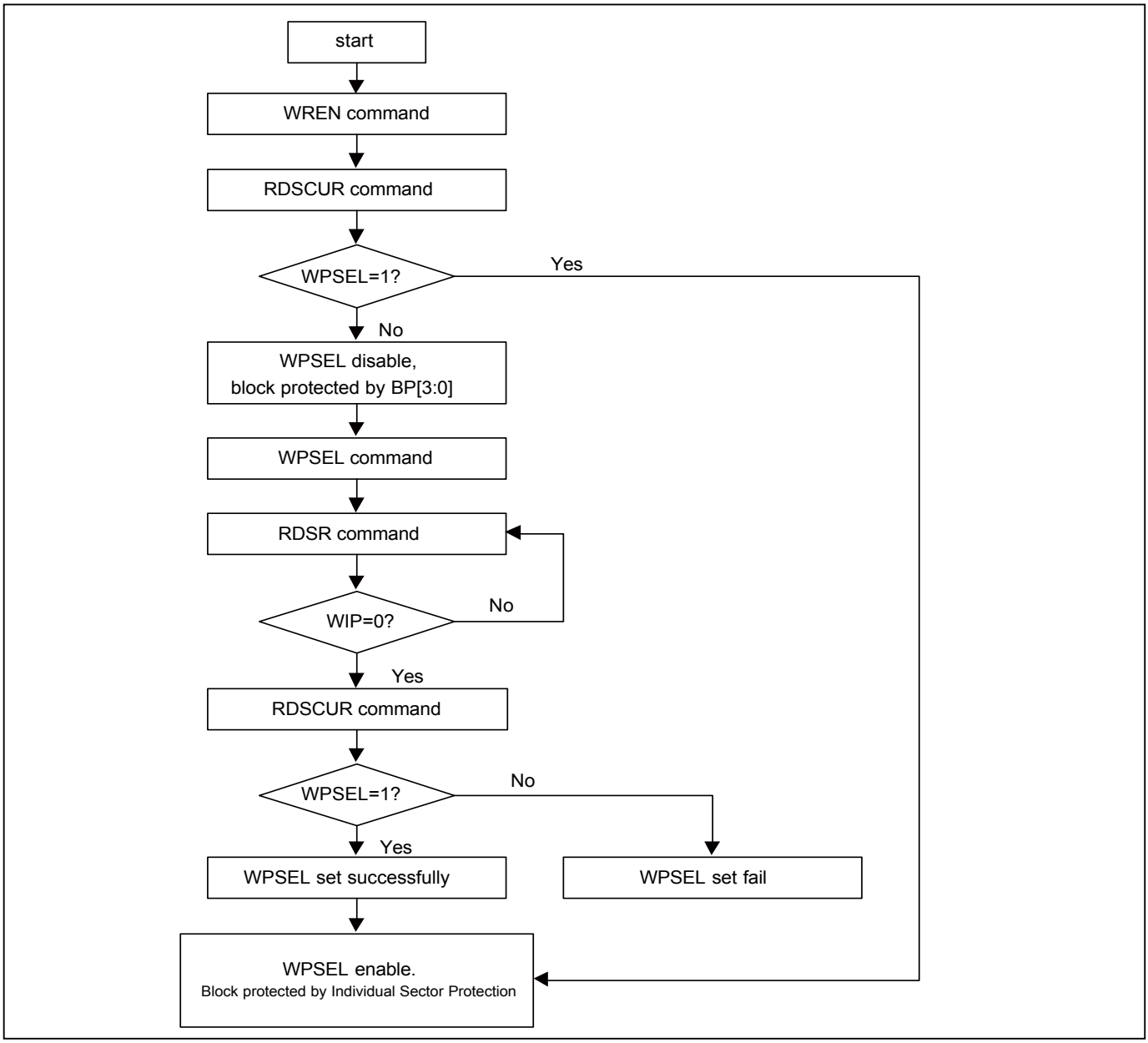

9-35. Individual Sector Protection

There is a non-volatile (SPB) protection bit related to the single sector in main flash array. Each of the sectors is protected from programming or erasing operation when the bit is set.

The figure below helps describing an overview of these methods. The device is default to the Solid mode when shipped from factory. The detail algorithm of advanced sector protection is shown as follows:

Figure 65. Individual Sector Protection Overview

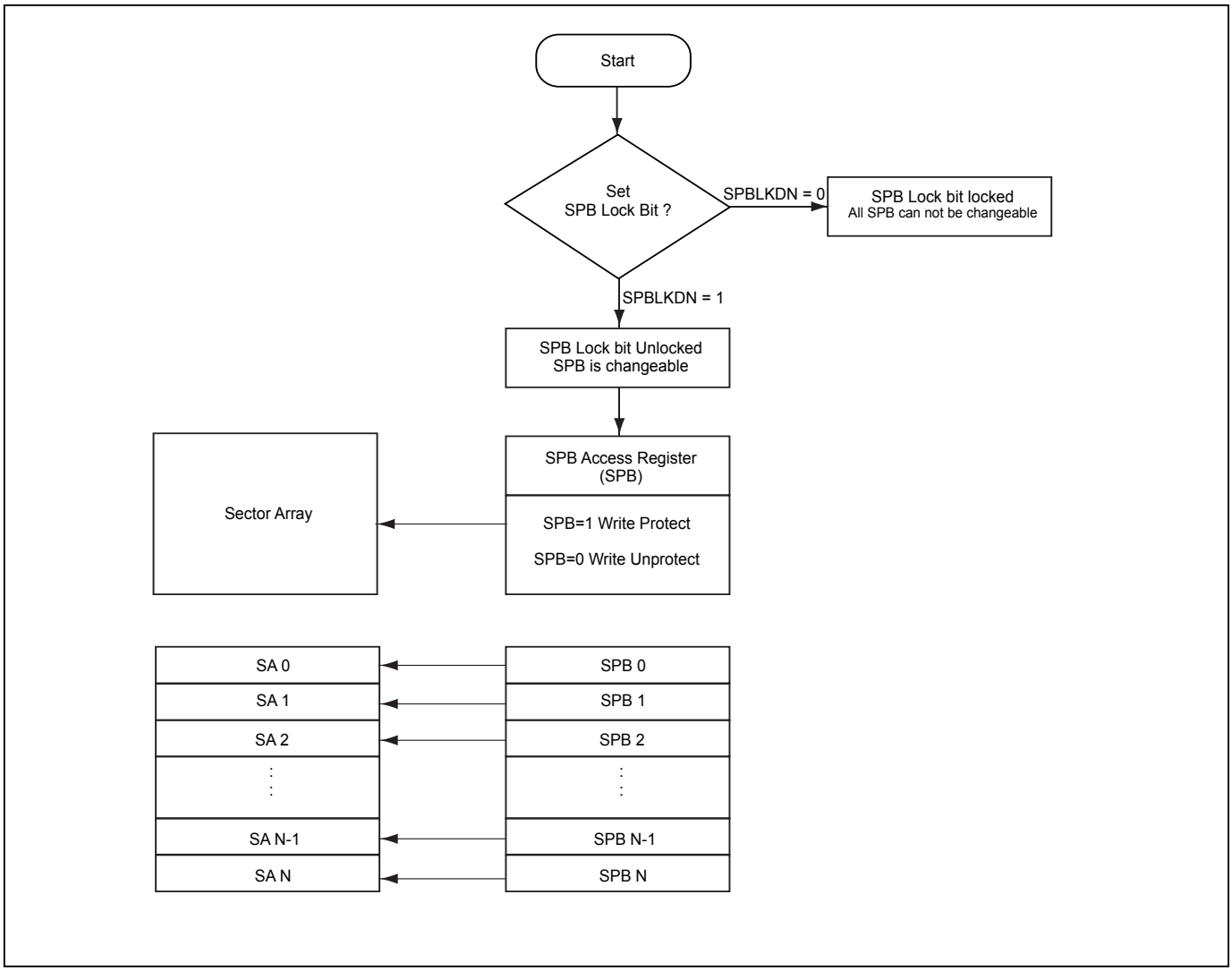

9-35-1. Lock Register

The Lock Register is a 16-bit one-time programmable register. Lock Register bit [6] is SPB Lock Down Bit (SPBLKDN) which is an unique bit assigned to control all SPB bit status.

When SPBLKDN is 1, SPB can be changed. When it is locked as 0, all SPB can not be changed anymore, and SPBLKDN bit itself can not be altered anymore, either.

The Lock Register is programmed using the WRLR (Write Lock Register) command. A WREN command must be executed to set the WEL bit before sending the WRLR command.

Lock Register

Bits	Field Name	Function	Type	Default State	Description
15 to 7	RFU	Reserved	OTP	1	Reserved for Future Use
6	SPBLKDN	SPB Lock Down	OTP	1	1 = SPB changeable 0 = freeze SPB
5 to 0	RFU	Reserved	OTP	1	Reserved for Future Use

Figure 66. Read Lock Register (RDLR) Sequence

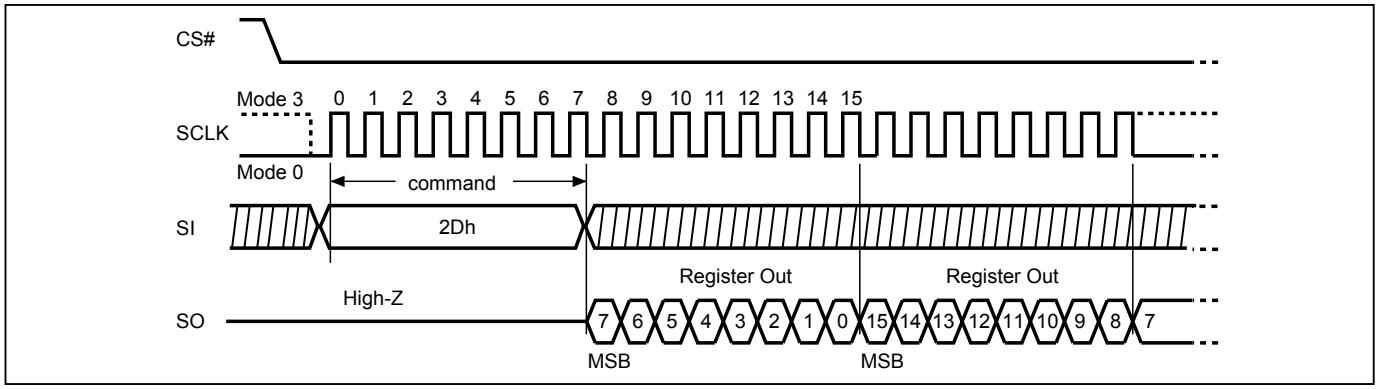

Figure 67. Write Lock Register (WRLR) Sequence

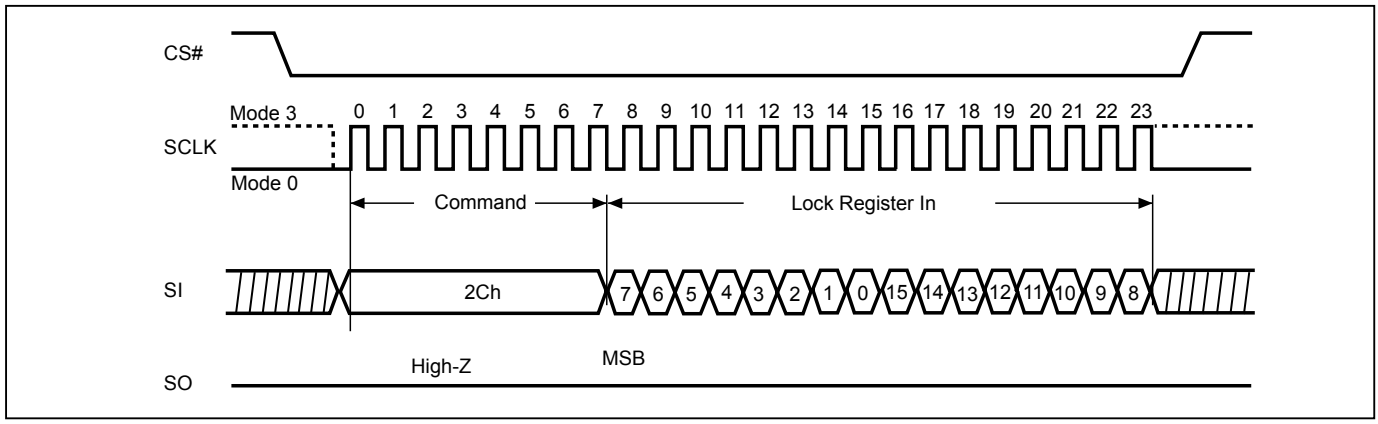

9-35-2. Solid Protection Bits

The Solid Protection Bits (SPBs) are nonvolatile bits for enabling or disabling write-protection to sectors and blocks. The SPB bits have the same endurance as the Flash memory. An SPB is assigned to each 4KB sector in the bottom and top 64KB of memory and to each 64KB block in the remaining memory. The factory default state of the SPB bits is “0”, which has the sector/block write-protection disabled.

When an SPB is set to “1”, the associated sector or block is write-protected. Program and erase operations on the sector or block will be inhibited. SPBs can be individually set to “1” by the WRSPB command. However, the SPBs cannot be individually cleared to “0”. Issuing the ESSPB command clears all SPBs to “0”. A WREN command must be executed to set the WEL bit before sending the WRSPB or ESSPB command.

The RDSPB command reads the status of the SPB of a sector or block. The RDSPB command returns 00h if the SPB is “0”, indicating write-protection is disabled. The RDSPB command returns FFh if the SPB is “1”, indicating write-protection is enabled.

Note: If SPBLKDN=0, commands to set or clear the SPB bits will be ignored.

SPB Register

Bit	Description	Bit Status	Default	Type
7 to 0	SPB (Solid Protection Bit)	00h = Unprotect Sector / Block FFh = Protect Sector / Block	00h	Non-volatile

Figure 68. Read SPB Status (RDSPB) Sequence

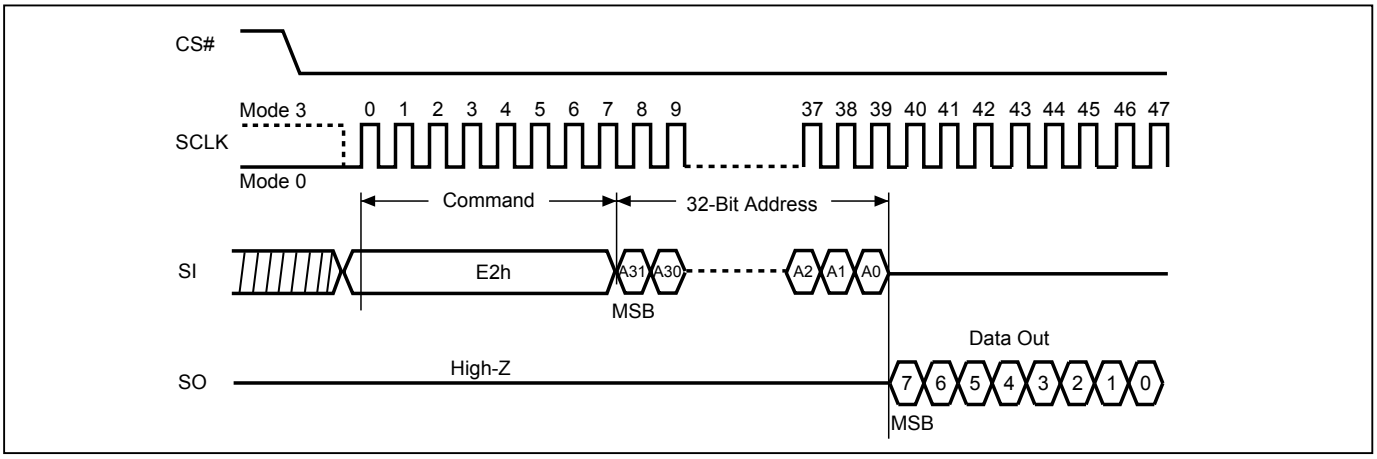

Figure 69. SPB Erase (ESSPB) Sequence

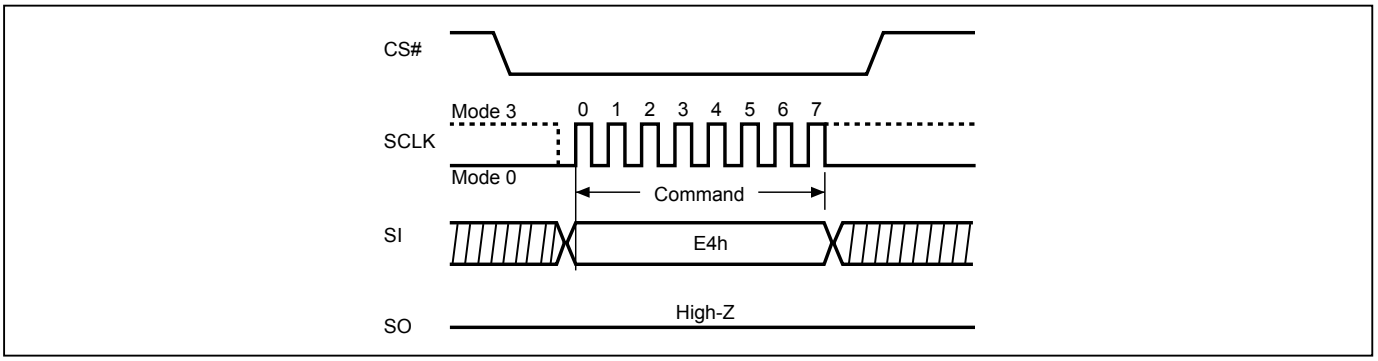

Figure 70. SPB Program (WRSPB) Sequence

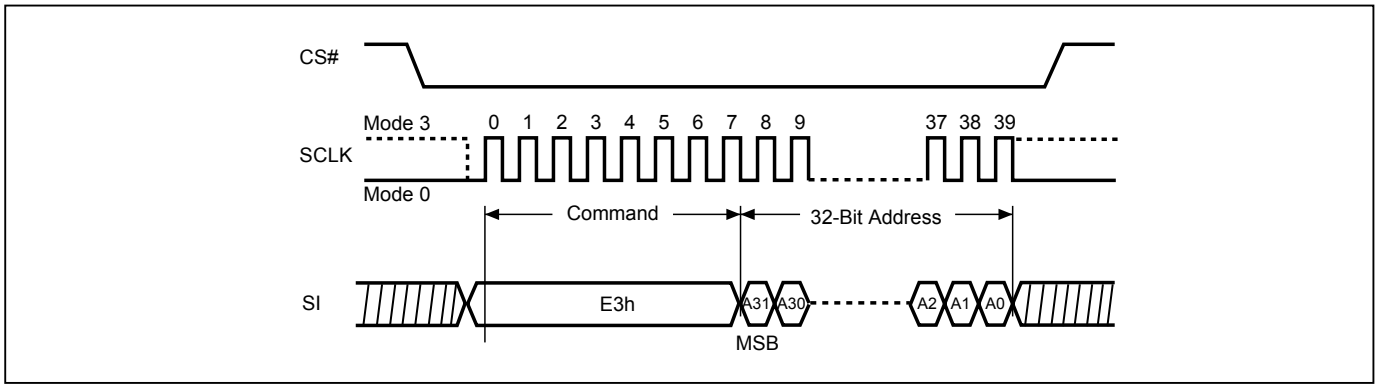

9-36. Program/Erase Suspend/Resume

The device allow the interruption of Sector-Erase, Block-Erase or Page-Program operations and conduct other operations.

After issue suspend command, the system can determine if the device has entered the Erase-Suspended mode through Bit2 (PSB) and Bit3 (ESB) of security register. (please refer to *"Table 9. Security Register Definition"*)

Both SPI (8 clocks) and QPI (2 clocks) command cycle can accept by this instruction. The SIO[3:1] are don't care when during SPI mode.

9-37. Erase Suspend

Erase suspend allow the interruption of all erase operations. After the device has entered Erase-Suspended mode, the system can read any sector(s) or Block(s) except those being erased by the suspended erase operation. Reading the sector or Block being erase suspended is invalid.

After erase suspend, WEL bit will be clear, only read related, resume and reset command can be accepted. (including: 03h, 0Bh, 3Bh, 6Bh, BBh, EBh, 5Ah, C0h, 06h, 04h, 2Bh, 9Fh, AFh, 05h, ABh, 90h, B1h, C1h, B0h, 30h, 66h, 99h, 00h, 35h, F5h, 15h, 2Dh, 27h, A7h, E2h, E0h, 16h)

If the system issues an Erase Suspend command after the sector erase operation has already begun, the device will not enter Erase-Suspended mode until 20us time has elapsed.

Erase Suspend Bit (ESB) indicates the status of Erase Suspend operation. Users may use ESB to identify the state of flash memory. After the flash memory is suspended by Erase Suspend command, ESB is set to "1". ESB is cleared to "0" after erase operation resumes.

9-38. Program Suspend

Program suspend allows the interruption of all program operations. After the device has entered Program-Suspended mode, the system can read any sector(s) or Block(s) except those being programmed by the suspended program operation. Reading the sector or Block being program suspended is invalid.

After program suspend, WEL bit will be cleared, only read related, resume and reset command can be accepted. (including: 03h, 0Bh, 3Bh, 6Bh, BBh, EBh, 5Ah, C0h, 06h, 04h, 2Bh, 9Fh, AFh, 05h, ABh, 90h, B1h, C1h, B0h, 30h, 66h, 99h, 00h, 35h, F5h, 15h, 2Dh, 27h, A7h, E2h, E0h, 16h)

Program Suspend Bit (PSB) indicates the status of Program Suspend operation. Users may use PSB to identify the state of flash memory. After the flash memory is suspended by Program Suspend command, PSB is set to "1". PSB is cleared to "0" after program operation resumes.

Figure 71. Suspend to Read Latency

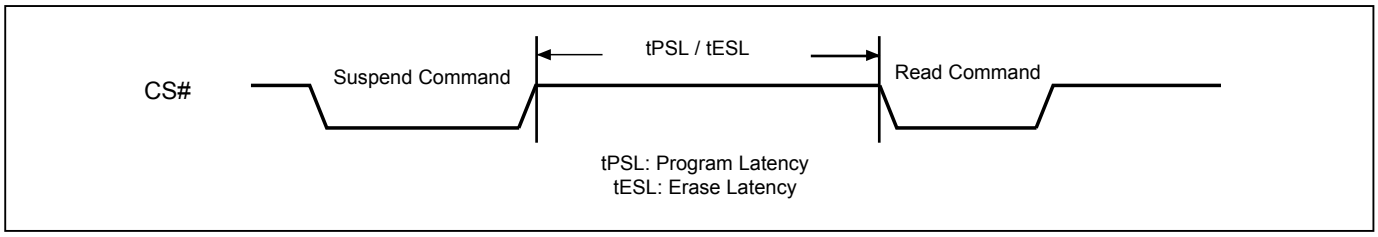

Figure 72. Resume to Read Latency

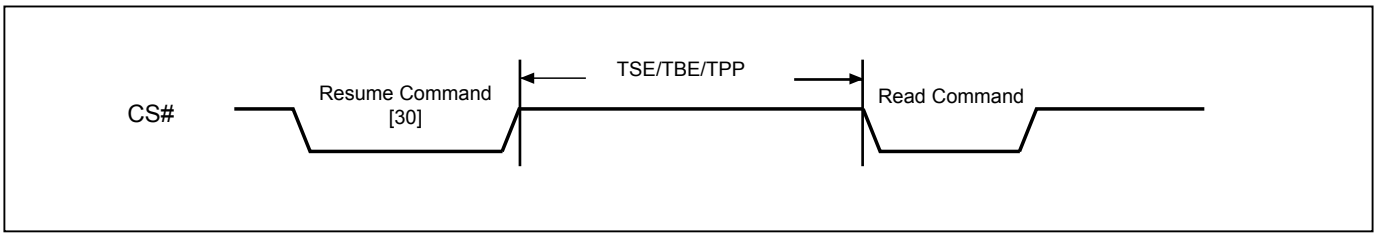

Figure 73. Resume to Suspend Latency

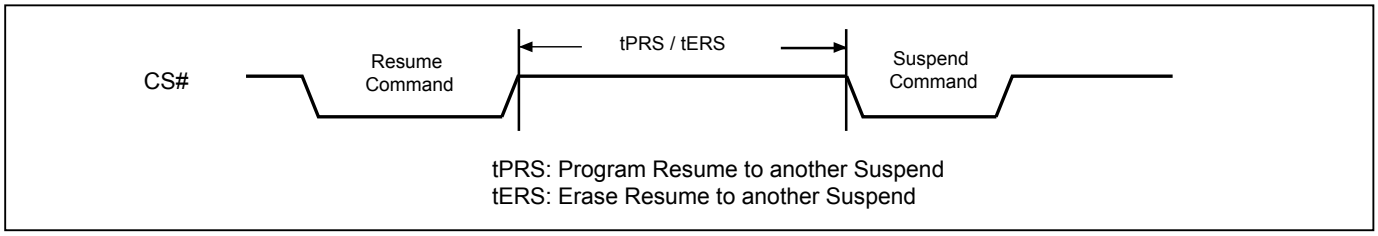

9-39. Write-Resume

The Write operation is being resumed when Write-Resume instruction issued. ESB or PSB (suspend status bit) in Status register will be changed back to “0”.

The operation of Write-Resume is as follows: CS# drives low → send write resume command cycle (30H) → drive CS# high. By polling Busy Bit in status register, the internal write operation status could be checked to be completed or not. The user may also wait the time lag of TSE, TBE, TPP for Sector-erase, Block-erase or Page-programming. WREN (command "06") is not required to issue before resume. Resume to another suspend operation requires latency time of 1ms.

Please note that, if "performance enhance mode" is executed during suspend operation, the device can not be resumed. To restart the write command, disable the "performance enhance mode" is required. After the "performance enhance mode" is disabled, the write-resume command is effective.

9-40. No Operation (NOP)

The “No Operation” command is only able to terminate the Reset Enable (RSTEN) command and will not affect any other command.

Both SPI (8 clocks) and QPI (2 clocks) command cycle can accept by this instruction. The SIO[3:1] are don't care during SPI mode.

9-41. Software Reset (Reset-Enable (RSTEN) and Reset (RST))

The Software Reset operation combines two instructions: Reset-Enable (RSTEN) command and Reset (RST) command. It returns the device to standby mode. All the volatile bits and settings will be cleared then, which makes the device return to the default status as power on.

To execute Reset command (RST), the Reset-Enable (RSTEN) command must be executed first to perform the Reset operation. If there is any other command to interrupt after the Reset-Enable command, the Reset-Enable will be invalid.

Both SPI (8 clocks) and QPI (2 clocks) command cycle can accept by this instruction. The SIO[3:1] are don't care when during SPI mode.

If the Reset command is executed during program or erase operation, the operation will be disabled, the data under processing could be damaged or lost.

The reset time is different depending on the last operation. For details, please refer to *"Table 15. Reset Timing-(Other Operation)"* for tREADY2.

Figure 74. Software Reset Recovery

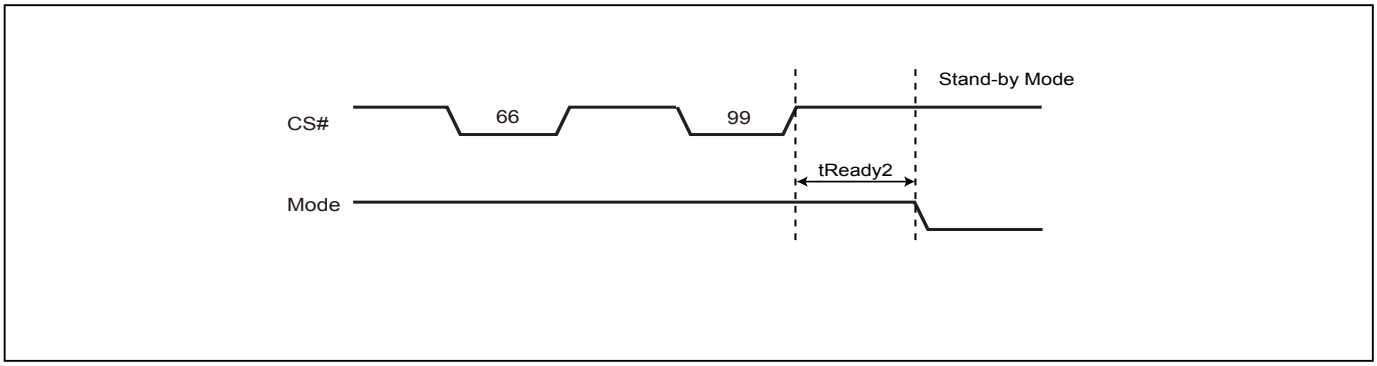

Note: Refer to *"Table 15. Reset Timing-(Other Operation)"* for tREADY2 data.

Figure 75. Reset Sequence (SPI mode)

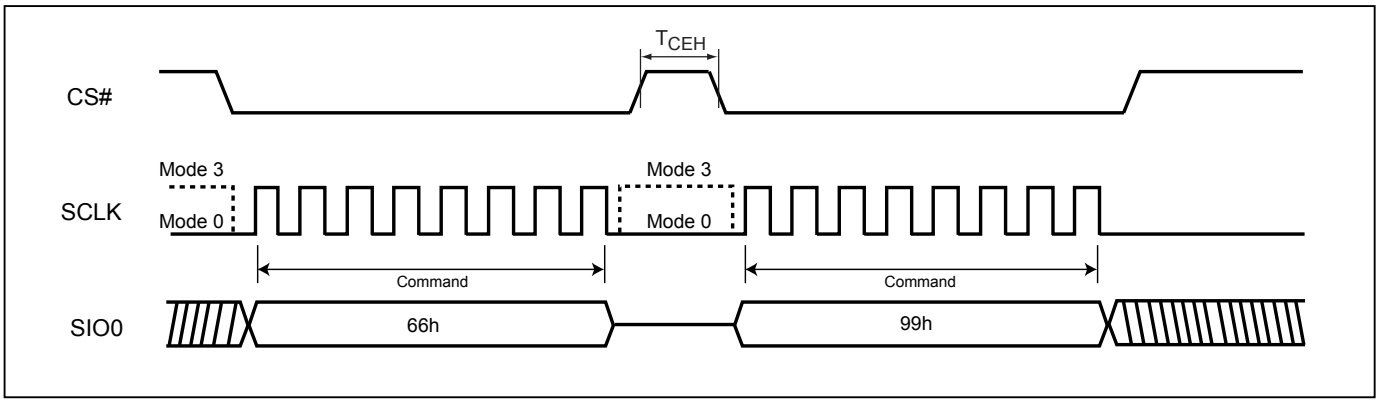

Figure 76. Reset Sequence (QPI mode)

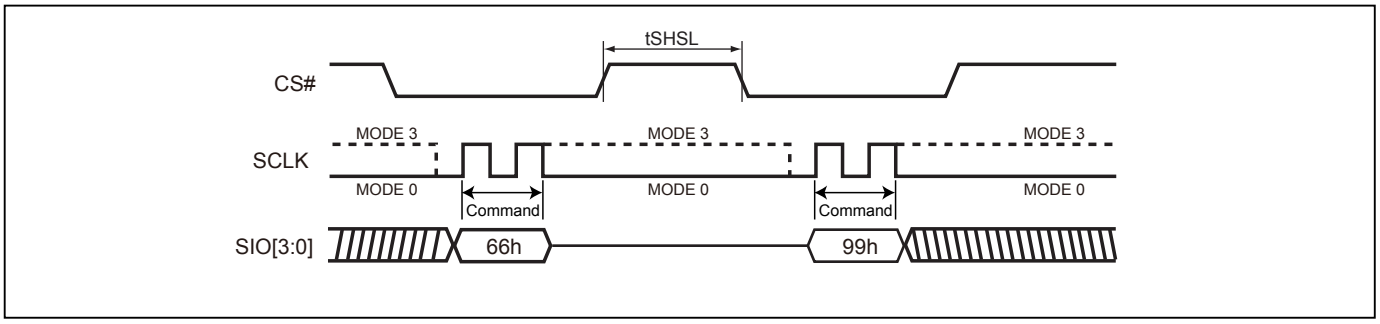

9-42. Read SFDP Mode (RDSFDP)

The Serial Flash Discoverable Parameter (SFDP) standard provides a consistent method of describing the functional and feature capabilities of serial flash devices in a standard set of internal parameter tables. These parameter tables can be interrogated by host system software to enable adjustments needed to accommodate divergent features from multiple vendors. The concept is similar to the one found in the Introduction of JEDEC Standard, JESD68 on CFI.

The sequence of issuing RDSFDP instruction is CS# goes low→send RDSFDP instruction (5Ah)→send 3 address bytes on SI pin→send 1 dummy byte on SI pin→read SFDP code on SO→to end RDSFDP operation can use CS# to high at any time during data out.

SFDP is a JEDEC standard, JESD216.

Figure 77. Read Serial Flash Discoverable Parameter (RDSFDP) Sequence

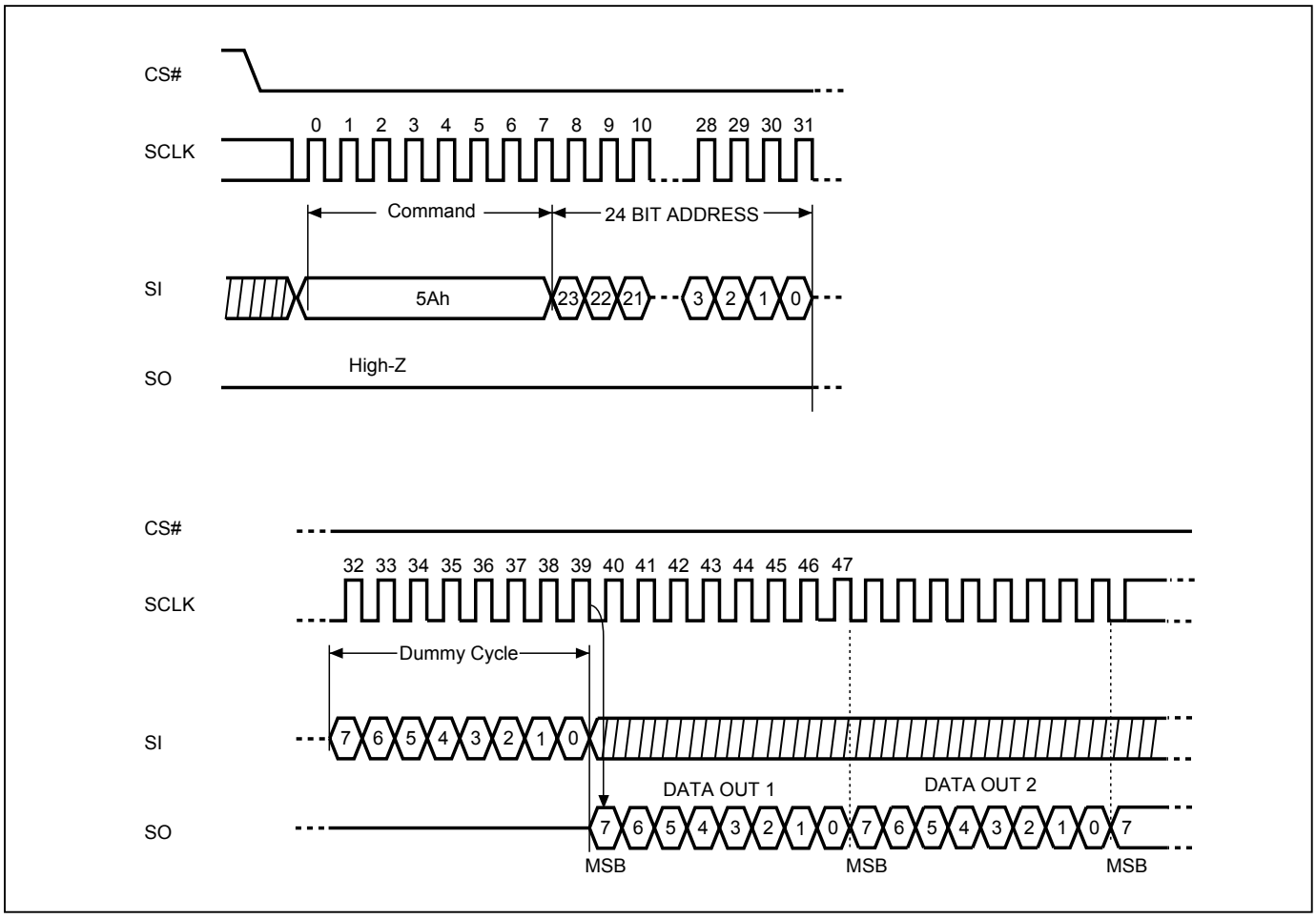

Table 10. Signature and Parameter Identification Data Values

Description	Comment	Add (h) (Byte)	DW Add (Bit)	Data (h/b) (Note1)	Data (h)
SFDP Signature	Fixed: 50444653h	00h	07:00	53h	53h
		01h	15:08	46h	46h
		02h	23:16	44h	44h
		03h	31:24	50h	50h
SFDP Minor Revision Number	Start from 00h	04h	07:00	05h	05h
SFDP Major Revision Number	Start from 01h	05h	15:08	01h	01h
Number of Parameter Headers	This number is 0-based. Therefore, 0 indicates 1 parameter header.	06h	23:16	02h	02h
Reserved		07h	31:24	FFh	FFh
ID number (JEDEC)	00h: it indicates a JEDEC specified header.	08h	07:00	00h	00h
Parameter Table Minor Revision Number	Start from 00h	09h	15:08	05h	05h
Parameter Table Major Revision Number	Start from 01h	0Ah	23:16	01h	01h
Parameter Table Length (in double word)	How many DWORDs in the Parameter table	0Bh	31:24	10h	10h
Parameter Table Pointer (PTP)	First address of JEDEC Flash Parameter table	0Ch	07:00	30h	30h
		0Dh	15:08	00h	00h
		0Eh	23:16	00h	00h
Reserved		0Fh	31:24	FFh	FFh
ID number (Macronix manufacturer ID)	it indicates Macronix manufacturer ID	10h	07:00	C2h	C2h
Parameter Table Minor Revision Number	Start from 00h	11h	15:08	00h	00h
Parameter Table Major Revision Number	Start from 01h	12h	23:16	01h	01h
Parameter Table Length (in double word)	How many DWORDs in the Parameter table	13h	31:24	04h	04h
Parameter Table Pointer (PTP)	First address of Macronix Flash Parameter table	14h	07:00	10h	10h
		15h	15:08	01h	01h
		16h	23:16	00h	00h
Reserved		17h	31:24	FFh	FFh
ID number (RPMC)	RPMC parameter ID	18h	07:00	03h	03h
Parameter Table Minor Revision Number	Start from 00h	19h	15:08	00h	00h
Parameter Table Major Revision Number	Start from 01h	1Ah	23:16	01h	01h
Parameter Table Length (in double word)	How many DWORDs in the Parameter table	1Bh	31:24	02h	02h
Parameter Table Pointer (PTP)	First address of RPMC table	1Ch	07:00	00h	00h
		1Dh	15:08	01h	01h
		1Eh	23:16	00h	00h
Reserved		1Fh	31:24	FFh	FFh

Table 11. Parameter Table (0): JEDEC Flash Parameter Tables

Description	Comment	Add (h) (Byte)	DW Add (Bit)	Data (h/b) (Note1)	Data (h)
Block/Sector Erase sizes	00: Reserved, 01: 4KB erase, 10: Reserved, 11: not support 4KB erase	30h	01:00	01b	E5h
Write Granularity	0: 1Byte, 1: 64Byte or larger		02	1b	
Write Enable Instruction Required for Writing to Volatile Status Registers	0: not required 1: required 00h to be written to the status register		03	0b	
Write Enable Opcode Select for Writing to Volatile Status Registers	0: use 50h opcode, Note: If target flash status register is nonvolatile, then bits 3 and 4 must be set to 00b.		04	0b	
Reserved	Contains 111b and can never be changed		07:05	111b	
4KB Erase Opcode		31h	15:08	20h	20h
(1-1-2) Fast Read (Note2)	0=not support 1=support	32h	16	1b	FBh
Address Bytes Number used in addressing flash array	00: 3Byte only, 01: 3 or 4Byte, 10: 4Byte only, 11: Reserved		18:17	01b	
Double Transfer Rate (DTR) Clocking	0=not support 1=support		19	1b	
(1-2-2) Fast Read	0=not support 1=support		20	1b	
(1-4-4) Fast Read	0=not support 1=support		21	1b	
(1-1-4) Fast Read	0=not support 1=support		22	1b	
Reserved			23	1b	
Reserved		33h	31:24	FFh	FFh
Flash Memory Density		37h:34h	31:00	0FFF FFFFh	
(1-4-4) Fast Read Number of Wait states (Note3)	0 0100b: 4 dummy clocks	38h	04:00	0 0100b	44h
(1-4-4) Fast Read Number of Mode Bits (Note4)	010b: 2 mode bits		07:05	010b	
(1-4-4) Fast Read Opcode		39h	15:08	EBh	EBh
(1-1-4) Fast Read Number of Wait states	0 1000b: 8 dummy clocks	3Ah	20:16	0 1000b	08h
(1-1-4) Fast Read Number of Mode Bits	000b: Mode Bits not support		23:21	000b	
(1-1-4) Fast Read Opcode		3Bh	31:24	6Bh	6Bh

Description	Comment	Add (h) (Byte)	DW Add (Bit)	Data (h/b) (Note1)	Data (h)
(1-1-2) Fast Read Number of Wait states	0 1000b: 8 dummy clocks	3Ch	04:00	0 1000b	08h
(1-1-2) Fast Read Number of Mode Bits	000b: Mode Bits not supported		07:05	000b	
(1-1-2) Fast Read Opcode		3Dh	15:08	3Bh	3Bh
(1-2-2) Fast Read Number of Wait states	0 0100b: 4 dummy clocks	3Eh	20:16	0 0100b	04h
(1-2-2) Fast Read Number of Mode Bits	000b: Mode Bits not supported		23:21	000b	
(1-2-2) Fast Read Opcode		3Fh	31:24	BBh	BBh
(2-2-2) Fast Read	0=not support 1=support	40h	00	0b	FEh
Reserved			03:01	111b	
(4-4-4) Fast Read	0=not support 1=support		04	1b	
Reserved			07:05	111b	
Reserved		43h:41h	31:08	FFh	FFh
Reserved		45h:44h	15:00	FFh	FFh
(2-2-2) Fast Read Number of Wait states	0 0000b: Wait states (Dummy Clocks) not supported	46h	20:16	0 0000b	00h
(2-2-2) Fast Read Number of Mode Bits	010b: 2 mode bits		23:21	000b	
(2-2-2) Fast Read Opcode		47h	31:24	FFh	FFh
Reserved		49h:48h	15:00	FFh	FFh
(4-4-4) Fast Read Number of Wait states	0 0100b: 4 dummy cycles	4Ah	20:16	0 0100b	44h
(4-4-4) Fast Read Number of Mode Bits	010b: 2 mode bits		23:21	010b	
(4-4-4) Fast Read Opcode		4Bh	31:24	EBh	EBh
Sector Type 1 Size	Sector/block size = 2^N bytes (Note5) 4KB	4Ch	07:00	0Ch	0Ch
Sector Type 1 erase Opcode		4Dh	15:08	20h	20h
Sector Type 2 Size	Sector/block size = 2^N bytes 32KB	4Eh	23:16	0Fh	0Fh
Sector Type 2 erase Opcode		4Fh	31:24	52h	52h
Sector Type 3 Size	Sector/block size = 2^N bytes 64KB	50h	07:00	10h	10h
Sector Type 3 erase Opcode		51h	15:08	D8h	D8h
Sector Type 4 Size	Sector/block size = 2^N bytes 0x00b: this sector type doesn't exist	52h	23:16	00h	00h
Sector Type 4 erase Opcode		53h	31:24	FFh	FFh

Description	Comment	Add (h) (Byte)	DW Add (Bit)	Data (h/b) (Note1)	Data (h)
Multiplier for Sector/Chip Erase Time (Maximum)	Multiplier value: 0h~Fh (0~15) Max. time = 2 * (Multiplier + 1) * Typical Time	55h:54h	03:00	0110b	49D6h
Sector Type 1 Erase Time (Typical)	Count value: 00h~1Fh (0~31) Typical Time = (Count + 1) * Units		08:04	1 1101b	
	Units 00: 1ms, 01: 16ms 10b: 128ms, 11b: 1s		10:09	00b	
Sector Type 2 Erase Time (Typical)	Count value: 00h~1Fh (0~31) Typical Time = (Count + 1) * Units		15:11	0 1001b	
	Units 00: 1ms, 01: 16ms 10b: 128ms, 11b: 1s	57h:56h	17:16	01b	00C5h
Sector Type 3 Erase Time (Typical)	Count value: 00h~1Fh (0~31) Typical Time = (Count + 1) * Units		22:18	1 0001b	
	Units 00: 1 ms, 01: 16 ms 10b: 128ms, 11b: 1s		24:23	01b	
Sector Type 4 Erase Time (Typical)	Count value: 00h~1Fh (0~31) Typical Time = (Count + 1) * Units		29:25	0 0000b	
	Units 00: 1ms, 01: 16ms 10b: 128 ms, 11b: 1 s		31:30	00b	
Multiplier for Page/Byte Program Time (Maximum)	Multiplier value: 0h~Fh (0~15) Max. time = 2 * (Multiplier + 1) *Typical Time	58h	03:00	0010b	82h
Page Program Size	Page size = 2^N bytes 2^8 = 256 bytes, 8h = 1000b		07:04	1000h	
Page Program Time (Typical)	Count value: 00h~1Fh (0~31) Typical Time = (Count + 1) * Units	5Ah:59h	12:08	0 0011b	0263h
	Units 0: 8us, 1: 64us		13	1b	
Byte Program Time, First Byte (Typical)	Count value: 0h~Fh (0~15) Typical Time = (Count + 1) * Units		15:14 17:16	1001b	
	Units 0: 1us, 1: 8us		18	0b	
Byte Program Time, Additional Byte (Typical)	Count value: 0h~Fh (0~15) Typical Time = (Count + 1) * Units		22:19	0000b	
	Units 0: 1us, 1: 8us		23	0b	

Description	Comment	Add (h) (Byte)	DW Add (Bit)	Data (h/b) (Note1)	Data (h)
Chip Erase Time (Typical)	Count value: 00h~1Fh (0~31) Typical Time = (Count + 1) * Units	5Bh	28:24	0 0010b	E2h
	Units 00: 16ms, 01: 256ms 10: 4s, 11: 64s		30:29	11b	
Reserved	Reserved: 1b		31	1b	
Prohibited Operations During Program Suspend	◆ xxx0b: May not initiate a new erase anywhere ◆ xx0xb: May not initiate a new page program anywhere ◆ x1xxb: May not initiate a read in the program suspended page size ◆ 1xxxb: The erase and program restrictions in bits 1:0 are sufficient	5Ch	03:00	1100b	CCh
Prohibited Operations During Erase Suspend	◆ xxx0b: May not initiate a new erase anywhere ◆ xx0xb: May not initiate a page program anywhere ◆ x1xxb: May not initiate a read in the erase suspended sector size ◆ 1xxxb: The erase and program restrictions in bits 5:4 are sufficient		07:04	1100b	
Reserved	Reserved: 1b	5Eh:5Dh	08	1b	6703h
Program Resume to Suspend Interval (Typical)	Count value: 0h~Fh (0~15) Typical Time = (Count + 1) * 64us		12:09	0001b	
Program Suspend Latency (Max.)	Count value: 00h~1Fh (0~31) Maximum Time = (Count + 1) * Units		17:13	1 1000b	
	Units 00: 128ns, 01: 1us 10: 8us, 11: 64us		19:18	01b	
Erase Resume to Suspend Interval (Typical)	Count value: 0h~Fh (0~15) Typical Time = (Count + 1) * 64us		23:20	0110b	
Erase Suspend Latency (Max.)	Count value: 00h~1Fh (0~31) Maximum Time = (Count + 1) * Units	5Fh	28:24	1 1000b	38h
	Units 00: 128ns, 01: 1us 10: 8us, 11: 64us		30:29	01b	
Suspend / Resume supported	0= Support 1= Not supported		31	0b	
Program Resume Instruction	Instruction to Resume a Program	60h	07:00	30h	30h
Program Suspend Instruction	Instruction to Suspend a Program	61h	15:08	B0h	B0h
Erase Resume Instruction	Instruction to Resume Write/Erase	62h	23:16	30h	30h
Erase Suspend Instruction	Instruction to Suspend Write/Erase	63h	31:24	B0h	B0h

Description	Comment	Add (h) (Byte)	DW Add (Bit)	Data (h/b) (Note1)	Data (h)
Reserved	Reserved: 11b	64h	01:00	11b	F7h
Status Register Polling Device Busy	• Bit 2: Read WIP bit [0] by 05h Read instruction • Bit 3: Read bit 7 of Status Register by 70h Read instruction (0=not support 1=support) • Bit 07:04, Reserved: 1111b		07:02	1111 01b	
Release from Deep Power-down (RDP) Delay (Max.)	Count value: 00h~1Fh (0~31) Maximum Time = (Count + 1) * Units	67h:65h	12:08	1 1110b	5CD5BEh
	Units 00: 128ns, 01: 1us 10: 8us, 11: 64us		14:13	01b	
Release from Deep Power-down (RDP) Instruction	Instruction to Exit Deep Power Down		22:15	1010 1011b (ABh)	
Enter Deep Power Down Instruction	Instruction to Enter Deep Power Down		30:23	1011 1001 (B9h)	
Deep Power Down Supported	0: Supported 1: Not supported		31	0b	
4-4-4 Mode Disable Sequences	Supported Methods to Reset QPI Mode • xx1xb: issue F5h instruction	69h:68h	03:00	0010b	FF42h
4-4-4 Mode Enable Sequences	Supported methods to enter QPI mode • x_x1xxb: issue instruction 35h • 1_xxxxb: Reserved		08:04	1 0100b	
0-4-4 mode Supported	Performance Enhance Mode, Continuous Read, Execute in Place 0: Not supported 1: Supported		09	1b	
0-4-4 Mode Exit Method	Exit Performance Enhance Mode • xx_xxx1b: Mode Bits[7:0] = 00h will terminate this mode at the end of the current read peration. • xx_x1xxb: Reserved • x1_xxxxb: Reserved • 1x_xxxxb: Reserved		15:10	11 1111b	
0-4-4 Mode Entry Method	Enter Performance Enhance Mode • xxx1b: Mode Bits[7:0] = A5h Note: QE must be set prior to using this mode • x1xxb: Reserved • 1xxxb: Reserved	6Ah	19:16	1111h	2Fh
Quad Enable (QE) bit Requirements	• 010b: QE is bit 6 of Status Register. where 1=Quad Enable or 0=not Quad Enable		22:20	010b	
HOLD and WP Disable by bit 4 of Extended Configuration Register	0: Not supported		23	0b	
Reserved		6Bh	31:24	FFh	FFh

Description	Comment	Add (h) (Byte)	DW Add (Bit)	Data (h/b) (Note1)	Data (h)
Volatile or Non-Volatile Register and Write Enable Instruction for Status Register 1	◆ xxx_xxx1b: Non-Volatile Status Register 1, powers-up to last written value, use instruction 06h to enable write ◆ x1x_xxxxb: Reserved ◆ 1xx_xxxxb: Reserved	6Ch	06:00	111 1111b	FFh
Reserved			07	1b	
Soft Reset and Rescue Sequence Support	Return the device to its default power-on state ◆ x1_xxxxb: issue reset enable instruction 66h, then issue reset instruction 99h.	6Dh	13:08	11 1111b	FFh
Exit 4-Byte Addressing	◆ xx_xxxx_xxx1b: issue instruction E9h to exit 4-Byte address mode (write enable instruction 06h is not required) ◆ xx_xxxx_x1xxb: 8-bit volatile extended address register used to define A[31:A24] bits. Read with instruction C8h. Write instruction is C5h, data length is 1 byte. Return to lowest memory segment by setting A[31:24] to 00h and use 3-Byte addressing. ◆ xx_xx1x_xxxxb: Hardware reset ◆ xx_x1xx_xxxxb: Software reset (see bits 13:8 in this DWORD) ◆ xx_1xxx_xxxxb: Power cycle ◆ x1_xxxx_xxxxb: Reserved ◆ 1x_xxxx_xxxxb: Reserved	6Dh	15:14	11b	FFh
		6Eh	23:16	1111 1111b	FFh

Description	Comment	Add (h) (Byte)	DW Add (Bit)	Data (h/b) (Note1)	Data (h)
Enter 4-Byte Addressing	◆ xxxx_xxx1b: issue instruction B7h (preceding write enable not required) ◆ xxxx_x1xxb: 8-bit volatile extended address register used to define A[31:24] bits. Read with instruction C8h. Write instruction is C5h with 1 byte of data. Select the active 128 Mbit memory segment by setting the appropriate A[31:24] bits and use 3-Byte addressing. ◆ xx1x_xxxxb: Supports dedicated 4-Byte address instruction set. Consult vendor data sheet for the instruction set definition. ◆ 1xxx_xxxxb: Reserved	6Fh	31:24	1111 1111b	FFh

Table 12. RPMC Parameter

Description	Comment	Add (h) (Byte)	DW Add (Bit)	Data (h/b) (Note1)	Data (h)
Flash_Hardening	0=Flash Hardening is supported. 1=Flash Hardening is not supported	100h	00	1b	FFh
MC_Size	0= Monotonic counter size is 32 bit 1= Reserved		01	1b	
Busy_Polling_Method :	0= Poll for OP1 busy using OP2 Extended Status[0] 1= Poll for OP1 busy using Status		02	1b	
Reserved			03	1b	
Num_Counter-1:	Number of supported counters-1.		07:04	1111b	
OP1 Opcode		101h	15:08	FFh	FFh
OP2 Opcode		102h	23:16	FFh	FFh
Update_Rate	: Rate of Update = 5 * (2 ^ Update_ Rate) seconds	103h	27:24	1111b	FFh
Reserved	: Must be 0FH		31:28	Fh	
Read Counter Polling Delay Typical case to calculate HMAC two times	0 : polling delay_read counter	104h	04:00	11111b	FFh
	units (00=1us, 01=16us, 10=128us, 11=1ms)		06:05	11b	
	reserved		07	1b	
Write Counter Polling Short Delay	0 : polling_short_delay_write_ counter	105h	12:08	11111b	FFh
	units (00=1us, 01=16us, 10=128us, 11=1ms)		14:13	11b	
	reserved		15	1b	
Write Counter Polling Long Delay	Bits4:0 : polling_long_delay_write_ counter	106h	20:16	11111b	FFh
	Bits 6:5 : units (00=1ms, 01=16ms,10=128ms, 11= 1s)		22:21	11b	
	Bit 7 : reserved		23	1b	
Reserved	: Must be FF	107h	31:24	FFh	FFh

Table 13. Parameter Table (1): Macronix Flash Parameter Tables

Description	Comment	Add (h) (Byte)	DW Add (Bit)	Data (h/b) (Note1)	Data (h)
Vcc Supply Maximum Voltage	2000h=2.000V 2700h=2.700V 3600h=3.600V	111h:110h	07:00 15:08	00h 36h	00h 36h
Vcc Supply Minimum Voltage	1650h=1.650V 2250h=2.250V 2350h=2.350V 2700h=2.700V	113h: 112h	23:16 31:24	00h 27h	00h 27h
H/W Reset# pin	0=not support 1=support	115h: 114h	00	1b	F99Dh
H/W Hold# pin	0=not support 1=support		01	0b	
Deep Power Down Mode	0=not support 1=support		02	1b	
S/W Reset	0=not support 1=support		03	1b	
S/W Reset Opcode	Reset Enable (66h) should be issued before Reset Opcode		11:04	1001 1001b (99h)	
Program Suspend/Resume	0=not support 1=support		12	1b	
Erase Suspend/Resume	0=not support 1=support		13	1b	
Reserved			14	1b	
Wrap-Around Read mode	0=not support 1=support		15	1b	
Wrap-Around Read mode Opcode		116h	23:16	C0h	C0h
Wrap-Around Read data length	08h:support 8B wrap-around read 16h:8B&16B 32h:8B&16B&32B 64h:8B&16B&32B&64B	117h	31:24	64h	64h
Individual block lock	0=not support 1=support	11Bh: 118h	00	1b	CF8Fh
Individual block lock bit (Volatile/Nonvolatile)	0=Volatile 1=Nonvolatile		01	1b	
Individual block lock Opcode			09:02	1110 0011b E3h	
Individual block lock Volatile protect bit default protect status	0=protect 1=unprotect		10	1b	
Secured OTP	0=not support 1=support		11	1b	
Read Lock	0=not support 1=support		12	0b	
Permanent Lock	0=not support 1=support		13	0b	
Reserved			15:14	11b	
Reserved			31:16	FFh	FFh
Reserved		11Fh: 11Ch	31:00	FFh	FFh

Note 1: h/b is hexadecimal or binary.

Note 2: **(x-y-z)** means I/O mode nomenclature used to indicate the number of active pins used for the opcode (x), address (y), and data (z). At the present time, the only valid Read SFDP instruction modes are: (1-1-1), (2-2-2), and (4-4-4)

Note 3: **Wait States** is required dummy clock cycles after the address bits or optional mode bits.

Note 4: **Mode Bits** is optional control bits that follow the address bits. These bits are driven by the system controller if they are specified. (eg,read performance enhance toggling bits)

Note 5: 4KB=2^0Ch,32KB=2^0Fh,64KB=2^10h

Note 6: All unused and undefined area data is blank FFh for SFDP Tables that are defined in Parameter Identification Header. All other areas beyond defined SFDPTable are reserved by Macronix.

10. RESET

Driving the RESET# pin low for a period of tRLRH or longer will reset the device. After reset cycle, the device is at the following states:
- Standby mode
- All the volatile bits such as WEL/WIP/SRAM lock bit will return to the default status as power on.
- 3-byte address mode

If the device is under programming or erasing, driving the RESET# pin low will also terminate the operation and data could be lost. During the resetting cycle, the SO data becomes high impedance and the current will be reduced to minimum.

Figure 78. RESET Timing

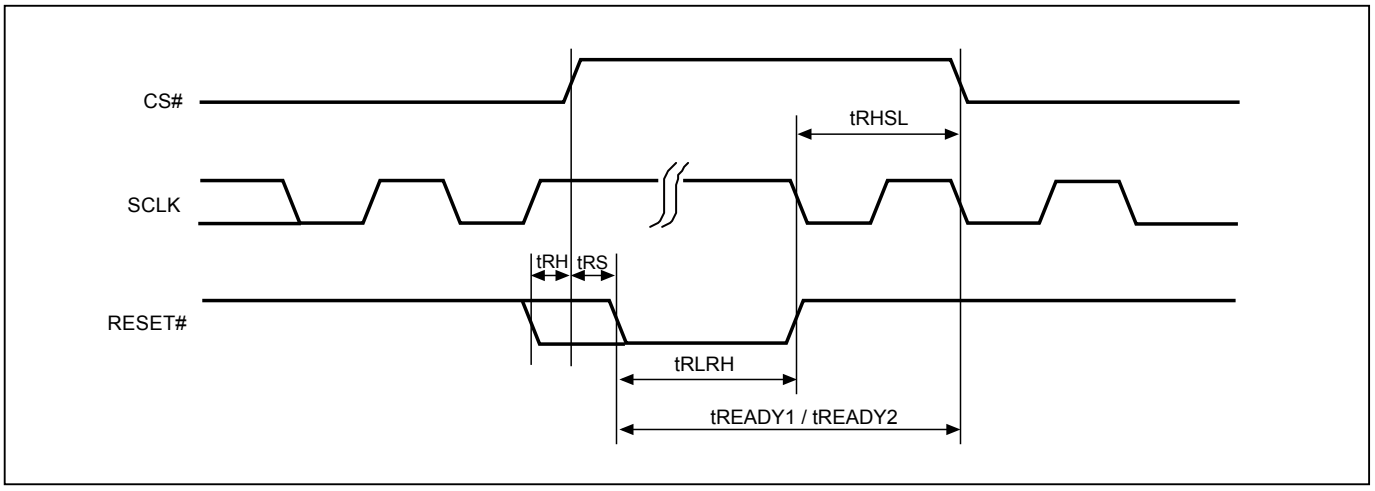

Table 14. Reset Timing-(Power On)

Symbol	Parameter	Min.	Typ.	Max.	Unit
tRHSL	Reset# high before CS# low	10			us
tRS	Reset# setup time	15			ns
tRH	Reset# hold time	15			ns
tRLRH	Reset# low pulse width	10			us
tREADY1	Reset Recovery time	35			us

Table 15. Reset Timing-(Other Operation)

Symbol	Parameter	Min.	Typ.	Max.	Unit
tRHSL	Reset# high before CS# low	10			us
tRS	Reset# setup time	15			ns
tRH	Reset# hold time	15			ns
tRLRH	Reset# low pulse width	10			us
tREADY2	Reset Recovery time (During instruction decoding)	40			us
	Reset Recovery time (for read operation)	35			us
	Reset Recovery time (for program operation)	310			us
	Reset Recovery time(for SE4KB operation)	12			ms
	Reset Recovery time (for BE64K/BE32KB operation)	25			ms
	Reset Recovery time (for Chip Erase operation)	100			ms
	Reset Recovery time (for WRSR operation)	40			ms

11. POWER-ON STATE

The device is at below states when power-up:
- Standby mode (please note it is not deep power-down mode)
- Write Enable Latch (WEL) bit is reset

The device must not be selected during power-up and power-down stage unless the VCC achieves below correct level:
- VCC minimum at power-up stage and then after a delay of tVSL
- GND at power-down

Please note that a pull-up resistor on CS# may ensure a safe and proper power-up/down level.

An internal power-on reset (POR) circuit may protect the device from data corruption and inadvertent data change during power up state. When VCC is lower than VWI (POR threshold voltage value), the internal logic is reset and the flash device has no response to any command.

For further protection on the device, if the VCC does not reach the VCC minimum level, the correct operation is not guaranteed. The write, erase, and program command should be sent after the below time delay:
- tVSL after VCC reached VCC minimum level

The device can accept read command after VCC reached VCC minimum and a time delay of tVSL.
Please refer to the "*power-up timing*".

Note:
- To stabilize the VCC level, the VCC rail decoupled by a suitable capacitor close to package pins is recommended. (generally around 0.1uF)
- At power-down stage, the VCC drops below VWI level, all operations are disable and device has no response to any command. The data corruption might occur during the stage while a write, program, erase cycle is in progress.

12. ELECTRICAL SPECIFICATIONS

Table 16. ABSOLUTE MAXIMUM RATINGS

RATING		VALUE
Ambient Operating Temperature	Industrial grade	-40°C to 85°C
Storage Temperature		-65°C to 150°C
Applied Input Voltage		-0.5V to VCC+0.5V
Applied Output Voltage		-0.5V to VCC+0.5V
VCC to Ground Potential		-0.5V to 4.0V

NOTICE:
1. Stresses greater than those listed under ABSOLUTE MAXIMUM RATINGS may cause permanent damage to the device. This is stress rating only and functional operational sections of this specification is not implied. Exposure to absolute maximum rating conditions for extended period may affect reliability.
2. Specifications contained within the following tables are subject to change.
3. During voltage transitions, all pins may overshoot Vss to -2.0V and Vcc to +2.0V for periods up to 20ns, see *"Figure 79. Maximum Negative Overshoot Waveform"* and *"Figure 80. Maximum Positive Overshoot Waveform"*.

Figure 79. Maximum Negative Overshoot Waveform

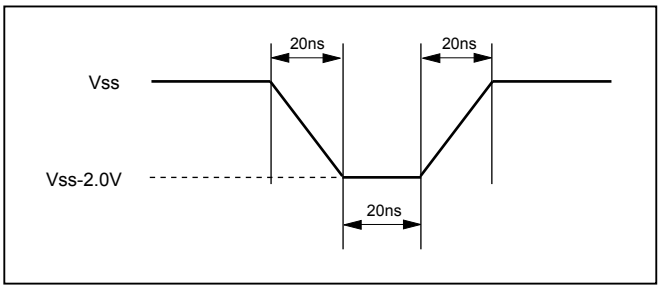

Figure 80. Maximum Positive Overshoot Waveform

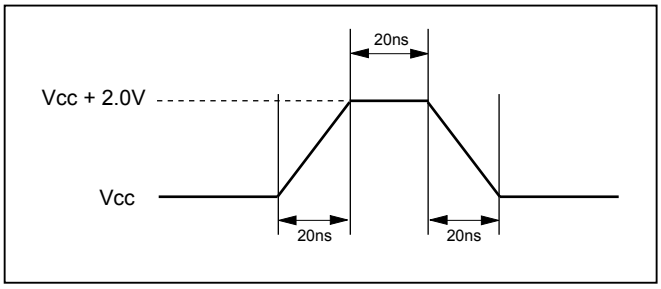

Table 17. CAPACITANCE TA = 25°C, f = 1.0 MHz

Symbol	Parameter	Min.	Typ.	Max.	Unit	Conditions
CIN	Input Capacitance			8	pF	VIN = 0V
COUT	Output Capacitance			10	pF	VOUT = 0V

Figure 81. INPUT TEST WAVEFORMS AND MEASUREMENT LEVEL

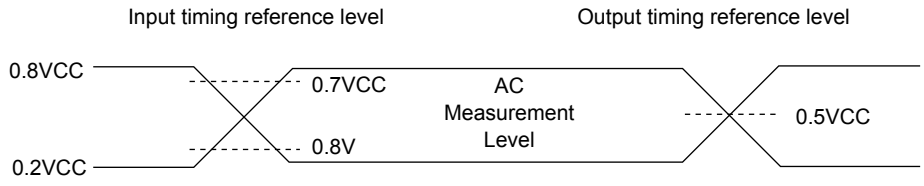

Note: Input pulse rise and fall time are <5ns

Figure 82. OUTPUT LOADING

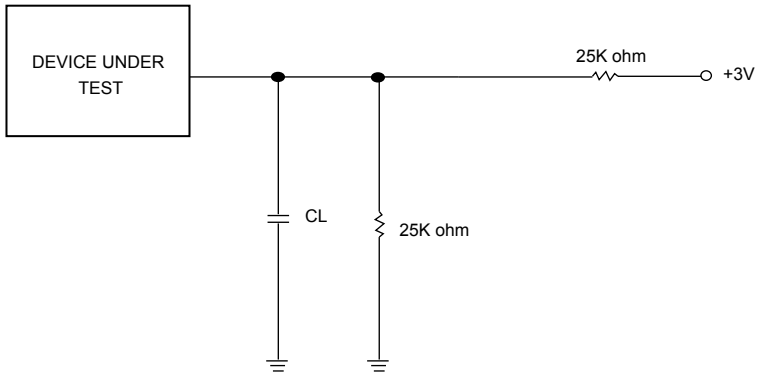

CL=30pF Including jig capacitance

Table 18. DC CHARACTERISTICS (Temperature = -40°C to 85°C, VCC = 2.7V ~ 3.6V)

Symbol	Parameter	Notes	Min.	Typ.	Max.	Units	Test Conditions
ILI	Input Load Current	1			±2	uA	VCC = VCC Max, VIN = VCC or GND
ILO	Output Leakage Current	1			±2	uA	VCC = VCC Max, VOUT = VCC or GND
ISB1	VCC Standby Current	1		15	50	uA	VIN = VCC or GND, CS# = VCC
ISB2	Deep Power-down Current			3	20	uA	VIN = VCC or GND, CS# = VCC
ICC1	VCC Read	1		12	25	mA	f=133MHz, (4 x I/O read) SCLK=0.1VCC/0.9VCC, SO=Open
					20	mA	f=104MHz, (4 x I/O read) SCLK=0.1VCC/0.9VCC, SO=Open
					15	mA	f=84MHz, SCLK=0.1VCC/0.9VCC, SO=Open
ICC2	VCC Program Current (PP)	1		12	20	mA	Program in Progress, CS# = VCC
ICC3	VCC Write Status Register (WRSR) Current			10	12	mA	Program status register in progress, CS#=VCC
ICC4	VCC Sector/Block (32K, 64K) Erase Current (SE/BE/BE32K)	1		10	25	mA	Erase in Progress, CS#=VCC
ICC5	VCC Chip Erase Current (CE)	1		14	25	mA	Erase in Progress, CS#=VCC
VIL	Input Low Voltage		-0.5		0.8	V	
VIH	Input High Voltage		0.7VCC		VCC+0.4	V	
VOL	Output Low Voltage				0.2	V	IOL = 100uA
VOH	Output High Voltage		VCC-0.2			V	IOH = -100uA

Notes :

1. Typical values at VCC = 3.3V, T = 25°C. These currents are valid for all product versions (package and speeds).
2. Typical value is calculated by simulation.

Table 19. AC CHARACTERISTICS (Temperature = -40°C to 85°C, VCC = 2.7V ~ 3.6V)

Symbol	Alt.	Parameter		Min.	Typ.	Max.	Unit
fSCLK	fC	Clock Frequency for all commands (except Read)		D.C.		120	MHz
fRSCLK	fR	Clock Frequency for READ instructions				50	MHz
fTSCLK	fT	Clock Frequency for 2READ instructions				80(5)	MHz
	fQ	Clock Frequency for 4READ instructions				80(5)	MHz
tCH(1)	tCLH	Clock High Time	Others (fSCLK)	3.3			ns
			Normal Read (fRSCLK)	7			ns
tCL(1)	tCLL	Clock Low Time	Others (fSCLK)	3.3			ns
			Normal Read (fRSCLK)	7			ns
tCLCH(2)		Clock Rise Time (peak to peak)		0.1			V/ns
tCHCL(2)		Clock Fall Time (peak to peak)		0.1			V/ns
tSLCH	tCSS	CS# Active Setup Time (relative to SCLK)		3			ns
tCHSL		CS# Not Active Hold Time (relative to SCLK)		3			ns
tDVCH	tDSU	Data In Setup Time		2			ns
tCHDX	tDH	Data In Hold Time		2			ns
tCHSH		CS# Active Hold Time (relative to SCLK)		3			ns
tSHCH		CS# Not Active Setup Time (relative to SCLK)		3			ns
tSHSL	tCSH	CS# Deselect Time	Read	7			ns
			Write/Erase/Program	30			ns
tSHQZ(2)	tDIS	Output Disable Time				8	ns
tCLQV	tV	Clock Low to Output Valid Loading: 30pF/15pF	Loading: 30pF			8	ns
			Loading: 15pF			6	ns
tCLQX	tHO	Output Hold Time		0			ns
tWHSL(3)		Write Protect Setup Time		20			ns
tSHWL(3)		Write Protect Hold Time		100			ns
tDP(2)		CS# High to Deep Power-down Mode				10	us
tRES1(2)		CS# High to Standby Mode without Electronic Signature Read				30	us
tRES2(2)		CS# High to Standby Mode with Electronic Signature Read				30	us
tW		Write Status/Configuration Register Cycle Time				40	ms
tWREAW		Write Extended Address Register			40		ns
tBP		Byte-Program			10	30	us
tPP		Page Program Cycle Time			0.25	1.5	ms
tSE		Sector Erase Cycle Time			30	400	ms
tBE32		Block Erase (32KB) Cycle Time			150	1000	ms
tBE		Block Erase (64KB) Cycle Time			280	2000	ms
tCE		Chip Erase Cycle Time			150	400	s
tESL(6)		Erase Suspend Latency				25	us
tPSL(6)		Program Suspend Latency				25	us
tPRS(7)		Latency between Program Resume and next Suspend		0.3	100		us
tERS(8)		Latency between Erase Resume and next Suspend		0.3	400		us

Notes:

1. tCH + tCL must be greater than or equal to 1/ Frequency.
2. Typical values given for TA=25°C. Not 100% tested.
3. Only applicable as a constraint for a WRSR instruction when SRWD is set at 1.
4. Test condition is shown as *Figure 81* and *Figure 82*.
5. By default dummy cycle value. Please refer to the *"Table 1. Read performance Comparison"*.
6. Latency time required to complete Erase/Program Suspend operation until WIP bit is "0".
7. For tPRS, minimum timing must be observed before issuing the next program suspend command. However, a period equal to or longer than the typical timing is required in order for the program operation to make progress.
8. For tERS, minimum timing must be observed before issuing the next erase suspend command. However, a period equal to or longer than the typical timing is required in order for the erase operation to make progress.

13. OPERATING CONDITIONS

At Device Power-Up and Power-Down

AC timing illustrated in *Figure 83* and *Figure 84* are for the supply voltages and the control signals at device power-up and power-down. If the timing in the figures is ignored, the device will not operate correctly.

During power-up and power-down, CS# needs to follow the voltage applied on VCC to keep the device not to be selected. The CS# can be driven low when VCC reach Vcc(min.) and wait a period of tVSL.

Figure 83. AC Timing at Device Power-Up

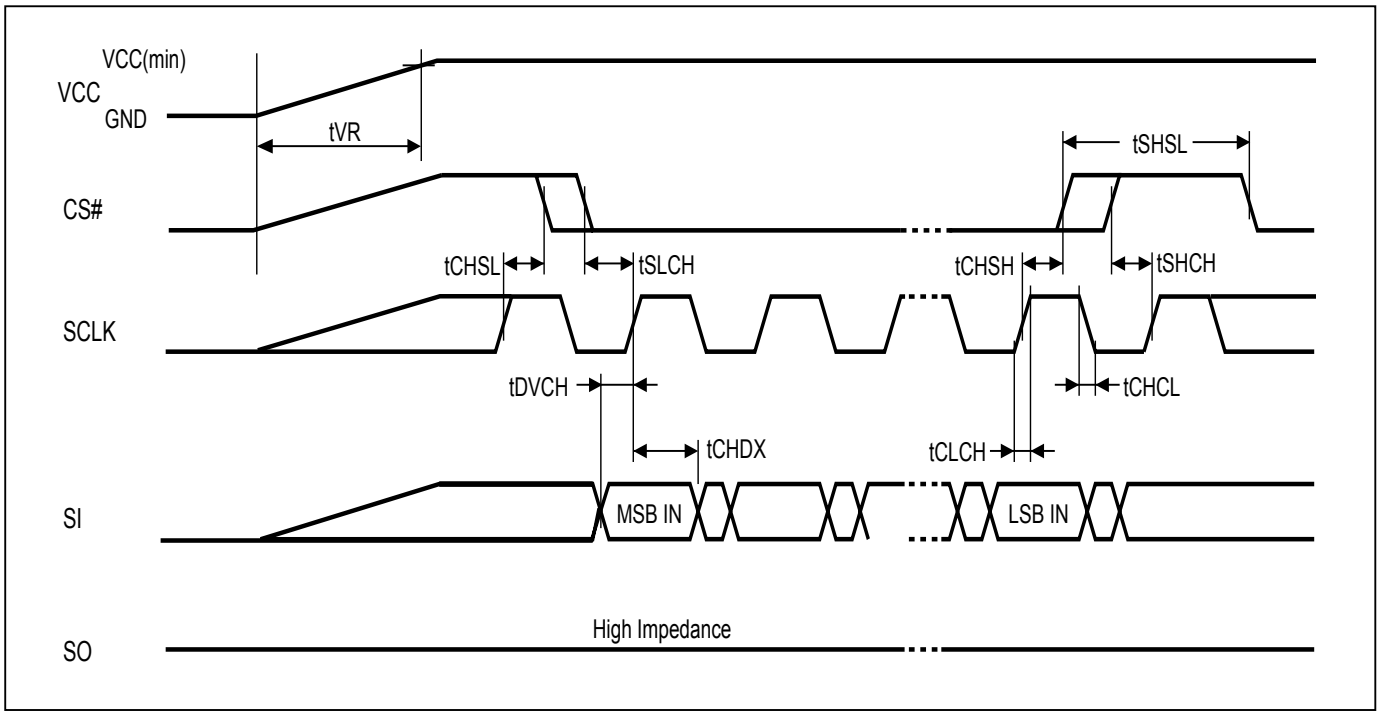

Symbol	Parameter	Notes	Min.	Max.	Unit
tVR	VCC Rise Time	1	20	500000	us/V

Notes :
1. Sampled, not 100% tested.
2. For AC spec tCHSL, tSLCH, tDVCH, tCHDX, tSHSL, tCHSH, tSHCH, tCHCL, tCLCH in the figure, please refer to *Table 19.* AC CHARACTERISTICS.

Figure 84. Power-Down Sequence

During power-down, CS# needs to follow the voltage drop on VCC to avoid mis-operation.

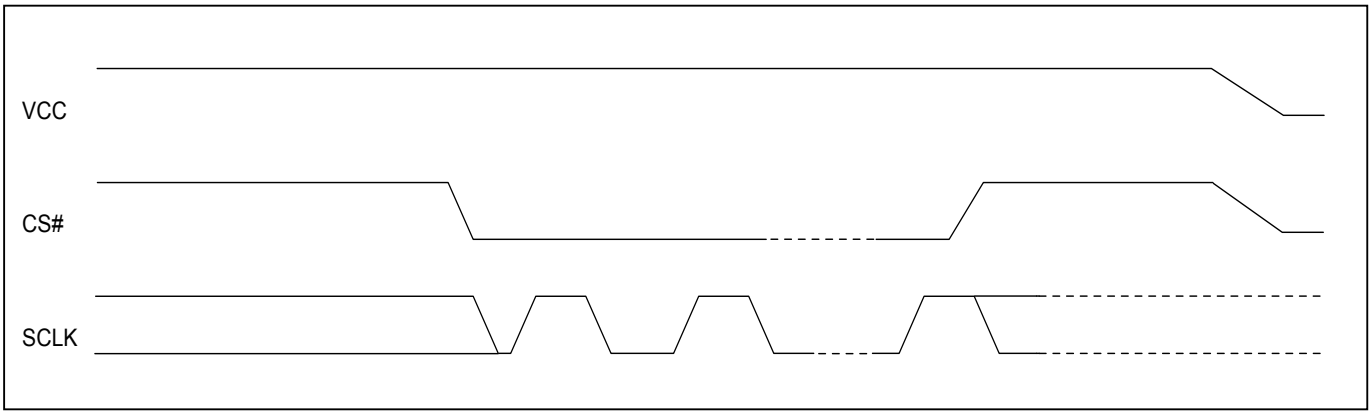

Figure 85. Power-up Timing

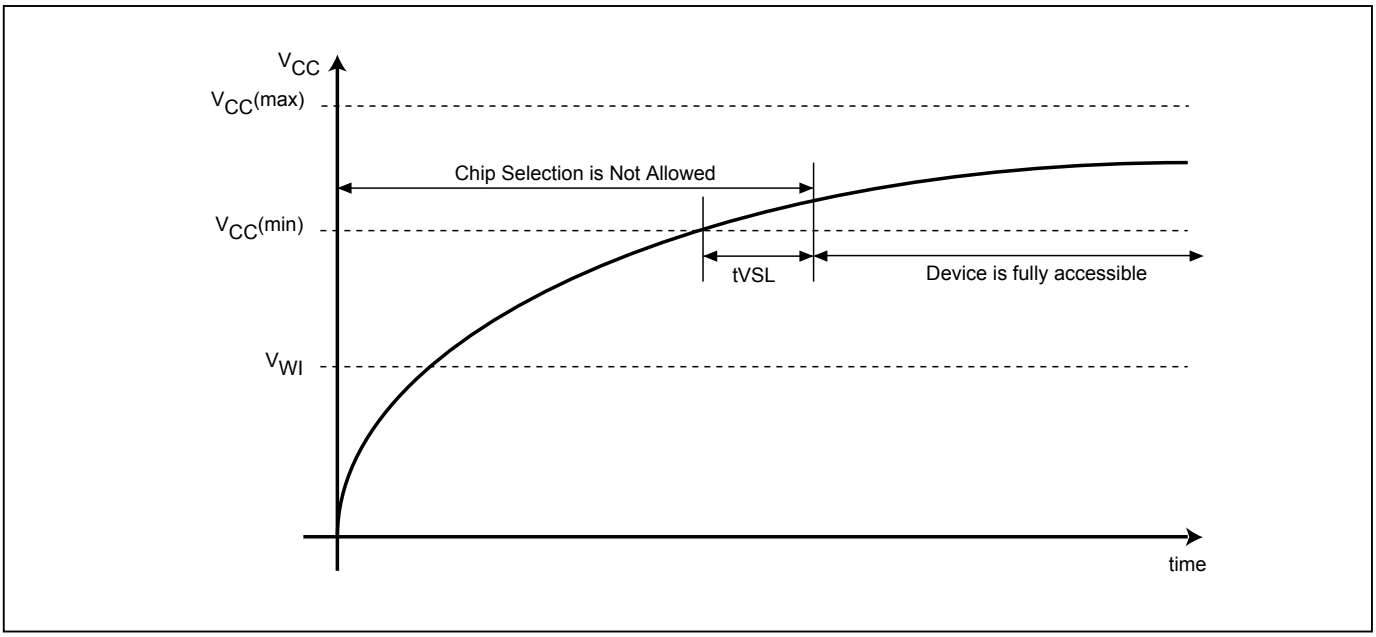

Figure 86. Power Up/Down and Voltage Drop

For Power-down to Power-up operation, the VCC of flash device must below V_{PWD} for at least tPWD timing. Please check the table below for more detail.

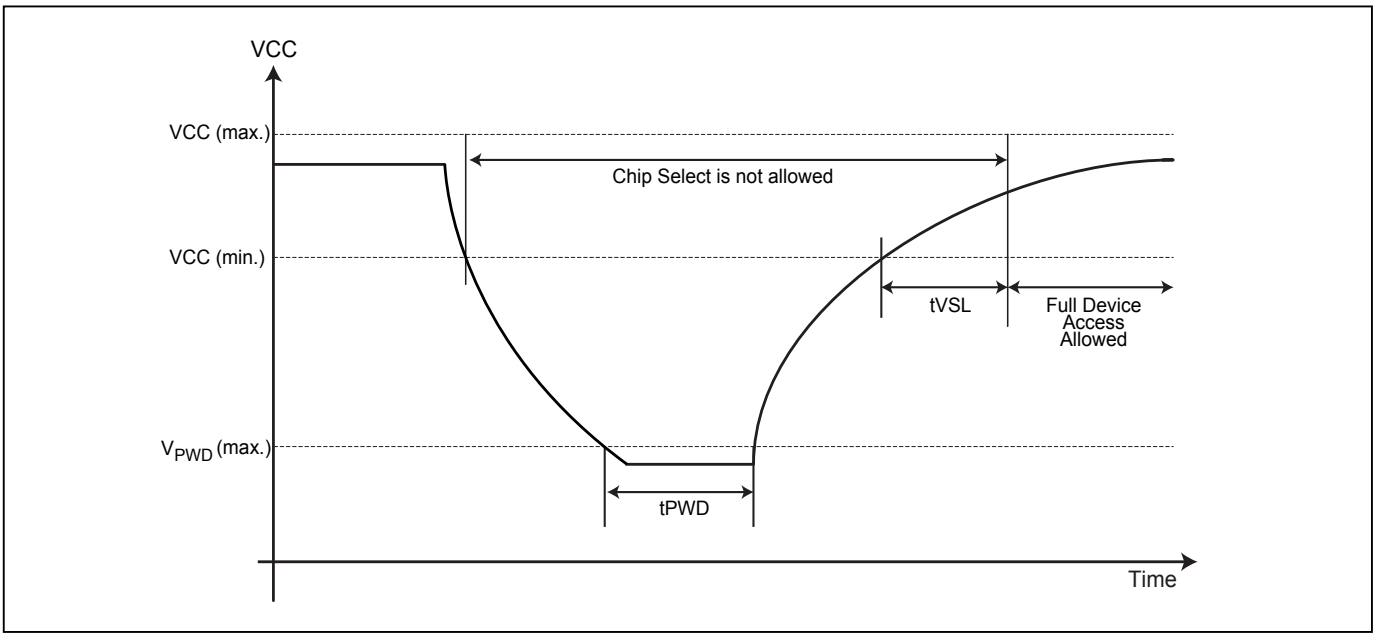

Table 20. Power-Up/Down Voltage and Timing

Symbol	Parameter	Min.	Max.	Unit
tVSL	VCC(min.) to device operation	1500		us
VWI	Write Inhibit Voltage	1.5	2.5	V
V_{PWD}	VCC voltage needed to below V_{PWD} for ensuring initialization will occur		0.9	V
tPWD	The minimum duration for ensuring initialization will occur	300		us
tVR	VCC Rise Time	20	500000	us/V
VCC	VCC Power Supply	2.7	3.6	V

Note: These parameters are characterized only.

13-1. INITIAL DELIVERY STATE

The device is delivered with the memory array erased: all bits are set to 1 (each byte contains FFh). The Status Register contains 00h (all Status Register bits are 0).

14. ERASE AND PROGRAMMING PERFORMANCE

Parameter	Min.	Typ. (1)	Max. (2)	Unit
Write Status Register Cycle Time			40	ms
Sector Erase Cycle Time (4KB)		30	400	ms
Block Erase Cycle Time (32KB)		0.15	1	s
Block Erase Cycle Time (64KB)		0.28	2	s
Chip Erase Cycle Time		150	400	s
Byte Program Time (via page program command)		10	30	us
Page Program Time		0.25	1.5	ms
Erase/Program Cycle		100,000		cycles

Note:
1. Typical program and erase time assumes the following conditions: 25°C, 3.3V, and all zero pattern.
2. Under worst conditions of 85°C and 2.7V.
3. System-level overhead is the time required to execute the first-bus-cycle sequence for the programming command.
4. The maximum chip programming time is evaluated under the worst conditions of 0°C, VCC=3.3V, and 100K cycle with 90% confidence level.

15. DATA RETENTION

Parameter	Condition	Min.	Max.	Unit
Data retention	55˚C	20		years

16. LATCH-UP CHARACTERISTICS

	Min.	Max.
Input Voltage with respect to GND on all power pins, SI, CS#	-1.0V	2 VCCmax
Input Voltage with respect to GND on SO	-1.0V	VCC + 1.0V
Current	-100mA	+100mA
Includes all pins except VCC. Test conditions: VCC = 3.0V, one pin at a time.		

17. ORDERING INFORMATION

PART NO.	CLOCK (MHz)	TEMPERATURE	PACKAGE	Remark
MX25L25645GMI-10G	104	-40°C~85°C	16-SOP (300mil)	
MX25L25645GM2I-10G	104	-40°C~85°C	8-SOP(200mil)	
MX25L25645GZ2I-10G	104	-40°C~85°C	8-WSON (8x6mm)	

18. PART NAME DESCRIPTION

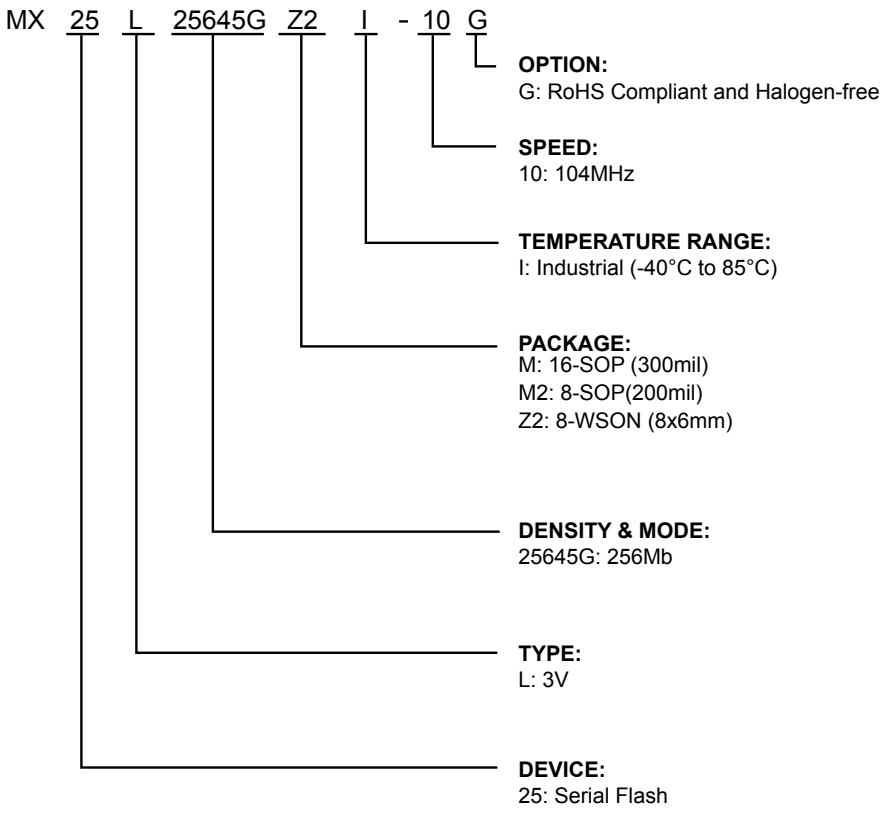

19. PACKAGE INFORMATION

Doc. Title: Package Outline for SOP 16L (300MIL)

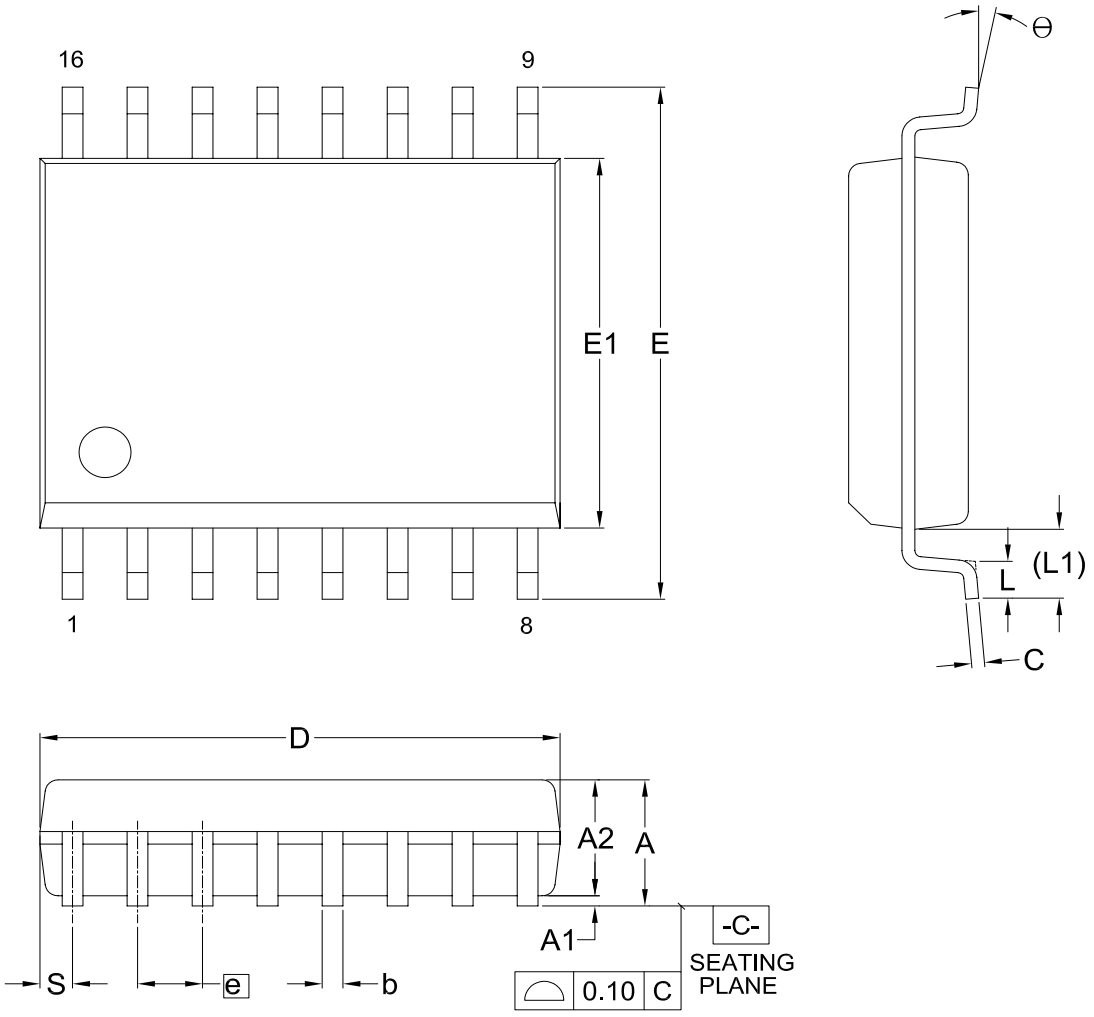

Dimensions (inch dimensions are derived from the original mm dimensions)

SYMBOL / UNIT		A	A1	A2	b	C	D	E	E1	e	L	L1	S	θ
mm	Min.	---	0.10	2.25	0.31	0.20	10.10	10.10	7.42	---	0.40	1.31	0.51	0°
	Nom.	---	0.20	2.35	0.41	0.25	10.30	10.30	7.52	1.27	0.84	1.44	0.64	5°
	Max.	2.65	0.30	2.45	0.51	0.30	10.50	10.50	7.60	---	1.27	1.57	0.77	8°
Inch	Min.	---	0.004	0.089	0.012	0.008	0.397	0.397	0.292	---	0.016	0.052	0.020	0°
	Nom.	---	0.008	0.093	0.016	0.010	0.405	0.405	0.296	0.050	0.033	0.057	0.025	5°
	Max.	0.104	0.012	0.096	0.020	0.012	0.413	0.413	0.299	---	0.050	0.062	0.030	8°

Dwg. No.	Revision	Reference			
		JEDEC	EIAJ		
6110-1402	13	MS-013			

Doc. Title: Package Outline for SOP 8L 200MIL (official name - 209MIL)

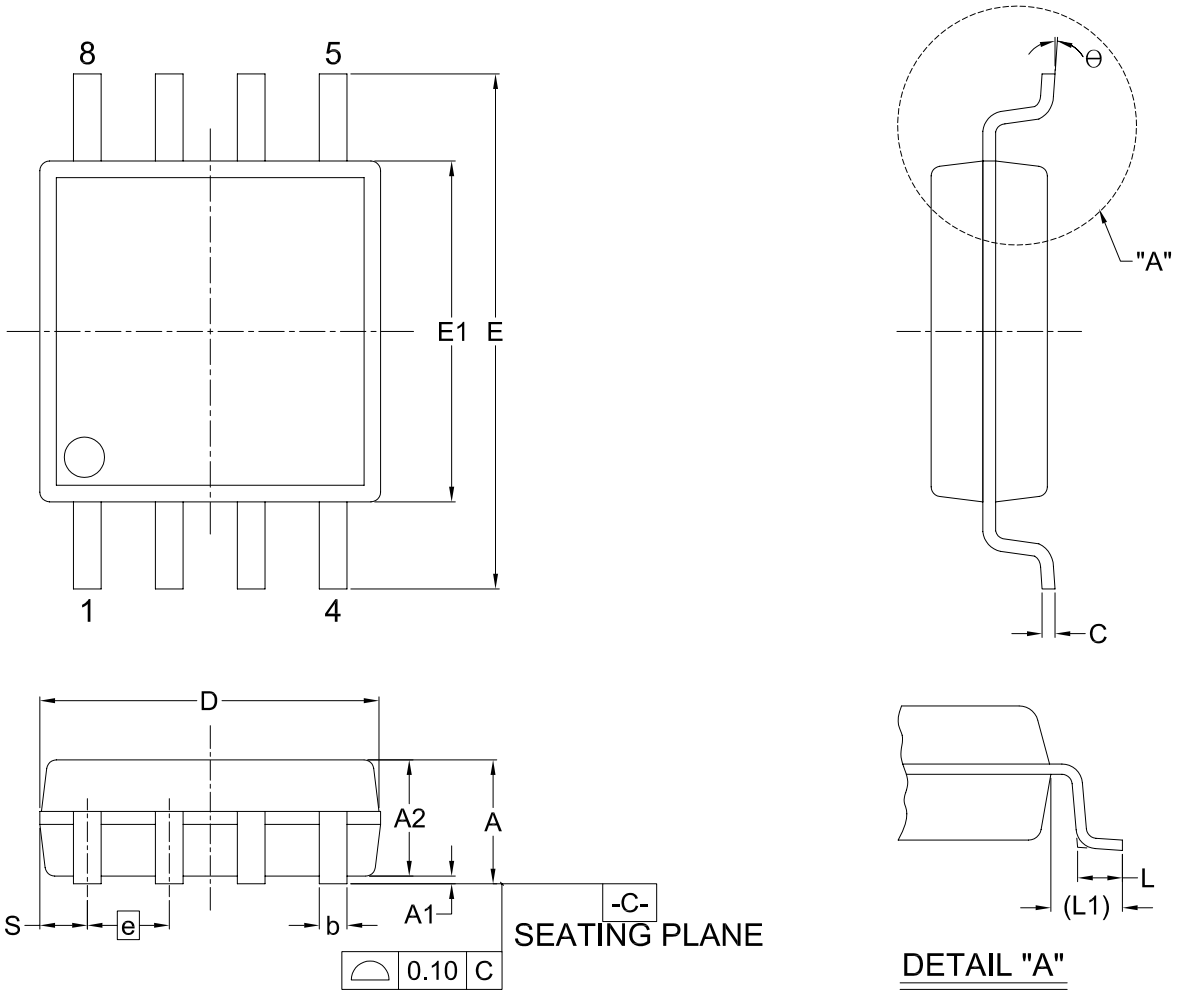

Dimensions (inch dimensions are derived from the original mm dimensions)

SYMBOL / UNIT		A	A1	A2	b	C	D	E	E1	e	L	L1	S	θ
mm	Min.	1.75	0.05	1.70	0.36	0.19	5.13	7.70	5.18	—	0.50	1.21	0.62	0°
	Nom.	1.95	0.15	1.80	0.41	0.20	5.23	7.90	5.28	1.27	0.65	1.31	0.74	5°
	Max.	2.16	0.20	1.91	0.51	0.25	5.33	8.10	5.38	—	0.80	1.41	0.88	8°
Inch	Min.	0.069	0.002	0.067	0.014	0.007	0.202	0.303	0.204	—	0.020	0.048	0.024	0°
	Nom.	0.077	0.006	0.071	0.016	0.008	0.206	0.311	0.208	0.050	0.026	0.052	0.029	5°
	Max.	0.085	0.008	0.075	0.020	0.010	0.210	0.319	0.212	—	0.031	0.056	0.035	8°

Dwg. No.	Revision	Reference			
		JEDEC	EIAJ		
6110-1406	5				

Doc. Title: Package Outline for WSON 8L (8x6x0.8MM, LEAD PITCH 1.27MM)

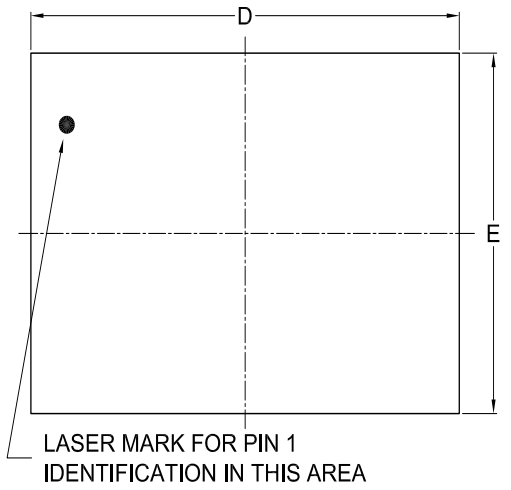

TOP VIEW

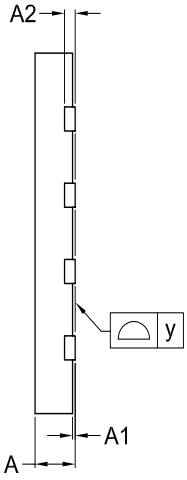

SIDE VIEW

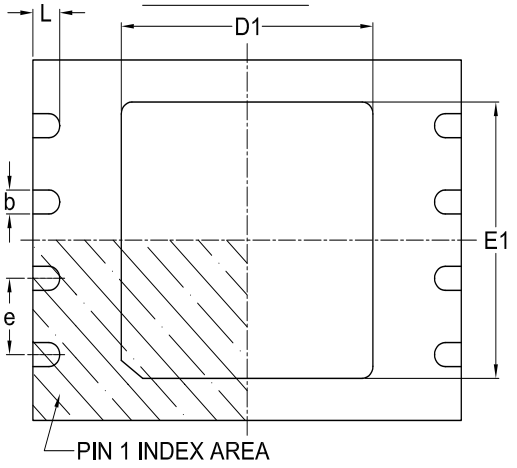

BOTTOM VIEW

Note:

This package has an exposed metal pad underneath the package. It is recommended to leave the metal pad floating or to connect it to the same ground as the GND pin of the package. Do not connect the metal pad to any other voltage or signal line on the PCB. Avoid placing vias or traces underneath the metal pad. Connection of this metal pad to any other voltage or signal line can result in shorts and/or electrical malfunction of the device.

Dimensions (inch dimensions are derived from the original mm dimensions)

SYMBOL / UNIT		A	A1	A2	b	D	D1	E	E1	L	e	y
mm	Min.	0.70	—	—	0.35	7.90	4.60	5.90	4.50	0.40	—	0.00
	Nom.	—	—	0.20	0.40	8.00	4.70	6.00	4.60	0.50	1.27	—
	Max.	0.80	0.05	—	0.48	8.10	4.80	6.10	4.70	0.60	—	0.08
Inch	Min.	0.028	—	—	0.014	0.311	0.181	0.232	0.177	0.016	—	0.00
	Nom.	—	—	0.008	0.016	0.315	0.185	0.236	0.181	0.020	0.05	—
	Max.	0.032	0.002	—	0.019	0.319	0.189	0.240	0.185	0.024	—	0.003

Dwg. No.	Revision	Reference			
		JEDEC	EIAJ		
6110-3402	8	MO-220			

20. REVISION HISTORY

Revision No.	Description	Page	Date
0.01	1. Added ODS information	P34,35	OCT/24/2014
	2. Corrected content error	All	
	3. Added SPBLKDN bit and modified SPBs descriptions.	P73-74	
	4. Updated SFDP parameters and descriptions.	P82-83,90-91	
	5. Updated Input and Output Capacitance.	P94	
	6. Updated DC/AC/VWI/tVSL parameters and notes.	P35,96-98,101-102	
	7. Modified command table for 4READ, RDLR, WRLR.	P17,20,73	
0.02	1. Updated SFDP parameters and descriptions.	P84-88,90	NOV/27/2014
	2. Content modification.	P4	

Except for customized products which has been expressly identified in the applicable agreement, Macronix's products are designed, developed, and/or manufactured for ordinary business, industrial, personal, and/or household applications only, and not for use in any applications which may, directly or indirectly, cause death, personal injury, or severe property damages. In the event Macronix products are used in contradicted to their target usage above, the buyer shall take any and all actions to ensure said Macronix's product qualified for its actual use in accordance with the applicable laws and regulations; and Macronix as well as it's suppliers and/or distributors shall be released from any and all liability arisen therefrom.

Copyright© Macronix International Co., Ltd. 2014. All rights reserved, including the trademarks and tradename thereof, such as Macronix, MXIC, MXIC Logo, MX Logo, Integrated Solutions Provider, NBit, Nbit, NBiit, Macronix NBit, eLiteFlash, HybridNVM, HybridFlash, XtraROM, Phines, KH Logo, BE-SONOS, KSMC, Kingtech, MXSMIO, Macronix vEE, Macronix MAP, Rich Audio, Rich Book, Rich TV, and FitCAM. The names and brands of third party referred thereto (if any) are for identification purposes only.

For the contact and order information, please visit Macronix's Web site at: http://www.macronix.com