MX25L12835F

DATASHEET

Contents

1. FEATURES 4
2. GENERAL DESCRIPTION 6
Table 1. Read performance Comparison 6
3. PIN CONFIGURATIONS 7
4. PIN DESCRIPTION 7
5. BLOCK DIAGRAM 8
6. DATA PROTECTION 9
Table 2. Protected Area Sizes 10
Table 3. 4K-bit Secured OTP Definition 11
7. Memory Organization 12
Table 4. Memory Organization 12
8. DEVICE OPERATION 13
8-1. Quad Peripheral Interface (QPI) Read Mode 15
9. COMMAND DESCRIPTION 16
Table 5. Command Set 16
9-1. Write Enable (WREN) 20
9-2. Write Disable (WRDI) 21
9-3. Read Identification (RDID) 22
9-4. Release from Deep Power-down (RDP), Read Electronic Signature (RES) 23
9-5. Read Electronic Manufacturer ID & Device ID (REMS) 25
9-6. QPI ID Read (QPIID) 26
Table 6. ID Definitions 26
9-7. Read Status Register (RDSR) 27
9-8. Read Configuration Register (RDCR) 28
Table 7. Configuration Register Table 32
9-9. Write Status Register (WRSR) 34
Table 8. Protection Modes 35
9-10. Read Data Bytes (READ) 38
9-11. Read Data Bytes at Higher Speed (FAST_READ) 39
9-12. Dual Output Read Mode (DREAD) 40
9-13. 2 x I/O Read Mode (2READ) 41
9-14. Quad Read Mode (QREAD) 42
9-15. 4 x I/O Read Mode (4READ) 43
9-16. Burst Read 45
9-17. Performance Enhance Mode 46
9-18. Performance Enhance Mode Reset 49
9-19. Fast Boot 50
9-20. Sector Erase (SE) 53
9-21. Block Erase (BE32K) 54
9-22. Block Erase (BE) 55
9-23. Chip Erase (CE) 56
9-24. Page Program (PP) 57
9-25. 4 x I/O Page Program (4PP) 59

9-26. Deep Power-down (DP) 60
9-27. Enter Secured OTP (ENSO) 61
9-28. Exit Secured OTP (EXSO) 61
9-29. Read Security Register (RDSCUR) 61
9-30. Write Security Register (WRSCUR) 61
Table 9. Security Register Definition 62
9-31. Write Protection Selection (WPSEL) 63
9-32. Advanced Sector Protection 65
9-33. Password Protection Mode 72
9-34. Program/Erase Suspend/Resume 74
9-35. Erase Suspend 74
9-36. Program Suspend 74
9-37. Write-Resume 76
9-38. No Operation (NOP) 76
9-39. Software Reset (Reset-Enable (RSTEN) and Reset (RST)) 76
9-40. Read SFDP Mode (RDSFDP) 78
Table 10. Signature and Parameter Identification Data Values 79
Table 11. Parameter Table (0): JEDEC Flash Parameter Tables 80
Table 12. Parameter Table (1): Macronix Flash Parameter Tables 82
10. RESET 84
Table 13. Reset Timing-(Power On) 84
Table 14. Reset Timing-(Other Operation) 84
11. POWER-ON STATE 85
12. ELECTRICAL SPECIFICATIONS 86
Table 15. ABSOLUTE MAXIMUM RATINGS 86
Table 16. CAPACITANCE TA = 25°C, f = 1.0 MHz 86
Table 17. DC CHARACTERISTICS 88
Table 18. AC CHARACTERISTICS 89
13. OPERATING CONDITIONS 91
Table 19. Power-Up/Down Voltage and Timing 93
13-1. INITIAL DELIVERY STATE 93
14. ERASE AND PROGRAMMING PERFORMANCE 94
15. DATA RETENTION 94
16. LATCH-UP CHARACTERISTICS 94
17. ORDERING INFORMATION 95
18. PART NAME DESCRIPTION 96
19. PACKAGE INFORMATION 97
20. REVISION HISTORY 101

**3V 128M-BIT [x 1/x 2/x 4] CMOS MXSMIO® (SERIAL MULTI I/O)
FLASH MEMORY**

1. FEATURES

GENERAL

- Supports Serial Peripheral Interface -- Mode 0 and Mode 3
- Single Power Supply Operation
  - 2.7 to 3.6 volt for read, erase, and program operations
- 128Mb: 134,217,728 x 1 bit structure or 67,108,864 x 2 bits (two I/O mode) structure or 33,554,432 x 4 bits (four I/O mode) structure
- Protocol Support
  - Single I/O, Dual I/O and Quad I/O
- Latch-up protected to 100mA from -1V to Vcc +1V
- Low Vcc write inhibit is from 2.3V to 2.5V
- Fast read for SPI mode
  - Support clock frequency up to 133MHz for all protocols
  - Support Fast Read, 2READ, DREAD, 4READ, QREAD instructions.
  - Configurable dummy cycle number for fast read operation
- Quad Peripheral Interface (QPI) available
- Equal Sectors with 4K byte each, or Equal Blocks with 32K byte each or Equal Blocks with 64K byte each
  - Any Block can be erased individually
- Programming :
  - 256byte page buffer
  - Quad Input/Output page program(4PP) to enhance program performance
- Typical 100,000 erase/program cycles
- 20 years data retention

SOFTWARE FEATURES

- Input Data Format
  - 1-byte Command code
- Advanced Security Features
  - Block lock protection
  The BP0-BP3 and T/B status bit defines the size of the area to be protection against program and erase instructions
  - Advanced sector protection function (Solid and Password Protect)
- Additional 4K bit security OTP
  - Features unique identifier
  - factory locked identifiable, and customer lockable
- Command Reset
- Program/Erase Suspend and Resume operation
- Electronic Identification
  - JEDEC 1-byte manufacturer ID and 2-byte device ID
  - RES command for 1-byte Device ID
  - REMS command for 1-byte manufacturer ID and 1-byte device ID
- Support Serial Flash Discoverable Parameters (SFDP) mode

HARDWARE FEATURES

- SCLK Input
  - Serial clock input

- SI/SIO0
  - Serial Data Input or Serial Data Input/Output for 2 x I/O read mode and 4 x I/O read mode
- SO/SIO1
  - Serial Data Output or Serial Data Input/Output for 2 x I/O read mode and 4 x I/O read mode
- WP#/SIO2
  - Hardware write protection or serial data Input/Output for 4 x I/O read mode
- RESET#/SIO3
  - Hardware Reset pin or Serial input & Output for 4 x I/O read mode
- PACKAGE
  -8-pin SOP (200mil)
  -16-pin SOP (300mil)
  -8-land WSON (6x5mm)
  -8-land WSON (8x6mm)
  - **All devices are RoHS Compliant and Halogen-free**

2. GENERAL DESCRIPTION

MX25L12835F is 128Mb bits serial Flash memory, which is configured as 16,777,216 x 8 internally. When it is in two or four I/O mode, the structure becomes 67,108,864 bits x 2 or 33,554,432 bits x 4. MX25L12835F feature a serial peripheral interface and software protocol allowing operation on a simple 3-wire bus while it is in single I/O mode. The three bus signals are a clock input (SCLK), a serial data input (SI), and a serial data output (SO). Serial access to the device is enabled by CS# input.

When it is in two I/O read mode, the SI pin and SO pin become SIO0 pin and SIO1 pin for address/dummy bits input and data output. When it is in four I/O read mode, the SI pin, SO pin, WP# and RESET# pin become SIO0 pin, SIO1 pin, SIO2 pin and SIO3 pin for address/dummy bits input and data output.

The MX25L12835F MXSMIO® (Serial Multi I/O) provides sequential read operation on whole chip.

After program/erase command is issued, auto program/erase algorithms which program/erase and verify the specified page or sector/block locations will be executed. Program command is executed on byte basis, or page (256 bytes) basis, or word basis for erase command is executed on sector (4K-byte), block (32K-byte), or block (64K-byte), or whole chip basis.

To provide user with ease of interface, a status register is included to indicate the status of the chip. The status read command can be issued to detect completion status of a program or erase operation via WIP bit.

Advanced security features enhance the protection and security functions, please see security features section for more details.

When the device is not in operation and CS# is high, it is put in standby mode.

The MX25L12835F utilizes Macronix's proprietary memory cell, which reliably stores memory contents even after 100,000 program and erase cycles.

Table 1. Read performance Comparison

Numbers of Dummy Cycles	Fast Read (MHz)	Dual Output Fast Read (MHz)	Quad Output Fast Read (MHz)	Dual IO Fast Read (MHz)	Quad IO Fast Read (MHz)
4	-	-	-	84*	70
6	104	104	84	104	84*
8	104*	104*	104*	104	104
10	133	133	133	133	133

Note: * mean default status

3. PIN CONFIGURATIONS

8-PIN SOP (200mil)

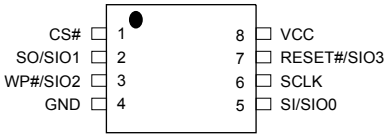

16-PIN SOP (300mil)

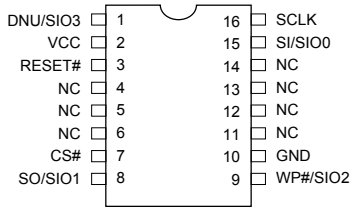

8-WSON (6x5mm, 8x6mm)

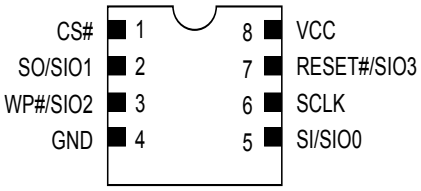

4. PIN DESCRIPTION

SYMBOL	DESCRIPTION
CS#	Chip Select
SI/SIO0	Serial Data Input (for 1 x I/O)/ Serial Data Input & Output (for 2xI/O or 4xI/O read mode)
SO/SIO1	Serial Data Output (for 1 x I/O)/ Serial Data Input & Output (for 2xI/O or 4xI/O read mode)
SCLK	Clock Input
WP#/SIO2	Write protection Active low or Serial Data Input & Output (for 4xI/O read mode)
RESET#/SIO3	Hardware Reset Pin Active low or Serial Data Input & Output (for 4xI/O read mode)
VCC	+ 3V Power Supply
GND	Ground
NC	No Connection
DNU	Do not use

Notes:
1. RESET# pin has internal pull up.
2. When using 1I/O or 2I/O (QE bit not enable), the DNU/SIO3 pin of 16SOP can not connect to GND. Recommend to connect this pin to VCC or floating.

5. BLOCK DIAGRAM

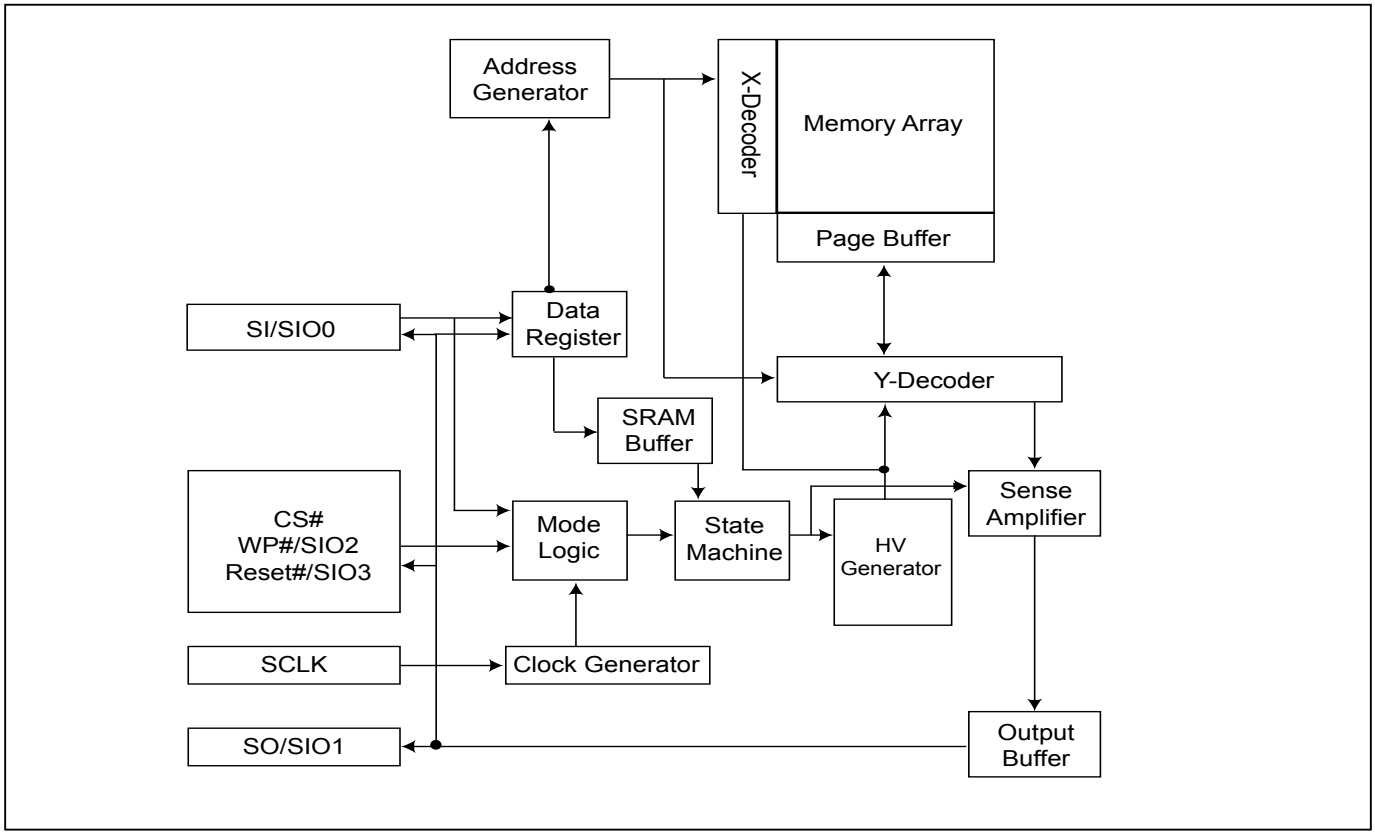

6. DATA PROTECTION

During power transition, there may be some false system level signals which result in inadvertent erasure or programming. The device is designed to protect itself from these accidental write cycles.

The state machine will be reset as standby mode automatically during power up. In addition, the control register architecture of the device constrains that the memory contents can only be changed after specific command sequences have completed successfully.

In the following, there are several features to protect the system from the accidental write cycles during VCC power-up and power-down or from system noise.

- Valid command length checking: The command length will be checked whether it is at byte base and completed on byte boundary.
- Write Enable (WREN) command: WREN command is required to set the Write Enable Latch bit (WEL) before other command to change data.
- Deep Power Down Mode: By entering deep power down mode, the flash device also is under protected from writing all commands except Release from deep power down mode command (RDP) and Read Electronic Signature command (RES), and softreset command.
- Advanced Security Features: there are some protection and security features which protect content from inadvertent write and hostile access.

I. Block lock protection

- The Software Protected Mode (SPM) use (BP3, BP2, BP1, BP0 and T/B) bits to allow part of memory to be protected as read only. The protected area definition is shown as *Table 2. Protected Area Sizes*, the protected areas are more flexible which may protect various area by setting value of BP0-BP3 bits.
- The Hardware Proteced Mode (HPM) use WP#/SIO2 to protect the (BP3, BP2, BP1, BP0) bits and Status Register Write Protect bit.
- In four I/O and QPI mode, the feature of HPM will be disabled.

Table 2. Protected Area Sizes

Protected Area Sizes (T/B bit = 0)

Status bit				Protect Level
BP3	BP2	BP1	BP0	128Mb
0	0	0	0	0 (none)
0	0	0	1	1 (1 block, protected block 255th)
0	0	1	0	2 (2 blocks, block 254th-255th)
0	0	1	1	3 (4 blocks, block 252nd-255th)
0	1	0	0	4 (8 blocks, block 248th-255th)
0	1	0	1	5 (16 blocks, block 240th-255th)
0	1	1	0	6 (32 blocks, block 224th-255th)
0	1	1	1	7 (64 blocks, block 192nd-255th)
1	0	0	0	8 (128 blocks, block 128th-255th)
1	0	0	1	9 (256 blocks, protected all)
1	0	1	0	10 (256 blocks, protected all)
1	0	1	1	11 (256 blocks, protected all)
1	1	0	0	12 (256 blocks, protected all)
1	1	0	1	13 (256 blocks, protected all)
1	1	1	0	14 (256 blocks, protected all)
1	1	1	1	15 (256 blocks, protected all)

Protected Area Sizes (T/B bit = 1)

Status bit				Protect Level
BP3	BP2	BP1	BP0	128Mb
0	0	0	0	0 (none)
0	0	0	1	1 (1 block, protected block 0th)
0	0	1	0	2 (2 blocks, protected block 0th~1th)
0	0	1	1	3 (4 blocks, protected block 0th~3rd)
0	1	0	0	4 (8 blocks, protected block 0th~7th)
0	1	0	1	5 (16 blocks, protected block 0th~15th)
0	1	1	0	6 (32 blocks, protected block 0th~31st)
0	1	1	1	7 (64 blocks, protected block 0th~63rd)
1	0	0	0	8 (128 blocks, protected block 0th~127th)
1	0	0	1	9 (256 blocks, protected all)
1	0	1	0	10 (256 blocks, protected all)
1	0	1	1	11 (256 blocks, protected all)
1	1	0	0	12 (256 blocks, protected all)
1	1	0	1	13 (256 blocks, protected all)
1	1	1	0	14 (256 blocks, protected all)
1	1	1	1	15 (256 blocks, protected all)

II. Additional 4K-bit secured OTP for unique identifier: to provide 4K-bit one-time program area for setting device unique serial number - Which may be set by factory or system customer.

- Security register bit 0 indicates whether the chip is locked by factory or not.

- To program the 4K-bit secured OTP by entering 4K-bit secured OTP mode (with Enter Security OTP command), and going through normal program procedure, and then exiting 4K-bit secured OTP mode by writing Exit Security OTP command.

- Customer may lock-down the customer lockable secured OTP by writing WRSCUR(write security register) command to set customer lock-down bit1 as "1". Please refer to *Table 9. Security Register Definition* for security register bit definition and *Table 3. 4K-bit Secured OTP Definition* for address range definition.

- Note: Once lock-down whatever by factory or customer, it cannot be changed any more. While in 4K-bit secured OTP mode, array access is not allowed.

Table 3. 4K-bit Secured OTP Definition

Address range	Size	Standard Factory Lock	Customer Lock
xxx000~xxx00F	128-bit	ESN (electrical serial number)	Determined by customer
xxx010~xxx1FF	3968-bit	N/A	

7. Memory Organization

Table 4. Memory Organization

Block(64K-byte)	Block(32K-byte)	Sector	Address Range	
255	511	4095	FFF000h	FFFFFFh
		⋮		
		4088	FF8000h	FF8FFFh
	510	4087	FF7000h	FF7FFFh
		⋮		
		4080	FF0000h	FF0FFFh
254	509	4079	FEF000h	FEFFFFh
		⋮		
		4072	FE8000h	FE8FFFh
	508	4071	FE7000h	FE7FFFh
		⋮		
		4064	FE0000h	FE0FFFh
253	507	4063	FDF000h	FDFFFFh
		⋮		
		4056	FD8000h	FD8FFFh
	506	4055	FD7000h	FD7FFFh
		⋮		
		4048	FD0000h	FD0FFFh
2	5	47	02F000h	02FFFFh
		⋮		
		40	028000h	028FFFh
	4	39	027000h	027FFFh
		⋮		
		32	020000h	020FFFh
1	3	31	01F000h	01FFFFh
		⋮		
		24	018000h	018FFFh
	2	23	017000h	017FFFh
		⋮		
		16	010000h	010FFFh
0	1	15	00F000h	00FFFFh
		⋮		
		8	008000h	008FFFh
	0	7	007000h	007FFFh
		⋮		
		0	000000h	000FFFh

individual block lock/unlock unit:64K-byte

individual 16 sectors lock/unlock unit:4K-byte

individual block lock/unlock unit:64K-byte

individual block lock/unlock unit:64K-byte

individual 16 sectors lock/unlock unit:4K-byte

8. DEVICE OPERATION

1. Before a command is issued, status register should be checked to ensure device is ready for the intended operation.

2. When incorrect command is inputted to this device, this device becomes standby mode and keeps the standby mode until next CS# falling edge. In standby mode, SO pin of this device should be High-Z.

3. When correct command is inputted to this device, this device becomes active mode and keeps the active mode until next CS# rising edge.

4. Input data is latched on the rising edge of Serial Clock (SCLK) and data shifts out on the falling edge of SCLK. The difference of Serial mode 0 and mode 3 is shown as "Serial Modes Supported".

5. For the following instructions: RDID, RDSR, RDSCUR, READ, FAST_READ, 2READ, DREAD, 4READ, QREAD, RDSFDP, RES, REMS, QPIID, RDDPB, RDSPB, RDPASS, RDLR, RDFBR, RDSPBLK, RDCR the shifted-in instruction sequence is followed by a data-out sequence. After any bit of data being shifted out, the CS# can be high. For the following instructions: WREN, WRDI, WRSR, SE, BE32K, BE, CE, PP, 4PP, DP, ENSO, EXSO, WRSCUR, WPSEL, GBLK, GBULK, SPBLK, SUSPEND, RESUME, NOP, RSTEN, RST, EQIO, RSTQIO the CS# must go high exactly at the byte boundary; otherwise, the instruction will be rejected and not executed.

6. During the progress of Write Status Register, Program, Erase operation, to access the memory array is neglected and not affect the current operation of Write Status Register, Program, Erase.

Figure 1. Serial Modes Supported

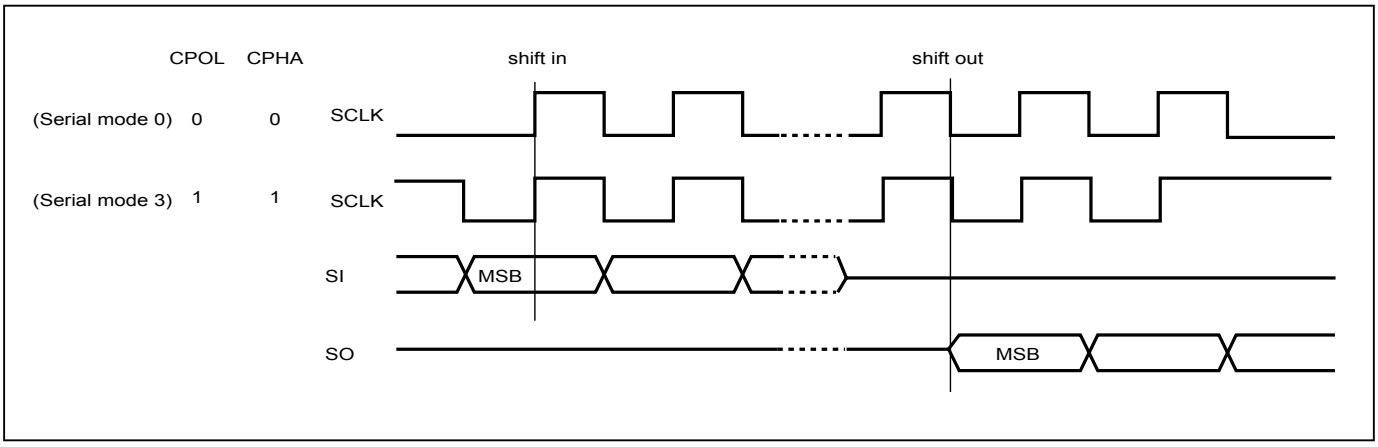

Note:
CPOL indicates clock polarity of Serial master, CPOL=1 for SCLK high while idle, CPOL=0 for SCLK low while not transmitting. CPHA indicates clock phase. The combination of CPOL bit and CPHA bit decides which Serial mode is supported.

Figure 2. Serial Input Timing

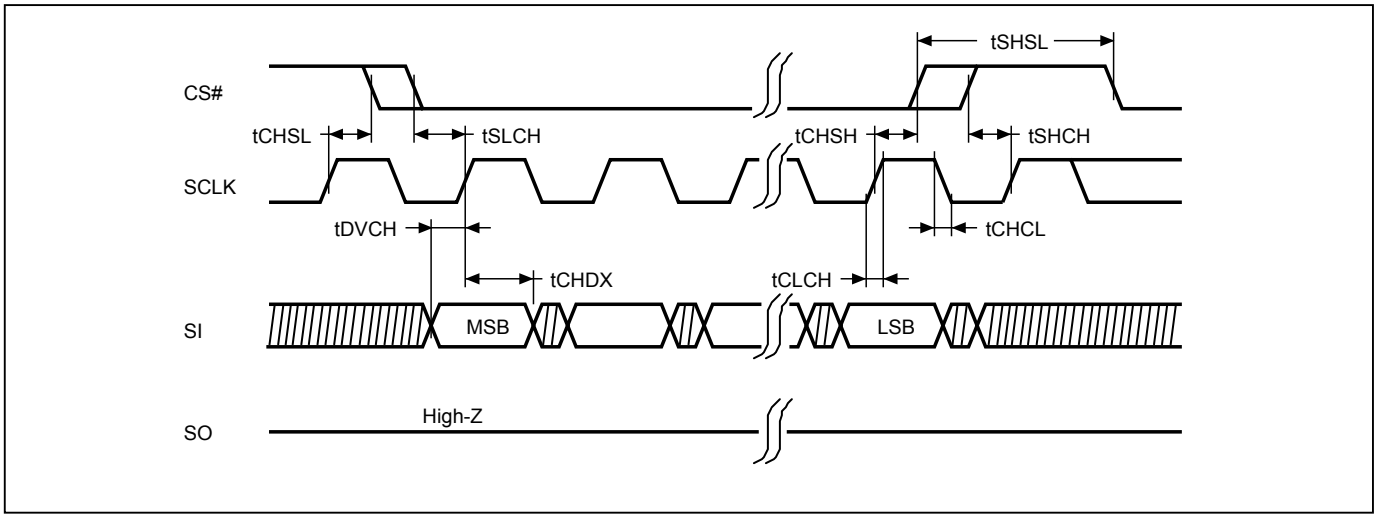

Figure 3. Output Timing

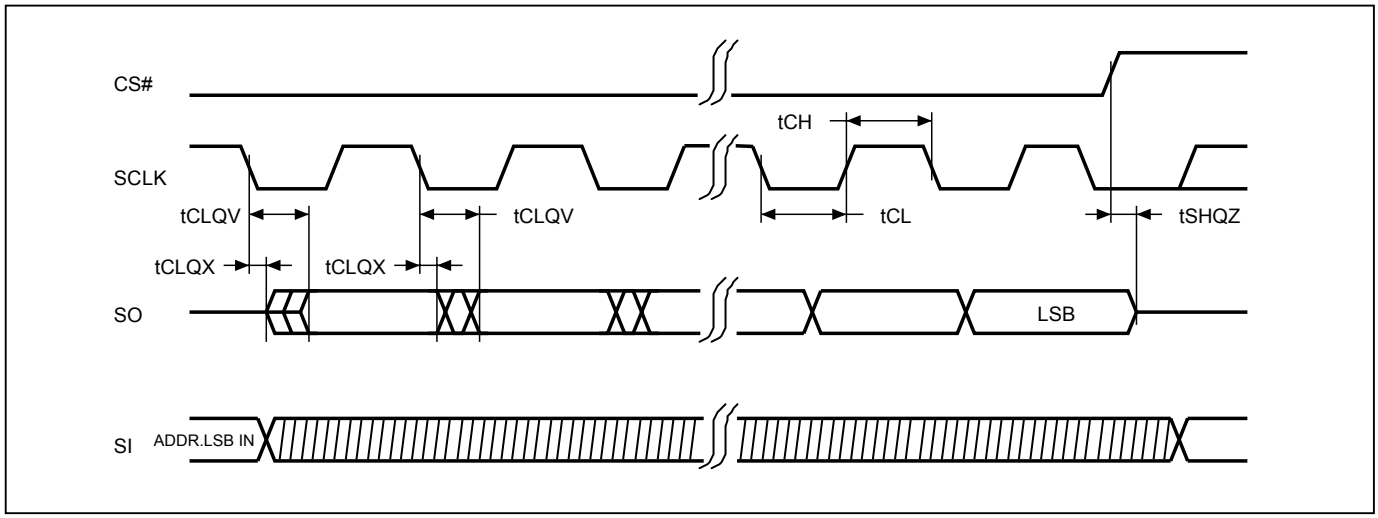

8-1. Quad Peripheral Interface (QPI) Read Mode

QPI protocol enables user to take full advantage of Quad I/O Serial Flash by providing the Quad I/O interface in command cycles, address cycles and as well as data output cycles.

Enable QPI mode

By issuing 35H command, the QPI mode is enable. After QPI mode enable, the device enter quad mode (4-4-4) without QE bit status changed.

Figure 4. Enable QPI Sequence

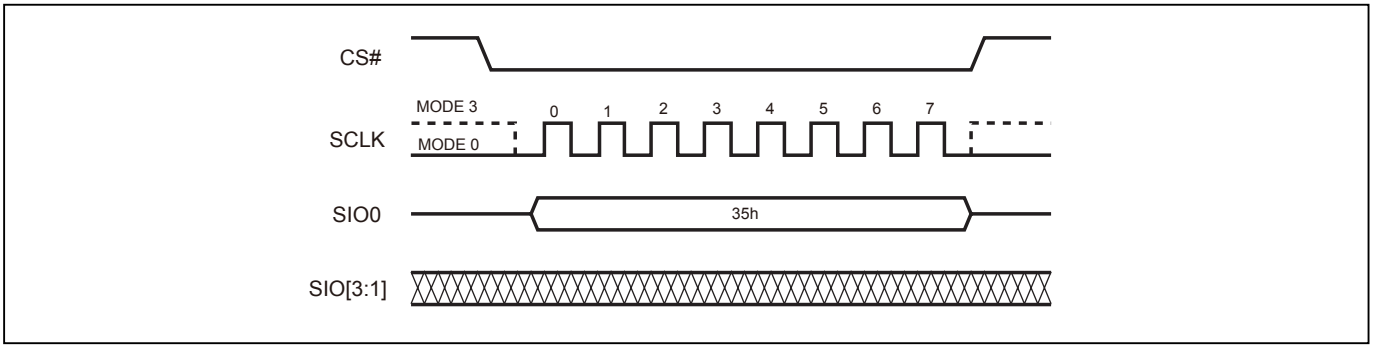

Reset QPI (RSTQIO)

To reset the QPI mode, the RSTQIO (F5H) command is required. After the RSTQIO command is issued, the device returns from QPI mode (4 I/O interface in command cycles) to SPI mode (1 I/O interface in command cycles).

Note:
For EQIO and RSTQIO commands, CS# high width has to follow "write spec" tSHSL for next instruction.

Figure 5. Reset QPI Mode

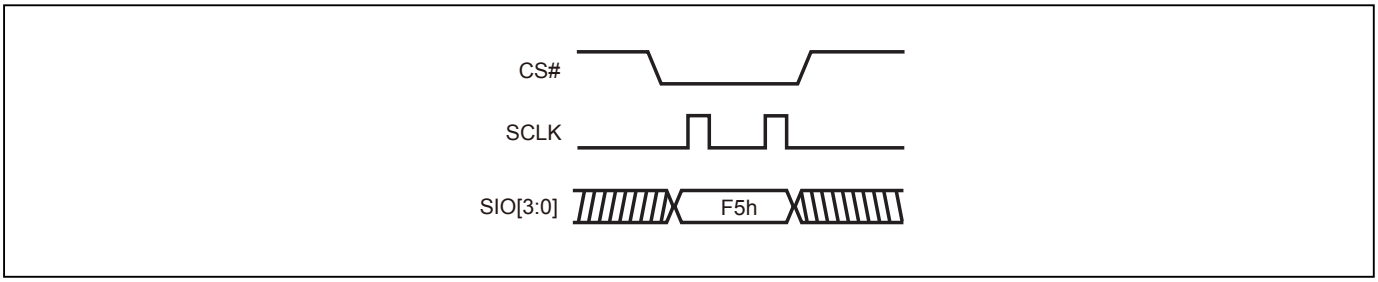

9. COMMAND DESCRIPTION

Table 5. Command Set

Read/Write Array Commands

Command (byte)	READ (normal read)	FAST READ (fast read data)	2READ (2 x I/O read command)	DREAD (1I 2O read)	4READ (4 I/O read)	QREAD (1I 4O read)
Mode	SPI	SPI	SPI	SPI	SPI/QPI	SPI
Address Bytes	3	3	3	3	3	3
1st byte	03 (hex)	0B (hex)	BB (hex)	3B (hex)	EB (hex)	6B (hex)
2nd byte	ADD1	ADD1	ADD1	ADD1	ADD1	ADD1
3rd byte	ADD2	ADD2	ADD2	ADD2	ADD2	ADD2
4th byte	ADD3	ADD3	ADD3	ADD3	ADD3	ADD3
5th byte		Dummy*	Dummy*	Dummy*	Dummy*	Dummy*
Data Cycles						
Action	n bytes read out until CS# goes high	n bytes read out until CS# goes high	n bytes read out by 2 x I/O until CS# goes high	n bytes read out by Dual output until CS# goes high	n bytes read out by 4 x I/O until CS# goes high	n bytes read out by Quad output until CS# goes high

Command (byte)	PP (page program)	4PP (quad page program)	SE (sector erase)	BE 32K (block erase 32KB)	BE (block erase 64KB)	CE (chip erase)
Mode	SPI/QPI	SPI	SPI/QPI	SPI/QPI	SPI/QPI	SPI/QPI
Address Bytes	3	3	3	3	3	0
1st byte	02 (hex)	38 (hex)	20 (hex)	52 (hex)	D8 (hex)	60 or C7 (hex)
2nd byte		ADD1	ADD1	ADD1	ADD1	
3rd byte		ADD2	ADD2	ADD2	ADD2	
4th byte		ADD3	ADD3	ADD3	ADD3	
5th byte						
Data Cycles	1-256	1-256				
Action	to program the selected page	quad input to program the selected page	to erase the selected sector	to erase the selected 32K block	to erase the selected block	to erase whole chip

* Dummy cycle numbers will be different depending on the bit6 & bit 7 (DC0 & DC1) setting in configuration register.

Register/Setting Commands

Command (byte)	WREN (write enable)	WRDI (write disable)	RDSR (read status register)	RDCR (read configuration register)	WRSR (write status/ configuration register)	WPSEL (Write Protect Selection)	EQIO (Enable QPI)
Mode	SPI/QPI	SPI/QPI	SPI/QPI	SPI/QPI	SPI/QPI	SPI/QPI	SPI
1st byte	06 (hex)	04 (hex)	05 (hex)	15 (hex)	01 (hex)	68 (hex)	35 (hex)
2nd byte					Values		
3rd byte					Values		
4th byte							
5th byte							
Data Cycles					1-2		
Action	sets the (WEL) write enable latch bit	resets the (WEL) write enable latch bit	to read out the values of the status register	to read out the values of the configuration register	to write new values of the status/ configuration register	to enter and enable individal block protect mode	Entering the QPI mode

Command (byte)	RSTQIO (Reset QPI)	PGM/ERS Suspend (Suspends Program/ Erase)	PGM/ERS Resume (Resumes Program/ Erase)	DP (Deep power down)	RDP (Release from deep power down)	SBL (Set Burst Length)	RDFBR (read fast boot register)
Mode	QPI	SPI/QPI	SPI/QPI	SPI/QPI	SPI/QPI	SPI/QPI	SPI
1st byte	F5 (hex)	B0 (hex)	30 (hex)	B9 (hex)	AB (hex)	C0 (hex)	16(hex)
2nd byte							
3rd byte							
4th byte							
5th byte							
Data Cycles							1-4
Action	Exiting the QPI mode			enters deep power down mode	release from deep power down mode	to set Burst length	

Command (byte)	WRFBR (write fast boot register)	ESFBR (erase fast boot register)
Mode	SPI	SPI
1st byte	17(hex)	18(hex)
2nd byte		
3rd byte		
4th byte		
5th byte		
Data Cycles	4	
Action		

ID/Security Commands

Command (byte)	RDID (read identific-ation)	RES (read electronic ID)	REMS (read electronic manufacturer & device ID)	QPIID (QPI ID Read)	RDSFDP	ENSO (enter secured OTP)	EXSO (exit secured OTP)
Mode	SPI	SPI/QPI	SPI	QPI	SPI/QPI	SPI/QPI	SPI/QPI
Address Bytes	0	0	0	0	3	0	0
1st byte	9F (hex)	AB (hex)	90 (hex)	AF (hex)	5A (hex)	B1 (hex)	C1 (hex)
2nd byte		x	x		ADD1		
3rd byte		x	x		ADD2		
4th byte		x	ADD1 (Note 1)		ADD3		
5th byte					Dummy (8)		
Action	outputs JEDEC ID: 1-byte Manufacturer ID & 2-byte Device ID	to read out 1-byte Device ID	output the Manufacturer ID & Device ID	ID in QPI interface	Read SFDP mode	to enter the 4K-bit secured OTP mode	to exit the 4K-bit secured OTP mode

Command (byte)	RDSCUR (read security register)	WRSCUR (write security register)	GBLK (gang block lock)	GBULK (gang block unlock)	WRLR (write Lock register)	RDLR (read Lock register)	WRPASS (write password register)	RDPASS (read password register)
Mode	SPI/QPI	SPI/QPI	SPI/QPI	SPI/QPI	SPI	SPI	SPI	SPI
Address Bytes	0	0	0	0	0	0	0	0
1st byte	2B (hex)	2F (hex)	7E (hex)	98 (hex)	2C (hex)	2D (hex)	28 (hex)	27 (hex)
2nd byte								
3rd byte								
4th byte								
5th byte								
Data Cycles					2	2	1-8	1-8
Action	to read value of security register	to set the lock-down bit as "1" (once lock-down, cannot be updated)	whole chip write protect	whole chip unprotect				

Command (byte)	PASSULK (password unlock)	WRSPB (SPB bit program)	ESSPB (all SPB bit erase)	RDSPB (read SPB status)	SPBLK (SPB lock set)	RDSPBLK (SPB lock register read)	WRDPB (write DPB register)	RDDPB (read DPB register)
Mode	SPI	SPI	SPI	SPI	SPI	SPI	SPI	SPI
Address Bytes	0	4	0	4	0	0	4	4
1st byte	29 (hex)	E3 (hex)	E4 (hex)	E2 (hex)	A6 (hex)	A7 (hex)	E1 (hex)	E0 (hex)
2nd byte		ADD1		ADD1			ADD1	ADD1
3rd byte		ADD2		ADD2			ADD2	ADD2
4th byte		ADD3		ADD3			ADD3	ADD3
5th byte		ADD4		ADD4			ADD4	ADD4
Data Cycles	8			1		2	1	1
Action								

Reset Commands

Command (byte)	NOP (No Operation)	RSTEN (Reset Enable)	RST (Reset Memory)
Mode	SPI/QPI	SPI/QPI	SPI/QPI
1st byte	00 (hex)	66 (hex)	99 (hex)
2nd byte			
3rd byte			
4th byte			
5th byte			
Action			

Note 1: The count base is 4-bit for ADD(2) and Dummy(2) because of 2 x I/O. And the MSB is on SO/SIO1 which is different from 1 x I/O condition.
Note 2: ADD=00H will output the manufacturer ID first and AD=01H will output device ID first.
Note 3: It is not recommended to adopt any other code not in the command definition table, which will potentially enter the hidden mode.
Note 4: Before executing RST command, RSTEN command must be executed. If there is any other command to interfere, the reset operation will be disabled.
Note 5: The number in parentheses after "ADD" or "Data" stands for how many clock cycles it has. For example, "Data(8)" represents there are 8 clock cycles for the data in.

9-1. Write Enable (WREN)

The Write Enable (WREN) instruction is for setting Write Enable Latch (WEL) bit. For those instructions like PP, 4PP, SE, BE32K, BE, CE, and WRSR, which are intended to change the device content WEL bit should be set every time after the WREN instruction setting the WEL bit.

The sequence of issuing WREN instruction is: CS# goes low→sending WREN instruction code→ CS# goes high.

Both SPI (8 clocks) and QPI (2 clocks) command cycle can accept by this instruction. The SIO[3:1] are don't care in SPI mode.

Figure 6. Write Enable (WREN) Sequence (SPI Mode)

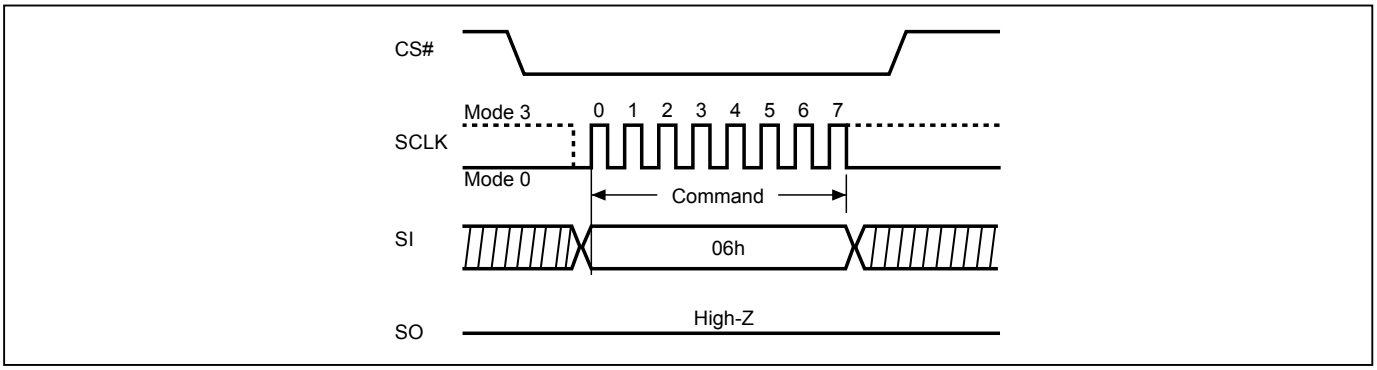

Figure 7. Write Enable (WREN) Sequence (QPI Mode)

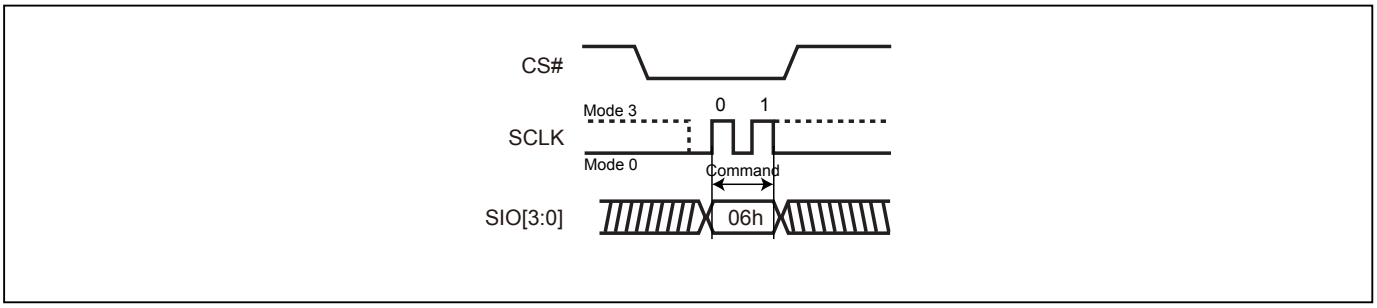

9-2. Write Disable (WRDI)

The Write Disable (WRDI) instruction is to reset Write Enable Latch (WEL) bit.

The sequence of issuing WRDI instruction is: CS# goes low→sending WRDI instruction code→CS# goes high.

Both SPI (8 clocks) and QPI (2 clocks) command cycle can accept by this instruction. The SIO[3:1] are don't care in SPI mode.

The WEL bit is reset by following situations:

- Power-up
- Reset# pin driven low
- WRDI command completion
- WRSR command completion
- PP command completion
- 4PP command completion
- SE command completion
- BE32K command completion
- BE command completion
- CE command completion
- PGM/ERS Suspend command completion
- Softreset command completion
- WRSCUR command completion
- WPSEL command completion
- GBLK command completion
- GBULK command completion
- WRLR command completion
- WRPASS command completion
- PASSULK command completion
- SPBLK command completion
- WRSPB command completion
- ESSPB command completion
- WRDPB command completion
- WRFBR command completion
- ESFBR command completion

Figure 8. Write Disable (WRDI) Sequence (SPI Mode)

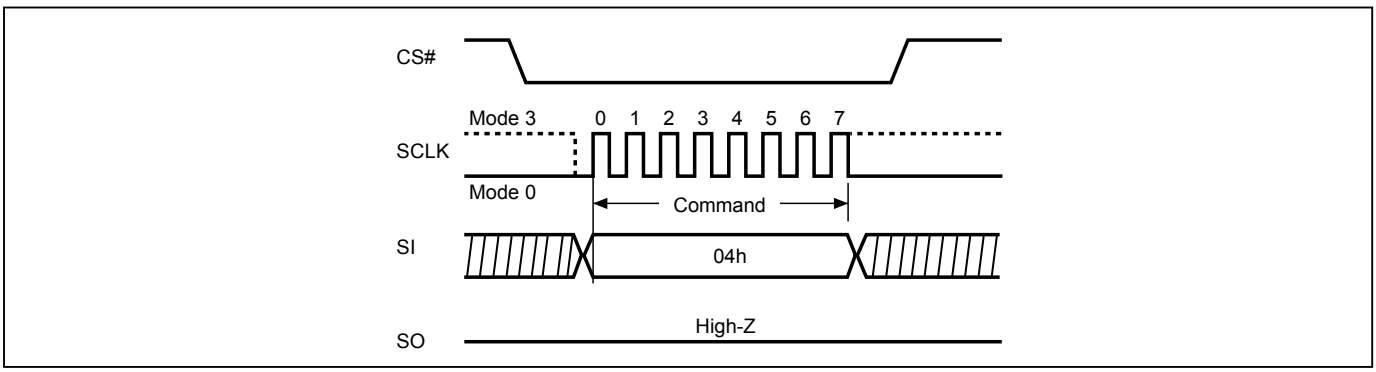

Figure 9. Write Disable (WRDI) Sequence (QPI Mode)

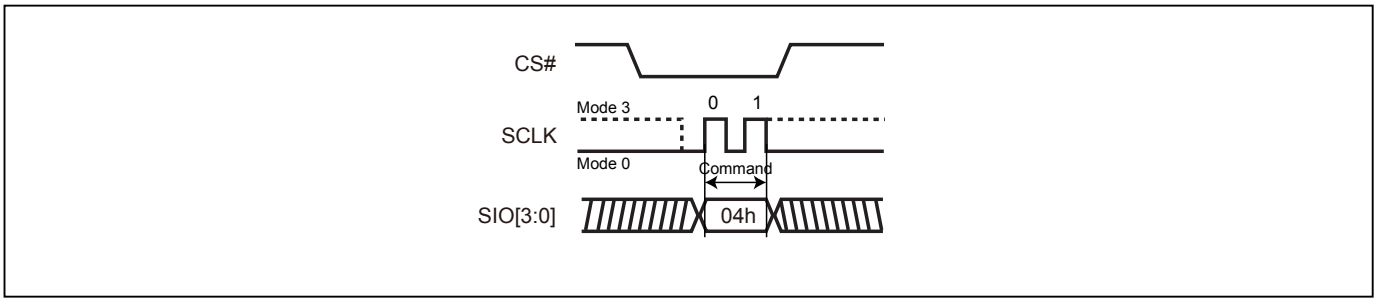

9-3. Read Identification (RDID)

The RDID instruction is for reading the manufacturer ID of 1-byte and followed by Device ID of 2-byte. The Macronix Manufacturer ID and Device ID are listed as *Table 6. ID Definitions*.

The sequence of issuing RDID instruction is: CS# goes low→ sending RDID instruction code→24-bits ID data out on SO→ to end RDID operation can drive CS# to high at any time during data out.

While Program/Erase operation is in progress, it will not decode the RDID instruction, therefore there's no effect on the cycle of program/erase operation which is currently in progress. When CS# goes high, the device is at standby stage.

Figure 10. Read Identification (RDID) Sequence (SPI mode only)

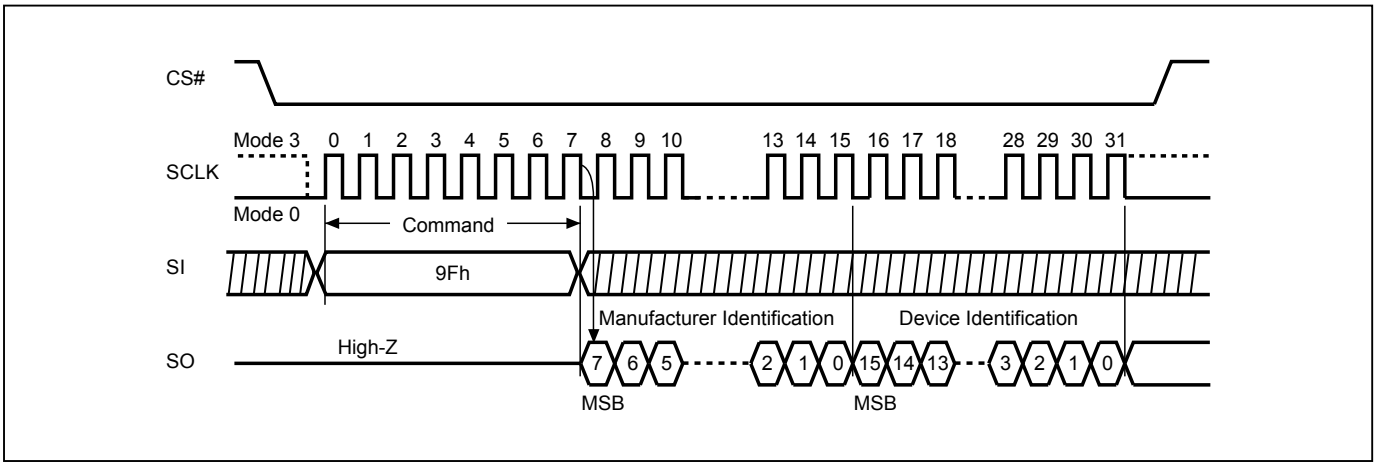

9-4. Release from Deep Power-down (RDP), Read Electronic Signature (RES)

The Release from Deep Power-down (RDP) instruction is completed by driving Chip Select (CS#) High. When Chip Select (CS#) is driven High, the device is put in the Stand-by Power mode. If the device was not previously in the Deep Power-down mode, the transition to the Stand-by Power mode is immediate. If the device was previously in the Deep Power-down mode, though, the transition to the Stand-by Power mode is delayed by tRES2, and Chip Select (CS#) must remain High for at least tRES2(max), as specified in *Table 18. AC CHARACTERISTICS*. Once in the Stand-by Power mode, the device waits to be selected, so that it can receive, decode and execute instructions. The RDP instruction is only for releasing from Deep Power Down Mode. Reset# pin goes low will release the Flash from deep power down mode.

RES instruction is for reading out the old style of 8-bit Electronic Signature, whose values are shown as *Table 6. ID Definitions*. This is not the same as RDID instruction. It is not recommended to use for new design. For new design, please use RDID instruction.

Even in Deep power-down mode, the RDP and RES are also allowed to be executed, only except the device is in progress of program/erase/write cycle; there's no effect on the current program/erase/write cycle in progress.

Both SPI (8 clocks) and QPI (2 clocks) command cycle can accept by this instruction. The SIO[3:1] are don't care when during SPI mode.

The RES instruction is ended by CS# goes high after the ID been read out at least once. The ID outputs repeatedly if continuously send the additional clock cycles on SCLK while CS# is at low. If the device was not previously in Deep Power-down mode, the device transition to standby mode is immediate. If the device was previously in Deep Power-down mode, there's a delay of tRES2 to transit to standby mode, and CS# must remain to high at least tRES2(max). Once in the standby mode, the device waits to be selected, so it can be receive, decode, and execute instruction.

Figure 11. Read Electronic Signature (RES) Sequence (SPI Mode)

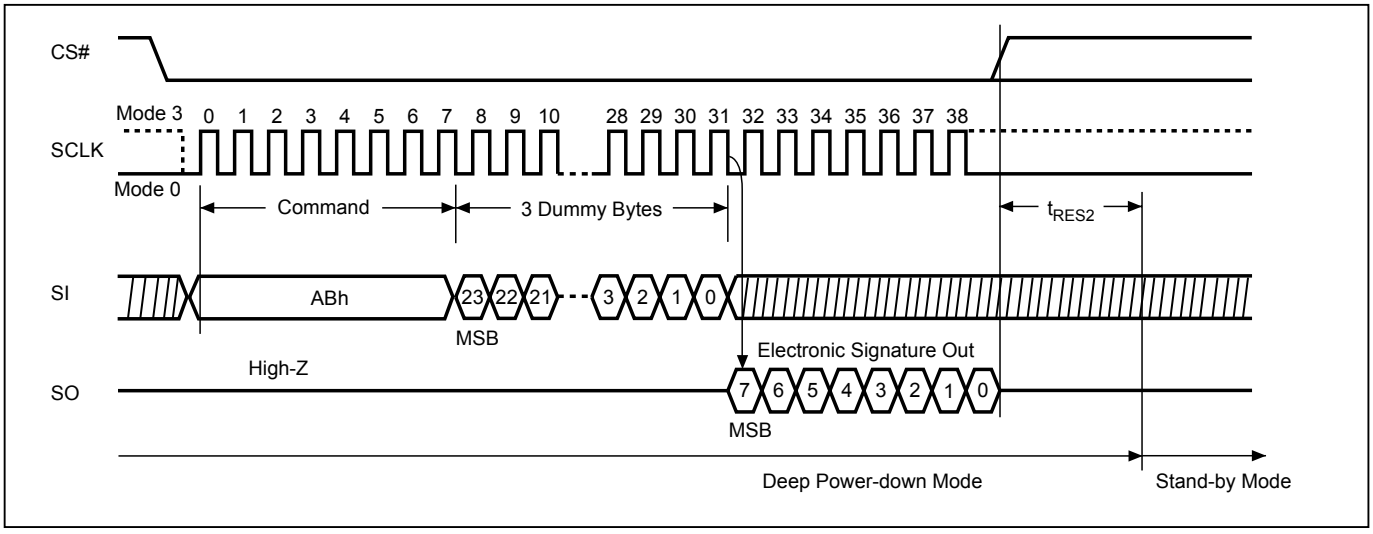

Figure 12. Read Electronic Signature (RES) Sequence (QPI Mode)

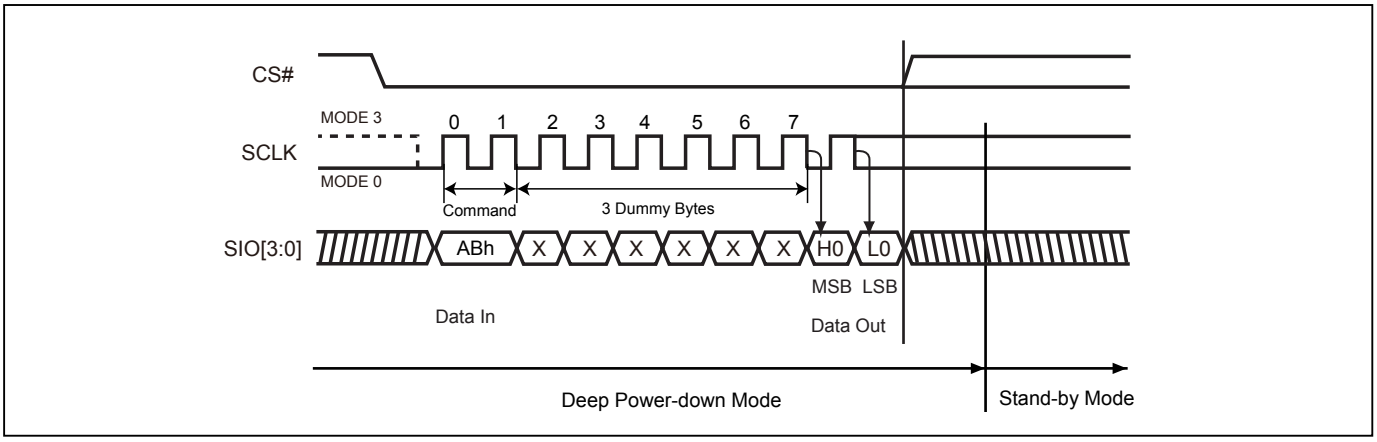

Figure 13. Release from Deep Power-down (RDP) Sequence (SPI Mode)

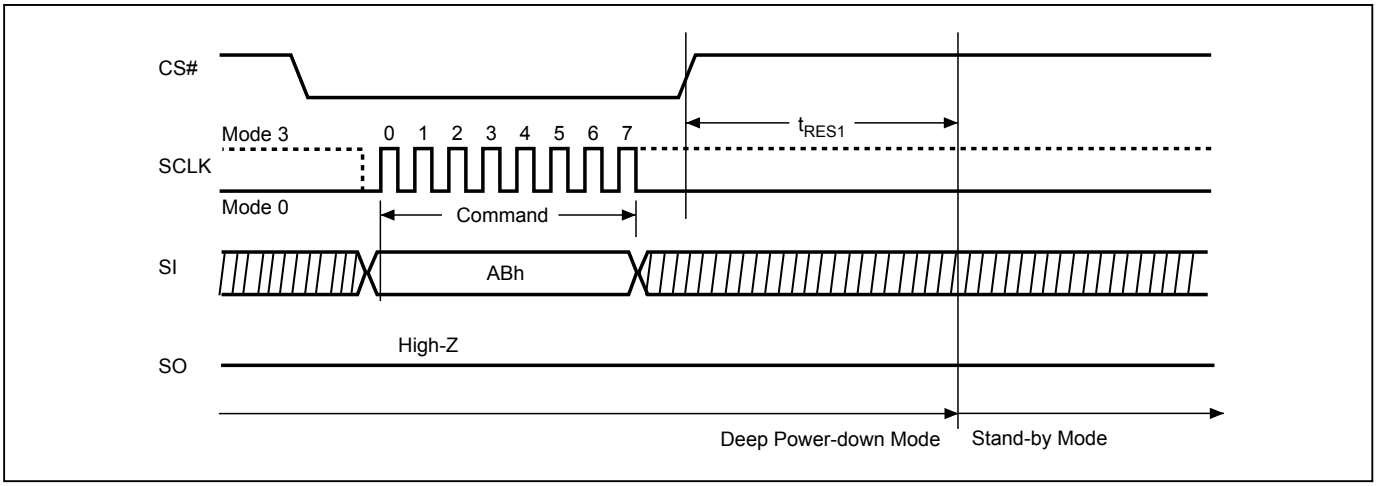

Figure 14. Release from Deep Power-down (RDP) Sequence (QPI Mode)

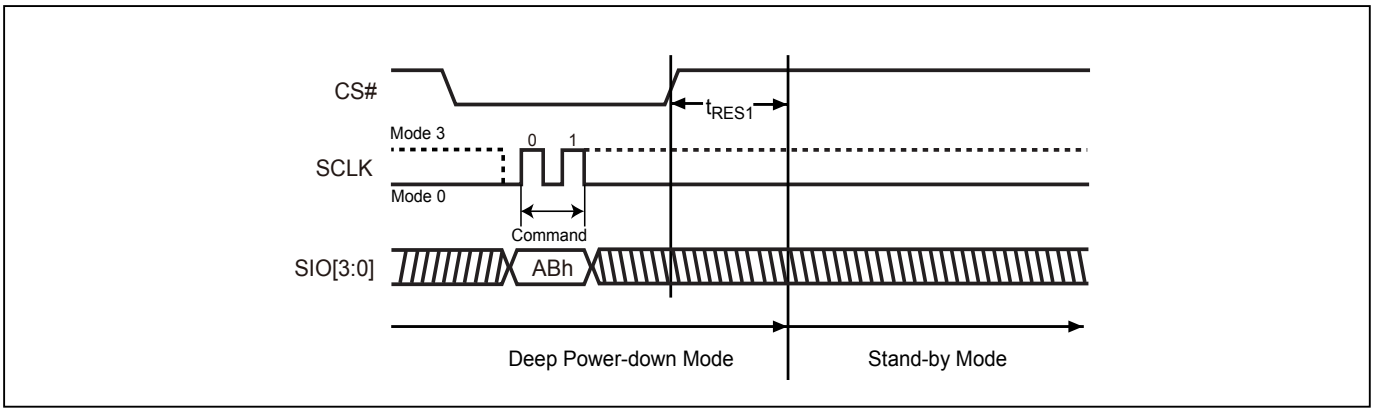

9-5. Read Electronic Manufacturer ID & Device ID (REMS)

The REMS instruction is an alternative to the Release from Power-down/Device ID instruction that provides both the JEDEC assigned manufacturer ID and the specific device ID.

The REMS instruction is very similar to the Release from Power-down/Device ID instruction. The instruction is initiated by driving the CS# pin low and shift the instruction code "90h" followed by two dummy bytes and one bytes address (A7~A0). After which, the Manufacturer ID for Macronix (C2h) and the Device ID are shifted out on the falling edge of SCLK with most significant bit (MSB) first. The Device ID values are listed in *Table 6. ID Definitions*. If the one-byte address is initially set to 01h, then the device ID will be read first and then followed by the Manufacturer ID. The Manufacturer and Device IDs can be read continuously, alternating from one to the other. The instruction is completed by driving CS# high.

Figure 15. Read Electronic Manufacturer & Device ID (REMS) Sequence (SPI Mode only)

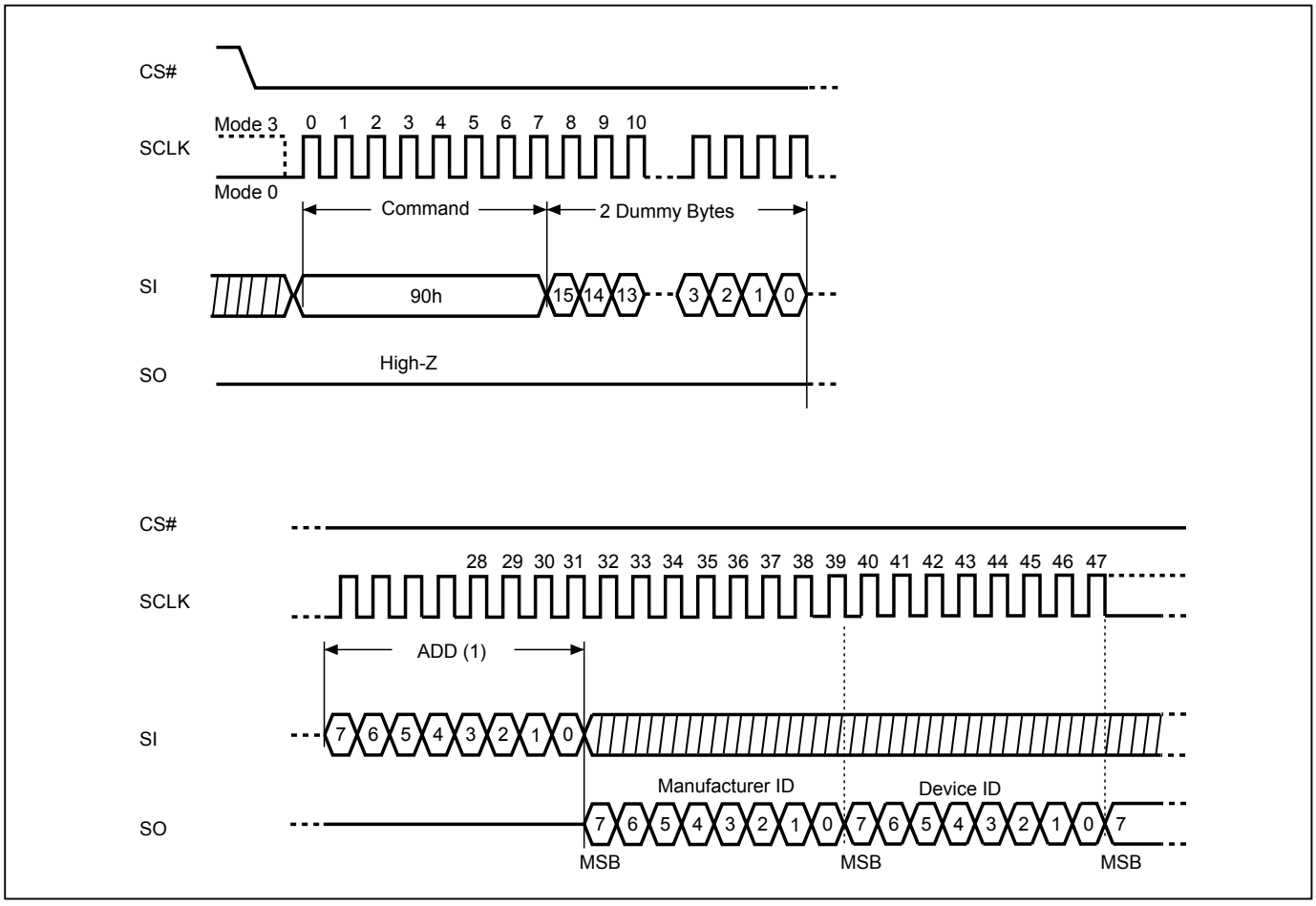

Notes:
(1) ADD=00H will output the manufacturer's ID first and ADD=01H will output device ID first.

9-6. QPI ID Read (QPIID)

User can execute this QPIID Read instruction to identify the Device ID and Manufacturer ID. The sequence of issue QPIID instruction is CS# goes low→sending QPI ID instruction→Data out on SO→CS# goes high. Most significant bit (MSB) first.

After the command cycle, the device will immediately output data on the falling edge of SCLK. The manufacturer ID, memory type, and device ID data byte will be output continuously, until the CS# goes high.

Table 6. ID Definitions

Command Type		MX25L12835F		
RDID	9Fh	Manufactory ID	Memory type	Memory density
		C2	20	18
RES	ABh	Electronic ID		
		17		
REMS	90h	Manufactory ID	Device ID	
		C2	17	
QPIID	AFh	Manufactory ID	Memory type	Memory density
		C2	20	18

9-7. Read Status Register (RDSR)

The RDSR instruction is for reading Status Register Bits. The Read Status Register can be read at any time (even in program/erase/write status register condition). It is recommended to check the Write in Progress (WIP) bit before sending a new instruction when a program, erase, or write status register operation is in progress.

The sequence of issuing RDSR instruction is: CS# goes low→ sending RDSR instruction code→ Status Register data out on SO.

Both SPI (8 clocks) and QPI (2 clocks) command cycle can accept by this instruction. The SIO[3:1] are don't care when during SPI mode.

Figure 16. Read Status Register (RDSR) Sequence (SPI Mode)

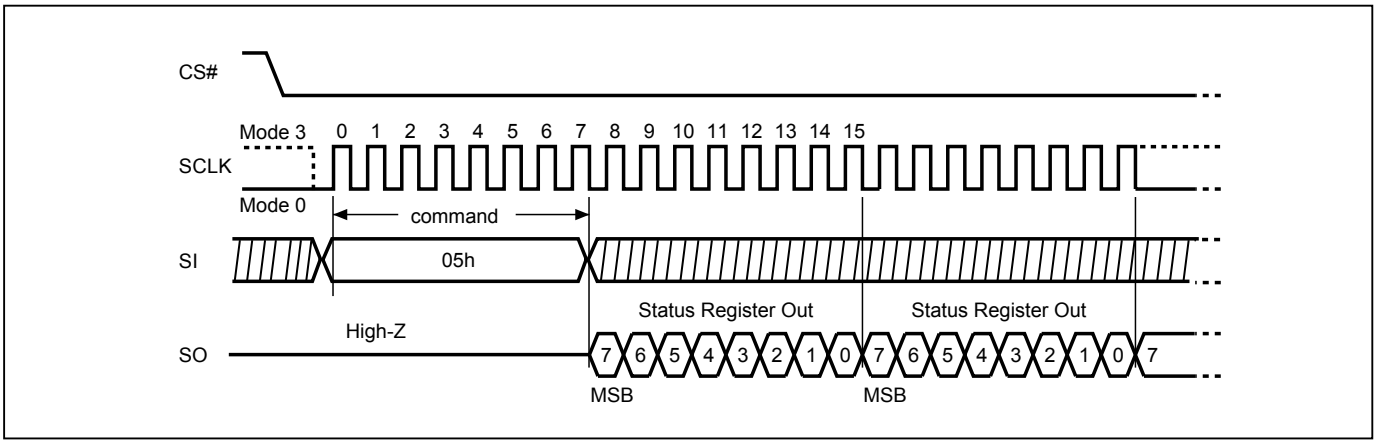

Figure 17. Read Status Register (RDSR) Sequence (QPI Mode)

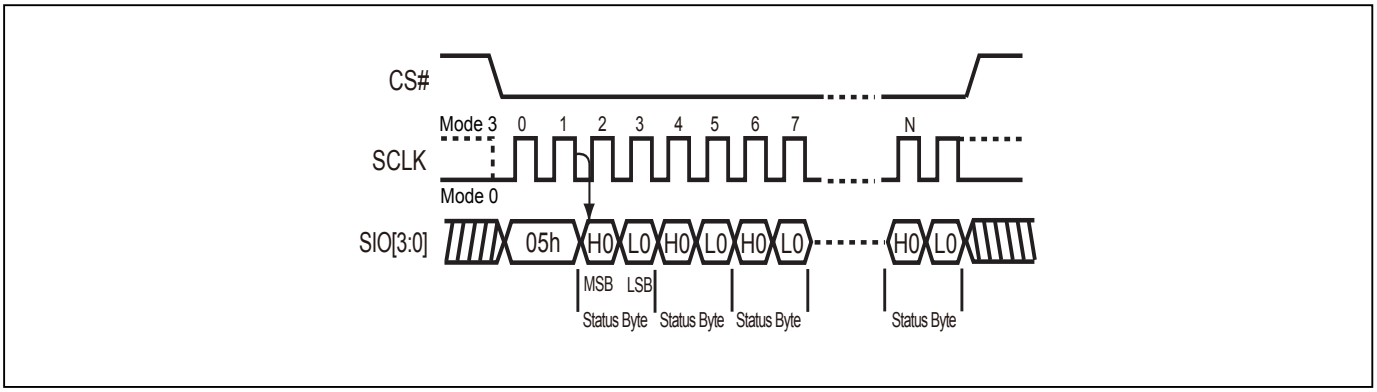

9-8. Read Configuration Register (RDCR)

The RDCR instruction is for reading Configuration Register Bits. The Read Configuration Register can be read at any time (even in program/erase/write configuration register condition). It is recommended to check the Write in Progress (WIP) bit before sending a new instruction when a program, erase, or write configuration register operation is in progress.

The sequence of issuing RDCR instruction is: CS# goes low→ sending RDCR instruction code→ Configuration Register data out on SO.

Both SPI (8 clocks) and QPI (2 clocks) command cycle can accept by this instruction. The SIO[3:1] are don't care when during SPI mode.

Figure 18. Read Configuration Register (RDCR) Sequence (SPI Mode)

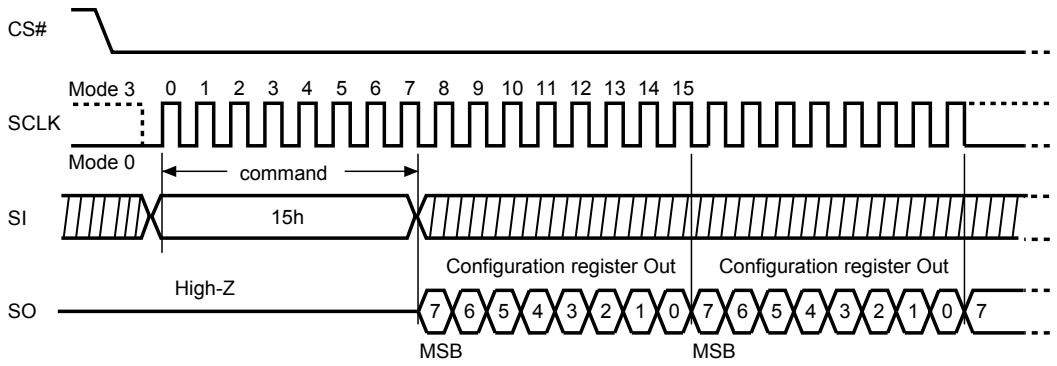

Figure 19. Read Configuration Register (RDCR) Sequence (QPI Mode)

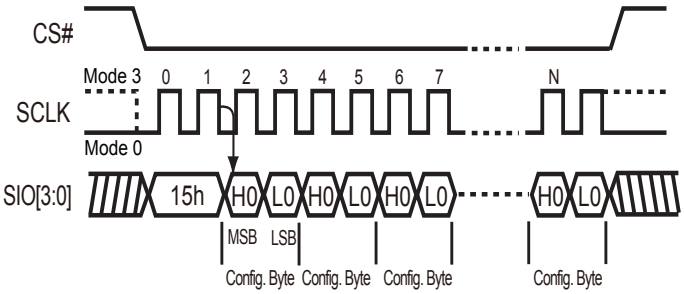

For user to check if Program/Erase operation is finished or not, RDSR instruction flow are shown as follows:

Figure 20. Program/Erase flow with read array data

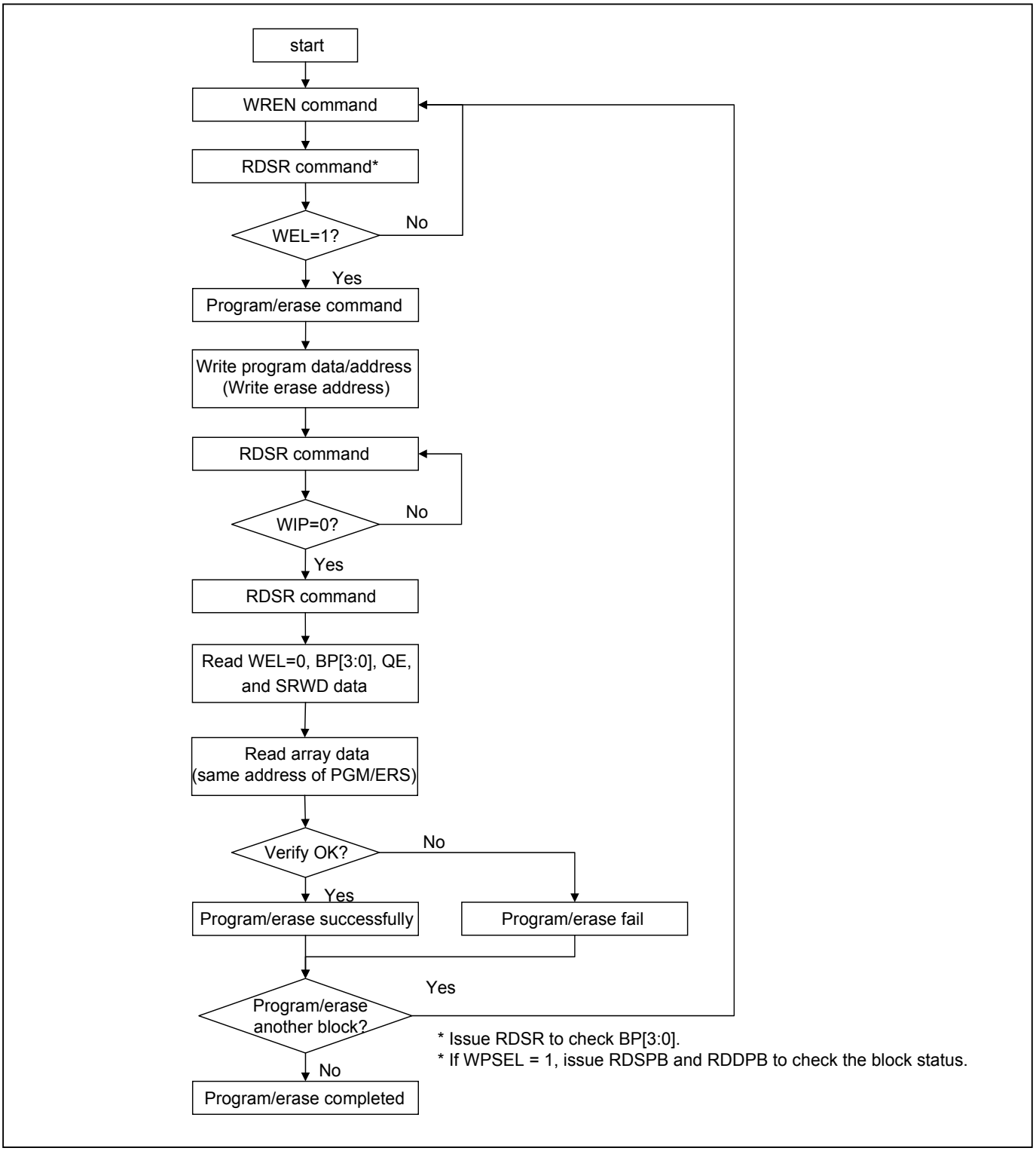

Figure 21. Program/Erase flow without read array data (read P_FAIL/E_FAIL flag)

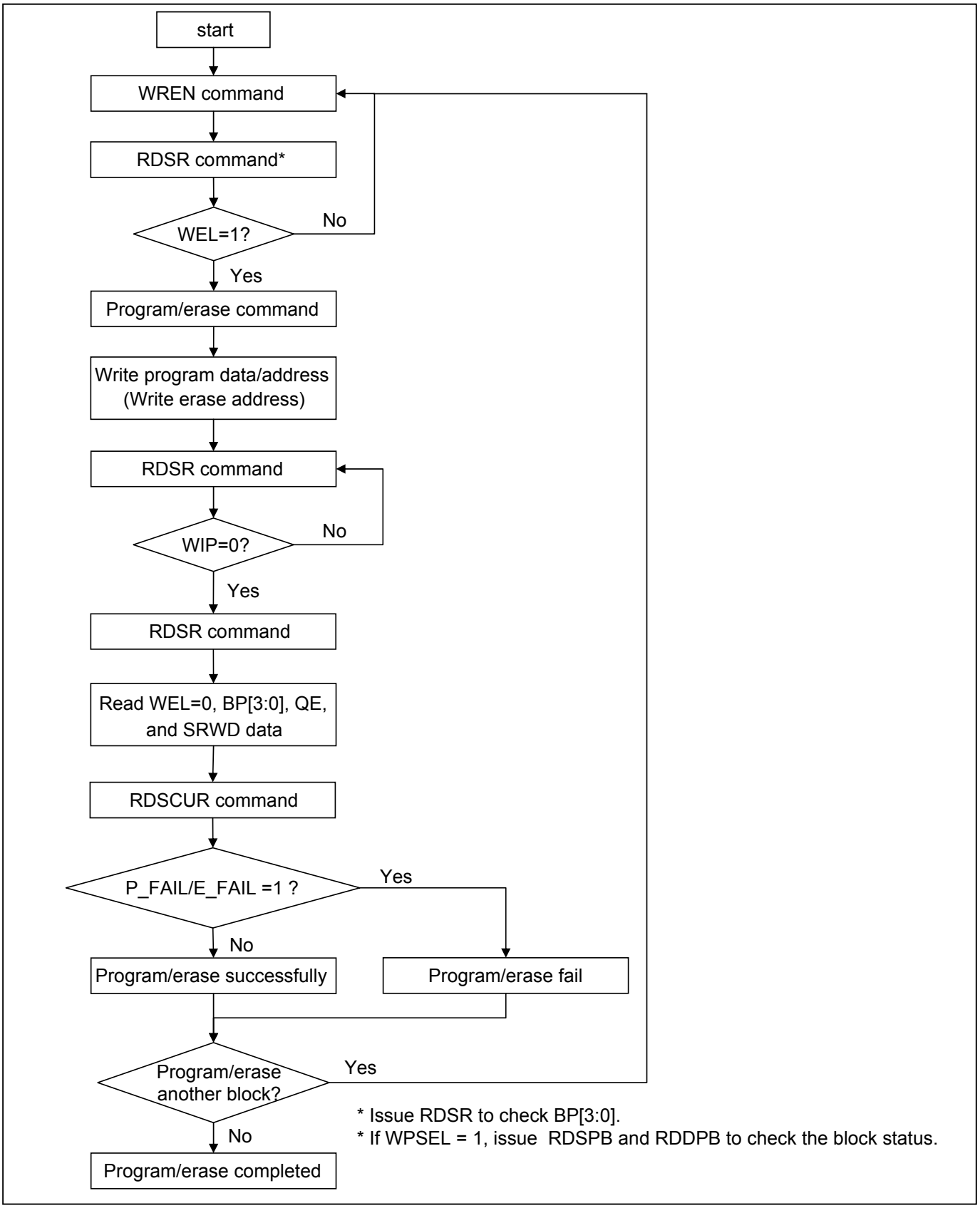

Status Register

The definition of the status register bits is as below:

WIP bit. The Write in Progress (WIP) bit, a volatile bit, indicates whether the device is busy in program/erase/write status register progress. When WIP bit sets to 1, which means the device is busy in program/erase/write status register progress. When WIP bit sets to 0, which means the device is not in progress of program/erase/write status register cycle.

WEL bit. The Write Enable Latch (WEL) bit, a volatile bit, indicates whether the device is set to internal write enable latch. When WEL bit sets to 1, which means the internal write enable latch is set, the device can accept program/erase/write status register instruction. When WEL bit sets to 0, which means no internal write enable latch; the device will not accept program/erase/write status register instruction. The program/erase command will be ignored if it is applied to a protected memory area. To ensure both WIP bit & WEL bit are both set to 0 and available for next program/erase/operations, WIP bit needs to be confirm to be 0 before polling WEL bit. After WIP bit confirmed, WEL bit needs to be confirm to be 0.

BP3, BP2, BP1, BP0 bits. The Block Protect (BP3, BP2, BP1, BP0) bits, non-volatile bits, indicate the protected area (as defined in *Table 2. Protected Area Sizes*) of the device to against the program/erase instruction without hardware protection mode being set. To write the Block Protect (BP3, BP2, BP1, BP0) bits requires the Write Status Register (WRSR) instruction to be executed. Those bits define the protected area of the memory to against Page Program (PP), Sector Erase (SE), Block Erase 32KB (BE32K), Block Erase (BE) and Chip Erase (CE) instructions (only if Block Protect bits (BP3:BP0) set to 0, the CE instruction can be executed). The BP3, BP2, BP1, BP0 bits are "0" as default. Which is unprotected.

QE bit. The Quad Enable (QE) bit, non-volatile bit, while it is "0" (factory default), it performs non-Quad and WP#, RESET# are enable. While QE is "1", it performs Quad I/O mode and WP#, RESET# are disabled. In the other word, if the system goes into four I/O mode (QE=1), the feature of HPM and RESET# will be disabled.

SRWD bit. The Status Register Write Disable (SRWD) bit, non-volatile bit, is operated together with Write Protection (WP#/SIO2) pin for providing hardware protection mode. The hardware protection mode requires SRWD sets to 1 and WP#/SIO2 pin signal is low stage. In the hardware protection mode, the Write Status Register (WRSR) instruction is no longer accepted for execution and the SRWD bit and Block Protect bits (BP3, BP2, BP1, BP0) are read only. The SRWD bit defaults to be "0".

Status Register

bit7	bit6	bit5	bit4	bit3	bit2	bit1	bit0
SRWD (status register write protect)	QE (Quad Enable)	BP3 (level of protected block)	BP2 (level of protected block)	BP1 (level of protected block)	BP0 (level of protected block)	WEL (write enable latch)	WIP (write in progress bit)
1=status register write disable	1=Quad Enable 0=not Quad Enable	(note 1)	(note 1)	(note 1)	(note 1)	1=write enable 0=not write enable	1=write operation 0=not in write operation
Non-volatile bit	Non-volatile bit	Non-volatile bit	Non-volatile bit	Non-volatile bit	Non-volatile bit	volatile bit	volatile bit

Note 1: See the *Table 2. Protected Area Sizes*.

Configuration Register

The Configuration Register is able to change the default status of Flash memory. Flash memory will be configured after the CR bit is set.

ODS bit

The output driver strength (ODS2, ODS1, ODS0) bits are volatile bits, which indicate the output driver level (as defined in *Output Driver Strength Table*) of the device. The Output Driver Strength is defaulted as 30 Ohms when delivered from factory. To write the ODS bits requires the Write Status Register (WRSR) instruction to be executed.

TB bit

The Top/Bottom (TB) bit is a non-volatile OTP bit. The Top/Bottom (TB) bit is used to configure the Block Protect area by BP bit (BP3, BP2, BP1, BP0), starting from TOP or Bottom of the memory array. The TB bit is defaulted as "0", which means Top area protect. When it is set as "1", the protect area will change to Bottom area of the memory device. To write the TB bits requires the Write Status Register (WRSR) instruction to be executed.

Table 7. Configuration Register Table

bit7	bit6	bit5	bit4	bit3	bit2	bit1	bit0
DC1 (Dummy cycle 1)	DC0 (Dummy cycle 0)	Reserved	Reserved	TB (top/bottom selected)	ODS 2 (output driver strength)	ODS 1 (output driver strength)	ODS 0 (output driver strength)
(note 2)	(note 2)	x	x	0=Top area protect 1=Bottom area protect (Default=0)	(note 1)	(note 1)	(note 1)
volatile bit	volatile bit	x	x	OTP	volatile bit	volatile bit	volatile bit

Note 1: see *Output Driver Strength Table*
Note 2: see *Dummy Cycle and Frequency Table (MHz)*

Output Driver Strength Table

ODS2	ODS1	ODS0	Description	Note
0	0	0	Reserved	Impedance at VCC/2
0	0	1	90 Ohms	
0	1	0	60 Ohms	
0	1	1	45 Ohms	
1	0	0	Reserved	
1	0	1	20 Ohms	
1	1	0	15 Ohms	
1	1	1	30 Ohms (Default)	

Dummy Cycle and Frequency Table (MHz)

DC[1:0]	Numbers of Dummy clock cycles	Fast Read	Dual Output Fast Read	Quad Output Fast Read
00 (default)	8	104	104	104
01	6	104	104	84
10	8	104	104	104
11	10	133	133	133

DC[1:0]	Numbers of Dummy clock cycles	Dual IO Fast Read
00 (default)	4	84
01	6	104
10	8	104
11	10	133

DC[1:0]	Numbers of Dummy clock cycles	Quad IO Fast Read
00 (default)	6	84
01	4	70
10	8	104
11	10	133

9-9. Write Status Register (WRSR)

The WRSR instruction is for changing the values of Status Register Bits and Configuration Register Bits. Before sending WRSR instruction, the Write Enable (WREN) instruction must be decoded and executed to set the Write Enable Latch (WEL) bit in advance. The WRSR instruction can change the value of Block Protect (BP3, BP2, BP1, BP0) bits to define the protected area of memory (as shown in *Table 2. Protected Area Sizes*). The WRSR also can set or reset the Quad enable (QE) bit and set or reset the Status Register Write Disable (SRWD) bit in accordance with Write Protection (WP#/SIO2) pin signal, but has no effect on bit1(WEL) and bit0 (WIP) of the status register. The WRSR instruction cannot be executed once the Hardware Protected Mode (HPM) is entered.

The sequence of issuing WRSR instruction is: CS# goes low→ sending WRSR instruction code→ Status Register data on SI→CS# goes high.

The CS# must go high exactly at the 8 bits or 16 bits data boundary; otherwise, the instruction will be rejected and not executed. The self-timed Write Status Register cycle time (tW) is initiated as soon as Chip Select (CS#) goes high. The Write in Progress (WIP) bit still can be check out during the Write Status Register cycle is in progress. The WIP sets 1 during the tW timing, and sets 0 when Write Status Register Cycle is completed, and the Write Enable Latch (WEL) bit is reset.

Figure 22. Write Status Register (WRSR) Sequence (SPI Mode)

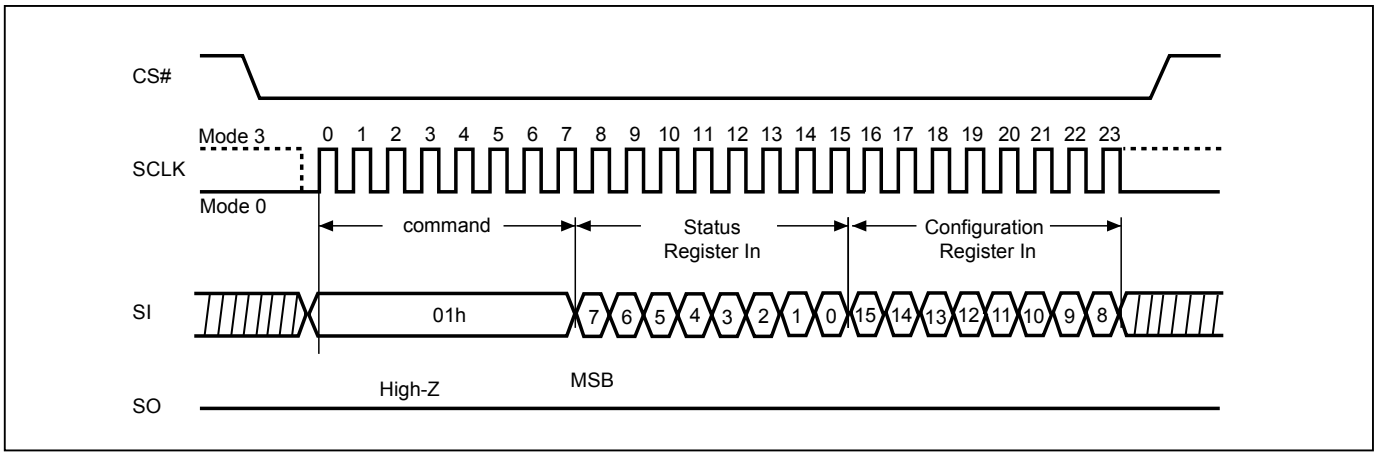

Note : The CS# must go high exactly at 8 bits or 16 bits data boundary to completed the write register command.

Figure 23. Write Status Register (WRSR) Sequence (QPI Mode)

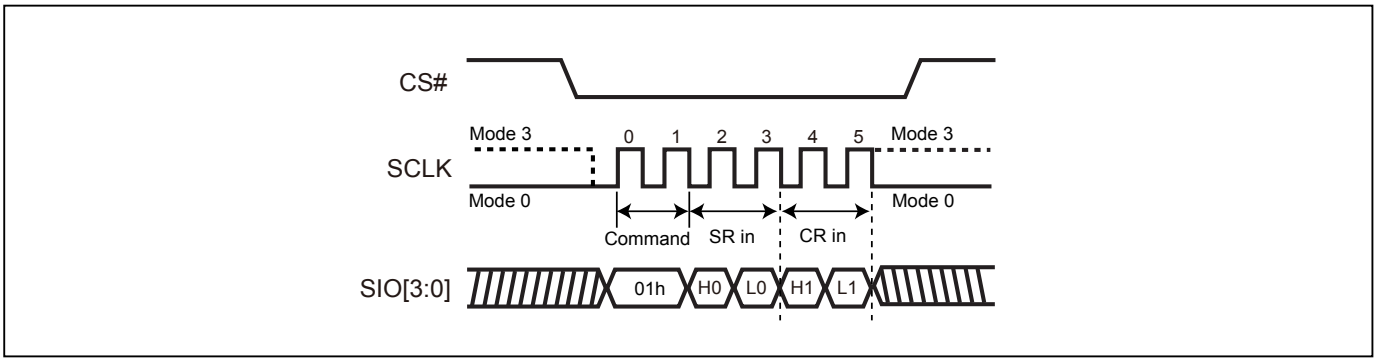

Software Protected Mode (SPM):

- When SRWD bit=0, no matter WP#/SIO2 is low or high, the WREN instruction may set the WEL bit and can change the values of SRWD, BP3, BP2, BP1, BP0. The protected area, which is defined by BP3, BP2, BP1, BP0 and T/B bit, is at software protected mode (SPM).
- When SRWD bit=1 and WP#/SIO2 is high, the WREN instruction may set the WEL bit can change the values of SRWD, BP3, BP2, BP1, BP0. The protected area, which is defined by BP3, BP2, BP1, BP0 and T/B bit, is at software protected mode (SPM)

Note:

If SRWD bit=1 but WP#/SIO2 is low, it is impossible to write the Status Register even if the WEL bit has previously been set. It is rejected to write the Status Register and not be executed.

Hardware Protected Mode (HPM):

- When SRWD bit=1, and then WP#/SIO2 is low (or WP#/SIO2 is low before SRWD bit=1), it enters the hardware protected mode (HPM). The data of the protected area is protected by software protected mode by BP3, BP2, BP1, BP0 and T/B bit and hardware protected mode by the WP#/SIO2 to against data modification.

Note:

To exit the hardware protected mode requires WP#/SIO2 driving high once the hardware protected mode is entered. If the WP#/SIO2 pin is permanently connected to high, the hardware protected mode can never be entered; only can use software protected mode via BP3, BP2, BP1, BP0 and T/B bit.
If the system enter QPI or set QE=1, the feature of HPM will be disabled.

Table 8. Protection Modes

Mode	Status register condition	WP# and SRWD bit status	Memory
Software protection mode (SPM)	Status register can be written in (WEL bit is set to "1") and the SRWD, BP0-BP3 bits can be changed	WP#=1 and SRWD bit=0, or WP#=0 and SRWD bit=0, or WP#=1 and SRWD=1	The protected area cannot be program or erase.
Hardware protection mode (HPM)	The SRWD, BP0-BP3 of status register bits cannot be changed	WP#=0, SRWD bit=1	The protected area cannot be program or erase.

Note:

1. As defined by the values in the Block Protect (BP3, BP2, BP1, BP0) bits of the Status Register, as shown in *Table 2. Protected Area Sizes*.

Figure 24. WRSR flow

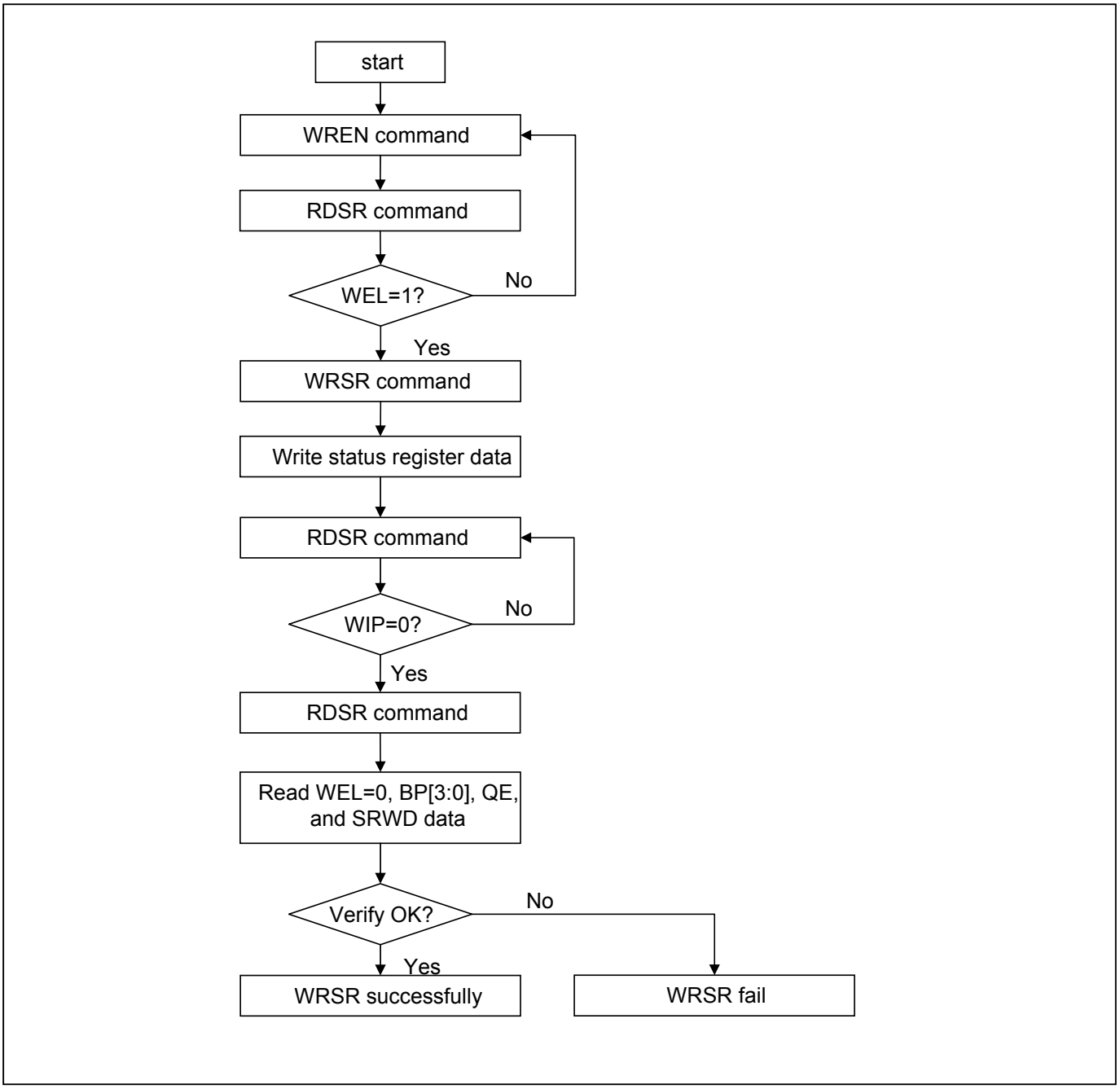

Figure 25. WP# Setup Timing and Hold Timing during WRSR when SRWD=1

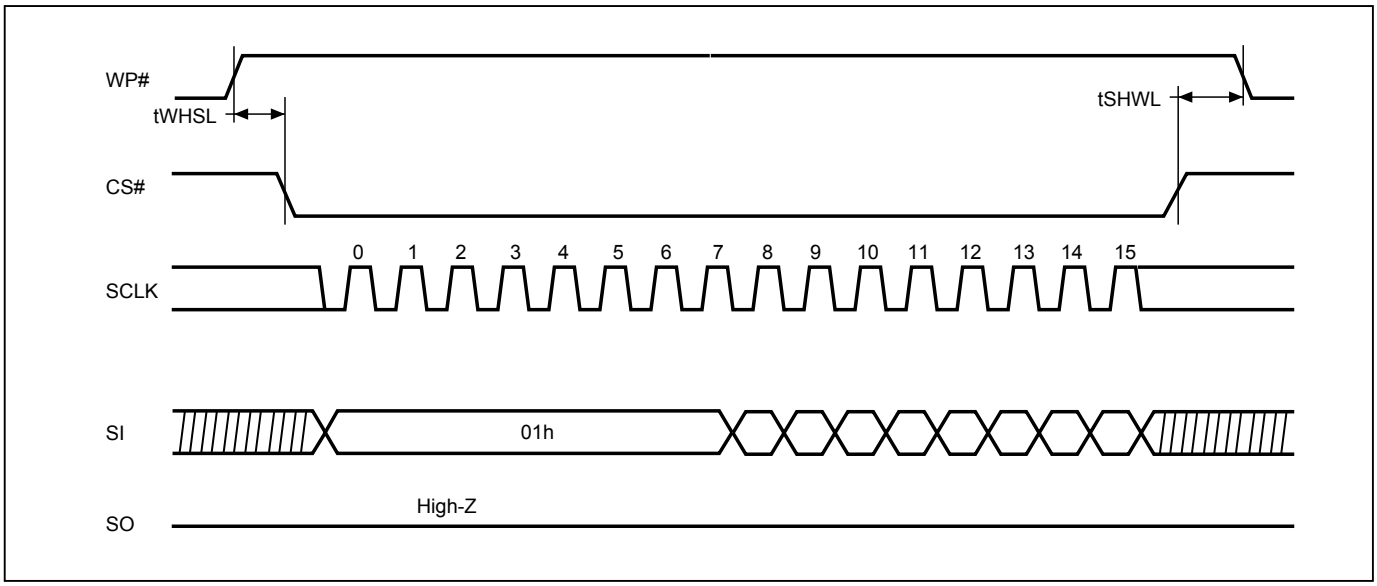

Note: WP# must be kept high until the embedded operation finish.

9-10. Read Data Bytes (READ)

The read instruction is for reading data out. The address is latched on rising edge of SCLK, and data shifts out on the falling edge of SCLK at a maximum frequency fR. The first address byte can be at any location. The address is automatically increased to the next higher address after each byte data is shifted out, so the whole memory can be read out at a single READ instruction. The address counter rolls over to 0 when the highest address has been reached.

The sequence of issuing READ instruction is: CS# goes low→sending READ instruction code→ 3-byte address on SI→ data out on SO→to end READ operation can use CS# to high at any time during data out.

Figure 26. Read Data Bytes (READ) Sequence (SPI Mode only)

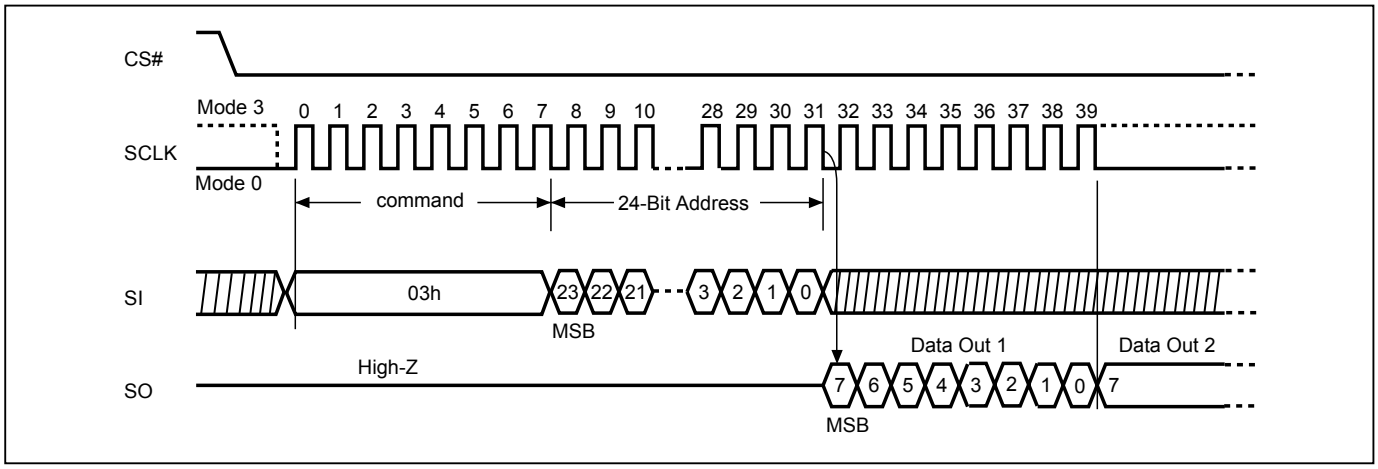

9-11. Read Data Bytes at Higher Speed (FAST_READ)

The FAST_READ instruction is for quickly reading data out. The address is latched on rising edge of SCLK, and data of each bit shifts out on the falling edge of SCLK at a maximum frequency fC. The first address byte can be at any location. The address is automatically increased to the next higher address after each byte data is shifted out, so the whole memory can be read out at a single FAST_READ instruction. The address counter rolls over to 0 when the highest address has been reached.

Read on SPI Mode The sequence of issuing FAST_READ instruction is: CS# goes low→ sending FAST_READ instruction code→ 3-byte address on SI→ 8 dummy cycles (default)→ data out on SO→ to end FAST_READ operation can use CS# to high at any time during data out.

In the performance-enhancing mode, P[7:4] must be toggling with P[3:0] ; likewise P[7:0]=A5h,5Ah,F0h or 0Fh can make this mode continue and reduce the next 4READ instruction. Once P[7:4] is no longer toggling with P[3:0]; likewise P[7:0]=FFh,00h,AAh or 55h and afterwards CS# is raised and then lowered, the system then will escape from performance enhance mode and return to normal operation.

While Program/Erase/Write Status Register cycle is in progress, FAST_READ instruction is rejected without any impact on the Program/Erase/Write Status Register current cycle.

Figure 27. Read at Higher Speed (FAST_READ) Sequence (SPI Mode)

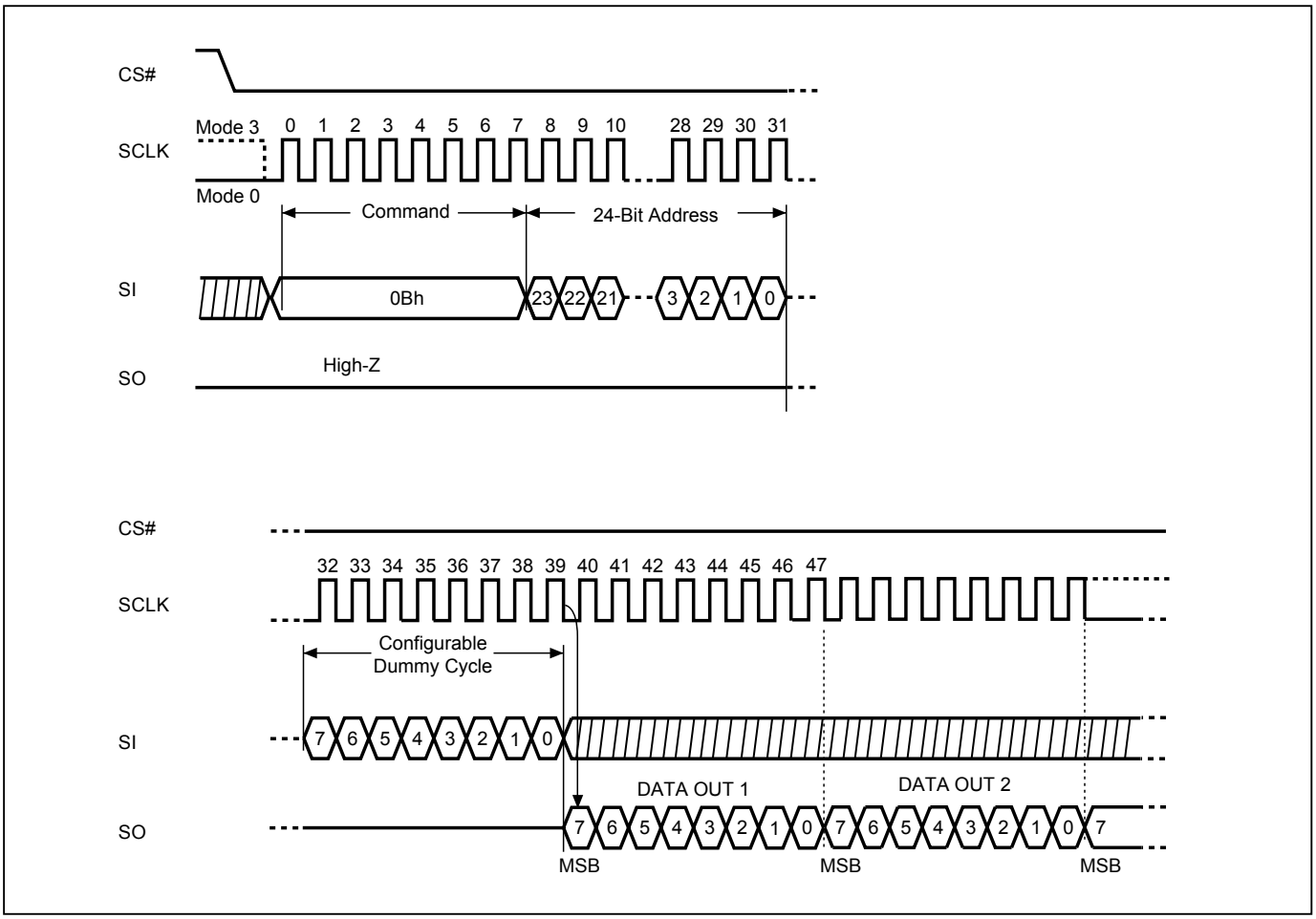

9-12. Dual Output Read Mode (DREAD)

The DREAD instruction enable double throughput of Serial Flash in read mode. The address is latched on rising edge of SCLK, and data of every two bits (interleave on 2 I/O pins) shift out on the falling edge of SCLK at a maximum frequency fT. The first address byte can be at any location. The address is automatically increased to the next higher address after each byte data is shifted out, so the whole memory can be read out at a single DREAD instruction. The address counter rolls over to 0 when the highest address has been reached. Once writing DREAD instruction, the following data out will perform as 2-bit instead of previous 1-bit.

The sequence of issuing DREAD instruction is: CS# goes low→ sending DREAD instruction→3-byte address on SIO0→ 8 dummy cycles (default) on SIO0→ data out interleave on SIO1 & SIO0→ to end DREAD operation can use CS# to high at any time during data out.

While Program/Erase/Write Status Register cycle is in progress, DREAD instruction is rejected without any impact on the Program/Erase/Write Status Register current cycle.

Figure 28. Dual Read Mode Sequence

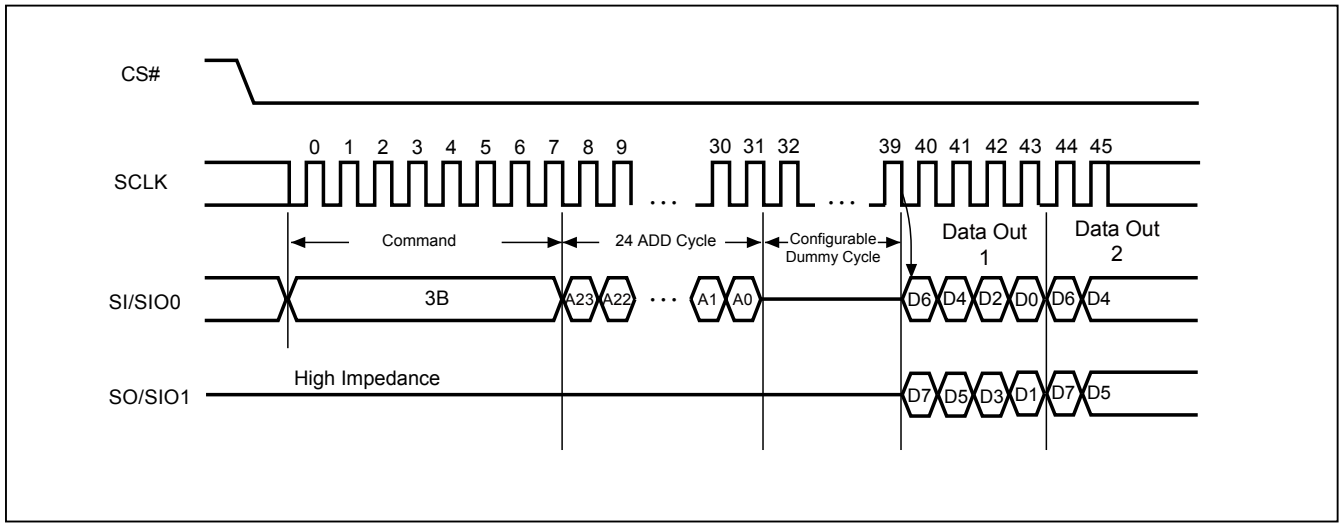

9-13. 2 x I/O Read Mode (2READ)

The 2READ instruction enable double throughput of Serial Flash in read mode. The address is latched on rising edge of SCLK, and data of every two bits (interleave on 2 I/O pins) shift out on the falling edge of SCLK at a maximum frequency fT. The first address byte can be at any location. The address is automatically increased to the next higher address after each byte data is shifted out, so the whole memory can be read out at a single 2READ instruction. The address counter rolls over to 0 when the highest address has been reached. Once writing 2READ instruction, the following address/dummy/data out will perform as 2-bit instead of previous 1-bit.

The sequence of issuing 2READ instruction is: CS# goes low→ sending 2READ instruction→ 3-byte address interleave on SIO1 & SIO0→ 4 dummy cycles (default) on SIO1 & SIO0→ data out interleave on SIO1 & SIO0→ to end 2READ operation can use CS# to high at any time during data out.

While Program/Erase/Write Status Register cycle is in progress, 2READ instruction is rejected without any impact on the Program/Erase/Write Status Register current cycle.

Figure 29. 2 x I/O Read Mode Sequence (SPI Mode only)

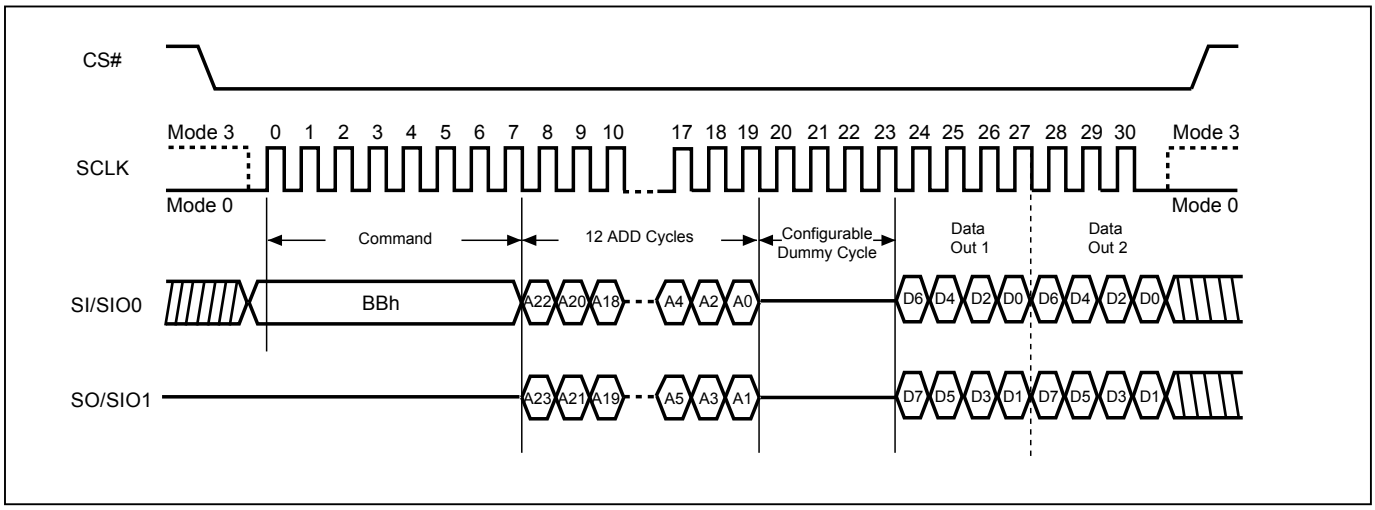

9-14. Quad Read Mode (QREAD)

The QREAD instruction enable quad throughput of Serial Flash in read mode. The address is latched on rising edge of SCLK, and data of every four bits (interleave on 4 I/O pins) shift out on the falling edge of SCLK at a maximum frequency fQ. The first address byte can be at any location. The address is automatically increased to the next higher address after each byte data is shifted out, so the whole memory can be read out at a single QREAD instruction. The address counter rolls over to 0 when the highest address has been reached. Once writing QREAD instruction, the following data out will perform as 4-bit instead of previous 1-bit.

The sequence of issuing QREAD instruction is: CS# goes low→ sending QREAD instruction → 3-byte address on SI → 8 dummy cycle (Default) → data out interleave on SIO3, SIO2, SIO1 & SIO0→ to end QREAD operation can use CS# to high at any time during data out.

While Program/Erase/Write Status Register cycle is in progress, QREAD instruction is rejected without any impact on the Program/Erase/Write Status Register current cycle.

Figure 30. Quad Read Mode Sequence

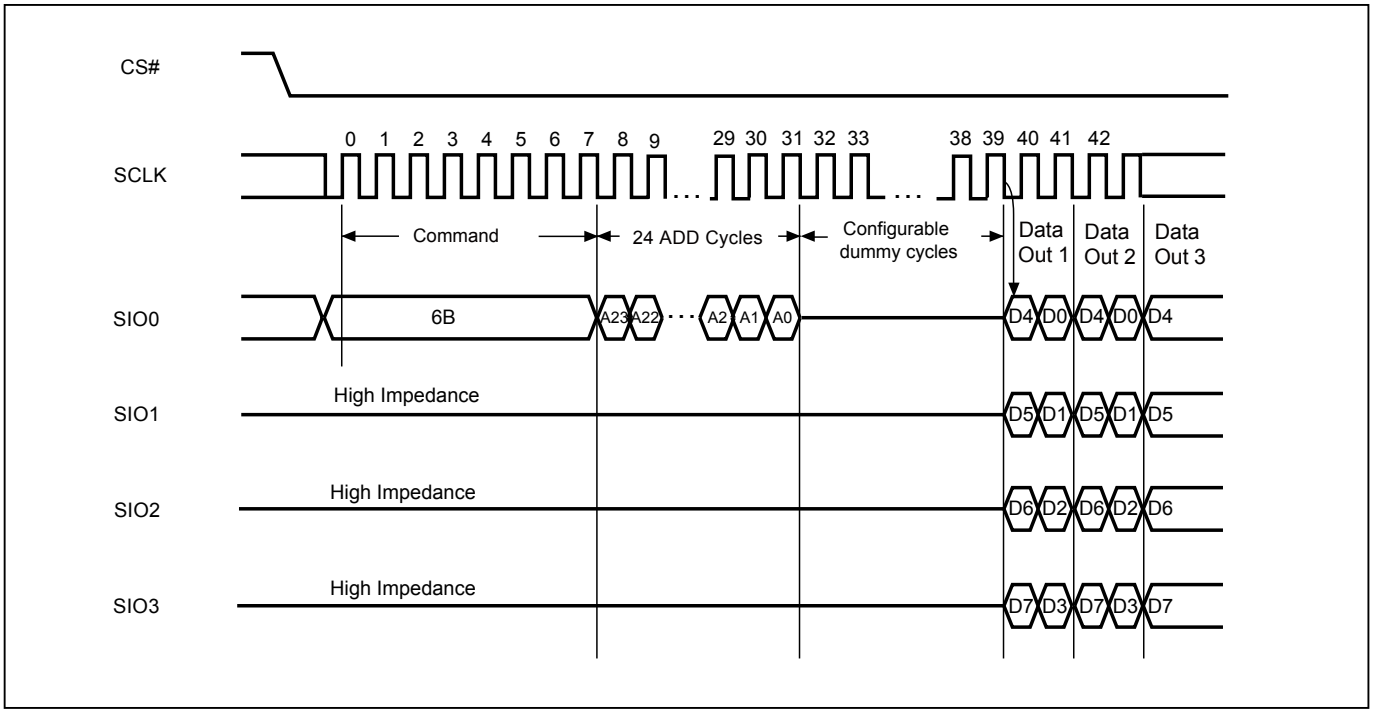

9-15. 4 x I/O Read Mode (4READ)

The 4READ instruction enable quad throughput of Serial Flash in read mode. A Quad Enable (QE) bit of status Register must be set to "1" before sending the 4READ instruction. The address is latched on rising edge of SCLK, and data of every four bits (interleave on 4 I/O pins) shift out on the falling edge of SCLK at a maximum frequency fQ. The first address byte can be at any location. The address is automatically increased to the next higher address after each byte data is shifted out, so the whole memory can be read out at a single 4READ instruction. The address counter rolls over to 0 when the highest address has been reached. Once writing 4READ instruction, the following address/dummy/data out will perform as 4-bit instead of previous 1-bit.

4 x I/O Read on SPI Mode (4READ) The sequence of issuing 4READ instruction is: CS# goes low→ sending 4READ instruction→ 3-byte address interleave on SIO3, SIO2, SIO1 & SIO0→ 6 dummy cycles (Default) →data out interleave on SIO3, SIO2, SIO1 & SIO0→ to end 4READ operation can use CS# to high at any time during data out.

4 x I/O Read on QPI Mode (4READ) The 4READ instruction also support on QPI command mode. The sequence of issuing 4READ instruction QPI mode is: CS# goes low→ sending 4READ instruction→ 3-byte address interleave on SIO3, SIO2, SIO1 & SIO0→ 6 dummy cycles (Default) →data out interleave on SIO3, SIO2, SIO1 & SIO0→ to end 4READ operation can use CS# to high at any time during data out.

While Program/Erase/Write Status Register cycle is in progress, 4READ instruction is rejected without any impact on the Program/Erase/Write Status Register current cycle.

Figure 31. 4 x I/O Read Mode Sequence (SPI Mode)

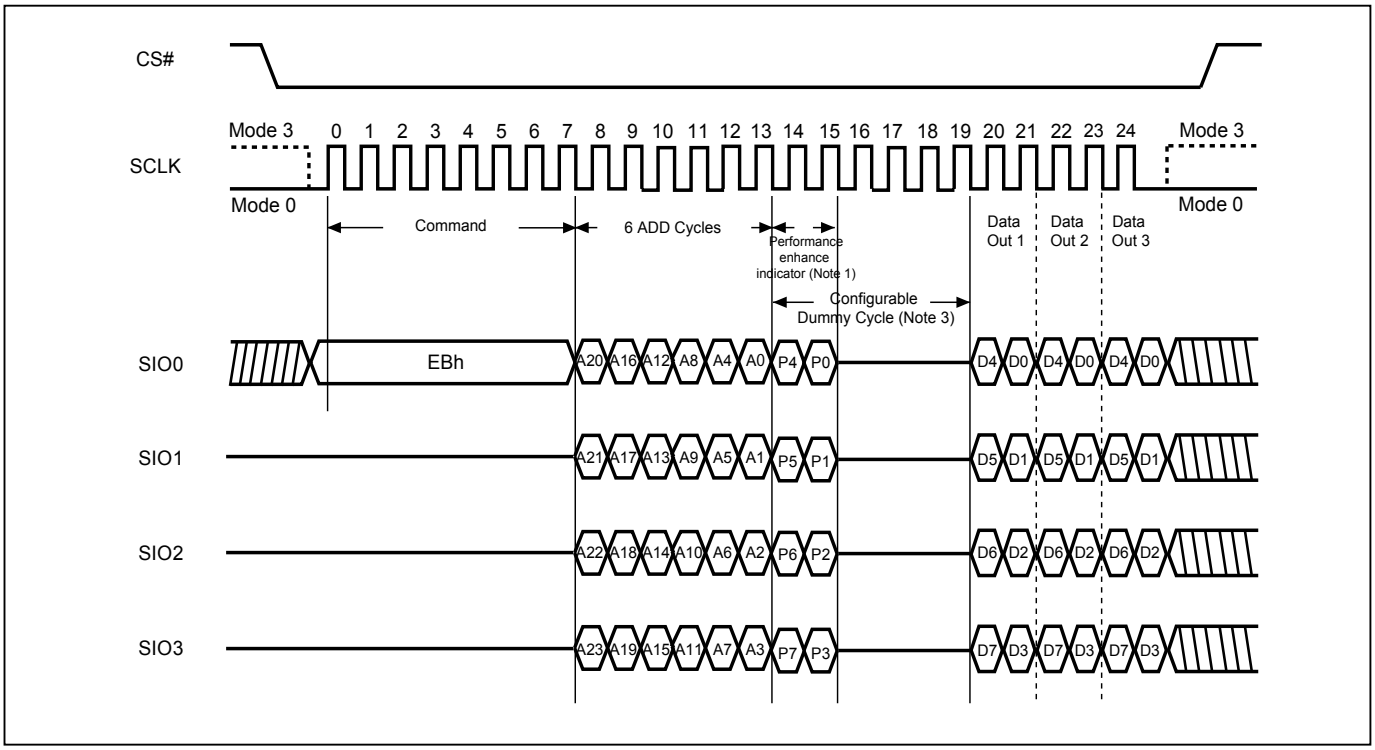

Notes:
1. Hi-impedance is inhibited for the two clock cycles.
2. P7≠P3, P6≠P2, P5≠P1 & P4≠P0 (Toggling) is inhibited.
3. Configuration Dummy cycle numbers will be different depending on the bit6 & bit 7 (DC0 & DC1) setting in configuration register.

Figure 32. 4 x I/O Read Mode Sequence (QPI Mode)

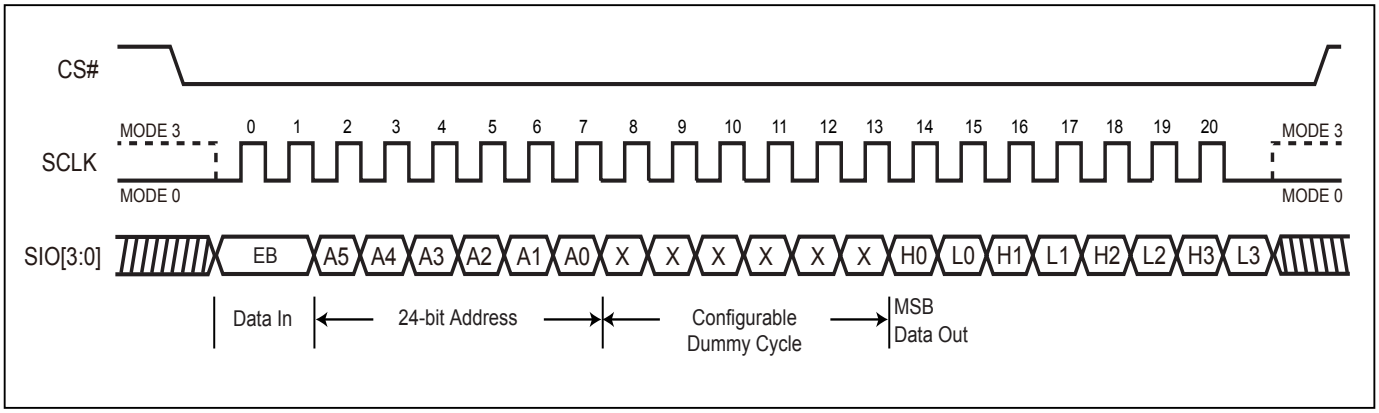

9-16. Burst Read

This device supports Burst Read in both SPI and QPI mode.
To set the Burst length, following command operation is required to issue command: “C0h” in the first Byte (8-clocks), following 4 clocks defining wrap around enable with “0h” and disable with“1h”.

The next 4 clocks are to define wrap around depth. Their definitions are as the following table:

Data	Wrap Around	Wrap Depth
00h	Yes	8-byte
01h	Yes	16-byte
02h	Yes	32-byte
03h	Yes	64-byte
1xh	No	X

The wrap around unit is defined within the 256Byte page, with random initial address. It is defined as “wrap-around mode disable” for the default state of the device. To exit wrap around, it is required to issue another “C0” command in which data=‘1xh”. Otherwise, wrap around status will be retained until power down or reset command. To change wrap around depth, it is requried to issue another “C0” command in which data=“0xh”. QPI “EBh” and SPI “EBh” support wrap around feature after wrap around is enabled. Burst read is supported in both SPI and QPI mode. The device is default without Burst read.

Figure 33. SPI Mode

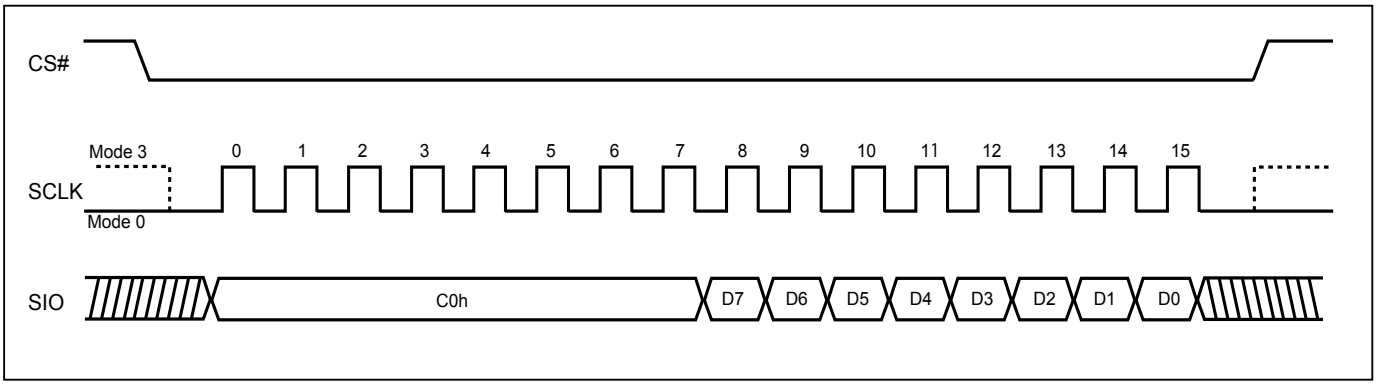

Figure 34. QPI Mode

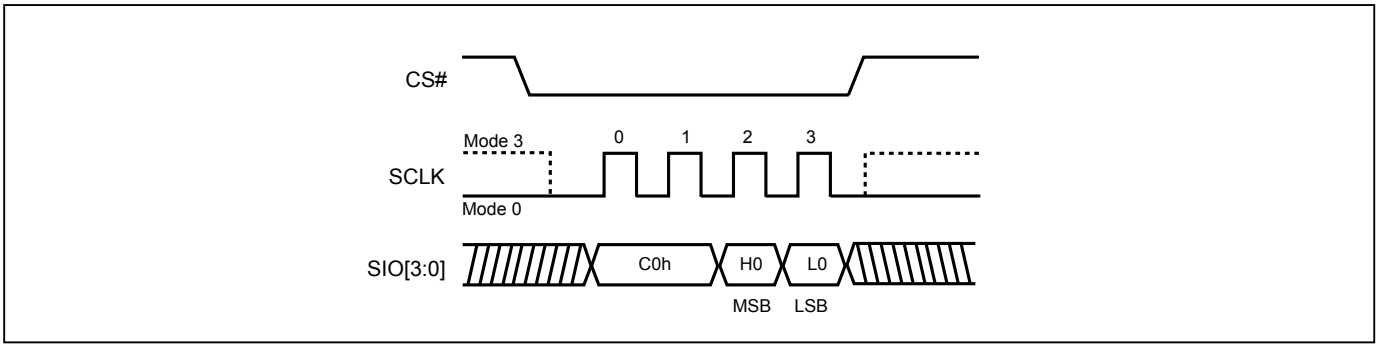

Note: MSB=Most Significant Bit
LSB=Least Significant Bit

9-17. Performance Enhance Mode

The device could waive the command cycle bits if the two cycle bits after address cycle toggles.

Performance enhance mode is supported in both SPI and QPI mode.

In QPI mode, “EBh” and SPI “EBh” commands support enhance mode. The performance enhance mode is not supported in dual I/O mode.

To enter performance-enhancing mode, P[7:4] must be toggling with P[3:0]; likewise P[7:0]=A5h, 5Ah, F0h or 0Fh can make this mode continue and skip the next 4READ instruction. To leave enhance mode, P[7:4] is no longer toggling with P[3:0]; likewise P[7:0]=FFh, 00h, AAh or 55h along with CS# is afterwards raised and then lowered. Issuing ”FFh” command can also exit enhance mode. The system then will leave performance enhance mode and return to normal operation.

After entering enhance mode, following CS# go high, the device will stay in the read mode and treat CS# go low of the first clock as address instead of command cycle.

Another sequence of issuing 4READ instruction especially useful in random access is : CS# goes low→sending 4 READ instruction→3-bytes address interleave on SIO3, SIO2, SIO1 & SIO0 →performance enhance toggling bit P[7:0]→ 4 dummy cycles (Default) →data out still CS# goes high → CS# goes low (reduce 4 Read instruction) → 3-bytes random access address.

Figure 35. 4 x I/O Read enhance performance Mode Sequence (SPI Mode)

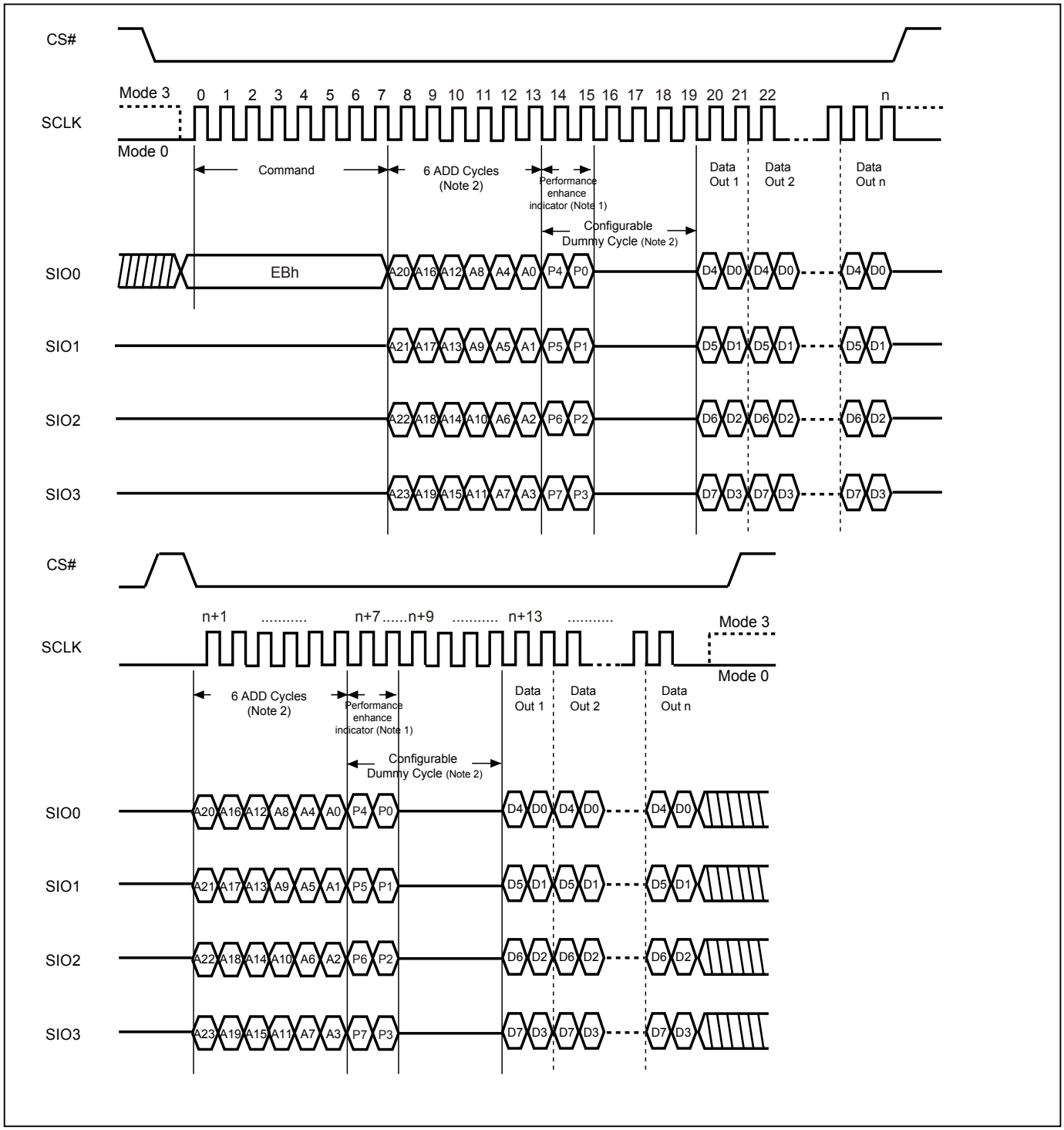

Notes:

1. If not using performance enhance recommend to keep 1 or 0 in performance enhance indicator.
2. Configuration Dummy cycle numbers will be different depending on the bit6 & bit 7 (DC0 & DC1) setting in configuration register.

Figure 36. 4 x I/O Read enhance performance Mode Sequence (QPI Mode)

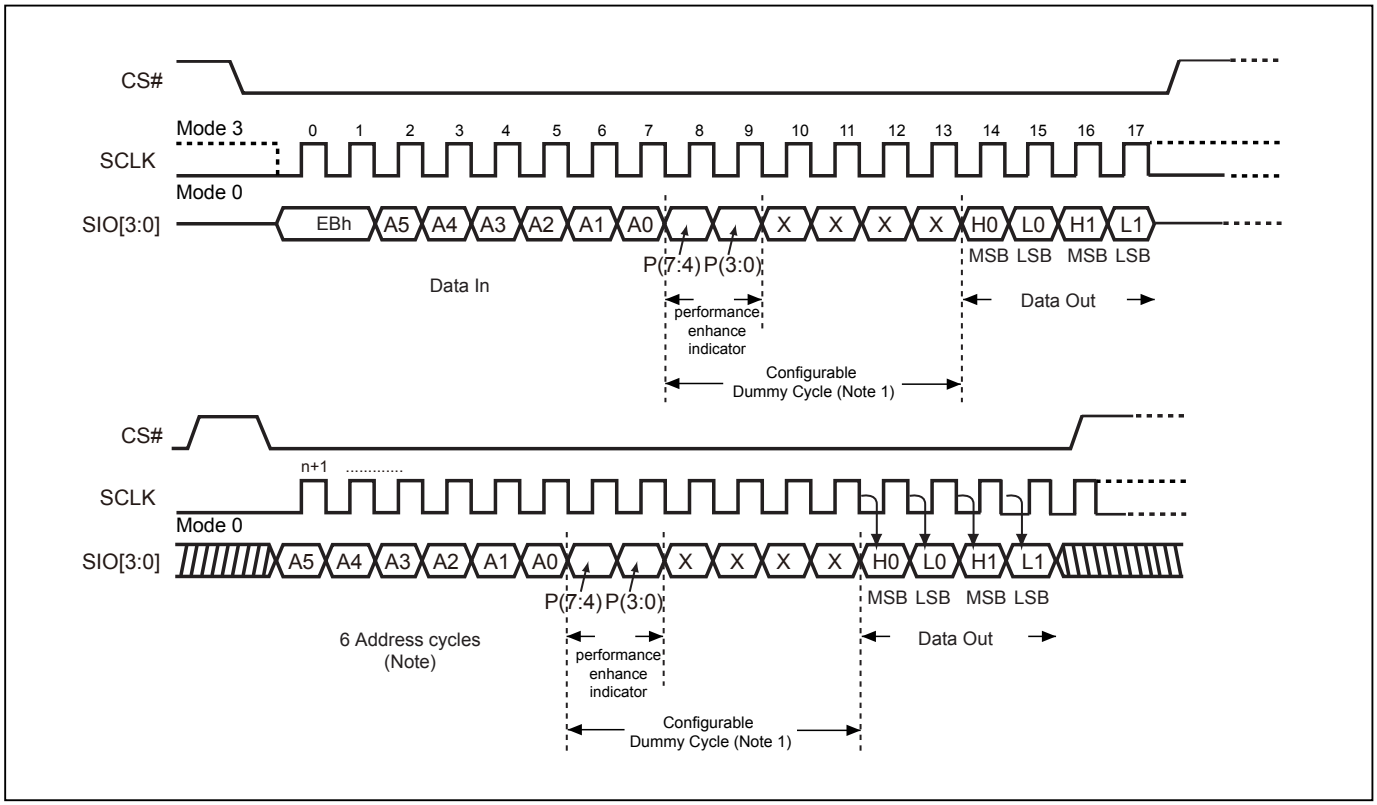

Notes:

1. Configuration Dummy cycle numbers will be different depending on the bit6 & bit 7 (DC0 & DC1) setting in configuration register.

9-18. Performance Enhance Mode Reset

To conduct the Performance Enhance Mode Reset operation in SPI mode, FFh data cycle, 8 clocks, should be issued in 1I/O sequence. In QPI Mode, FFFFFFFFh data cycle, 8 clocks, in 4I/O should be issued.

If the system controller is being Reset during operation, the flash device will return to the standard SPI operation.

Both SPI (8 clocks) and QPI (2 clocks) command cycle can accept by this instruction. The SIO[3:1] are don't care when during SPI mode.

Figure 37. Performance Enhance Mode Reset for Fast Read Quad I/O (SPI Mode)

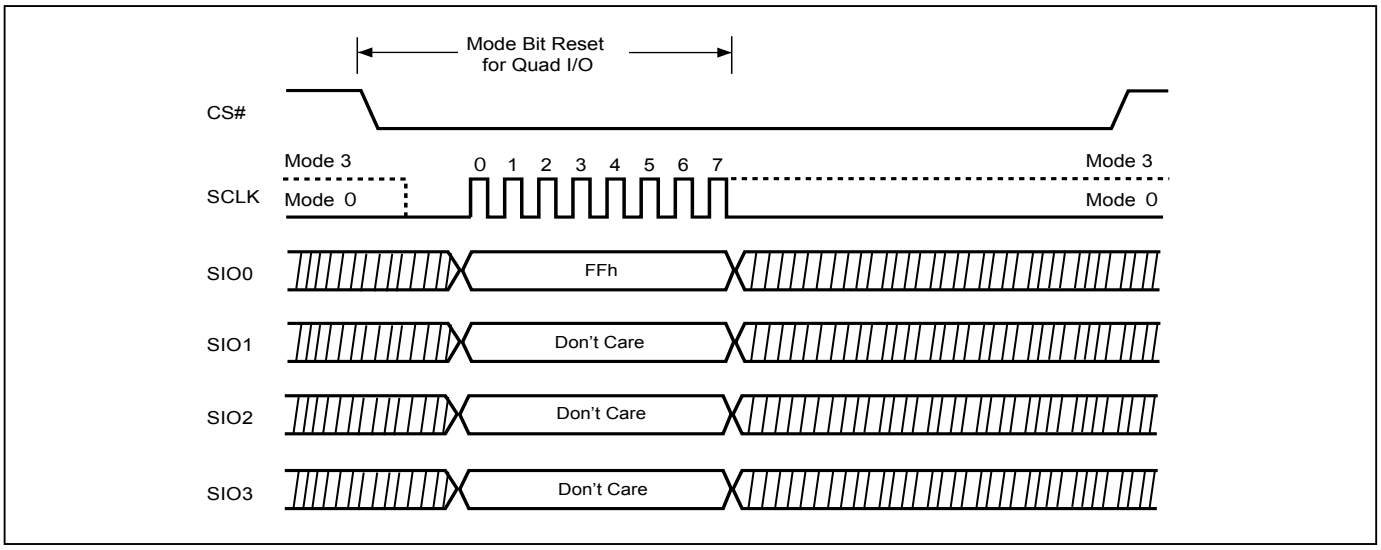

Figure 38. Performance Enhance Mode Reset for Fast Read Quad I/O (QPI Mode)

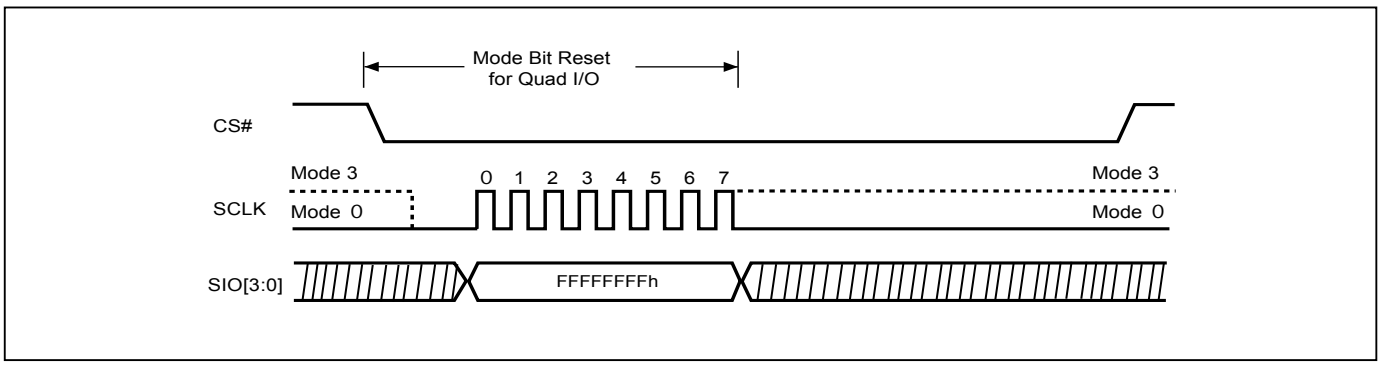

9-19. Fast Boot

The Fast Boot Feature provides the ability to automatically execute read operation after power on cycle or reset without any read instruction.

A Fast Boot Register is provided on this device. It can enable the Fast Boot function and also define the number of delay cycles and start address (where boot code being transferred). Instruction WRFBR (write fast boot register) and ESFBR (erase fast boot register) can be used for the status configuration or alternation of the Fast Boot Register bit. RDFBR (read fast boot register) can be used to verify the program state of the Fast Boot Register. The default number of delay cycles is 13 cycles, and there is a 16bytes boundary address for the start of boot code access.

When CS# starts to go low, data begins to output from default address after the delay cycles (default as 13 cycles). After CS# returns to go high, the device will go back to standard SPI mode. In the fast boot data out process from CS# goes low to CS# goes high, a minimum of one byte must be output.

Once Fast Boot feature has been enabled, the device will automatically start a read operation after power on cycle, reset command, or hardware reset operation.

The fast Boot feature can support Single I/O and Quad I/O interface. If the QE bit of Status Register is “0”, the data is output by Single I/O interface. If the QE bit of Status Register is set to “1”, the data is output by Quad I/O interface.

Fast Boot Register (FBR)

Bits	Description	Bit Status	Default State	Type
31 to 4	FBSA (FastBoot Start Address)	16 bytes boundary address for the start of boot code access.	FFFFFFF	Non-Volatile
3	x		1	Non-Volatile
2 to 1	FBSD (FastBoot Start Delay Cycle)	00: 7 delay cycles 01: 9 delay cycles 10: 11 delay cycles 11: 13 delay cycles	11	Non-Volatile
0	FBE (FastBoot Enable)	0=FastBoot is enabled. 1=FastBoot is not enabled.	1	Non-Volatile

Note: If FBSD = 11, the maximum clock frequency is 133 MHz
If FBSD = 10, the maximum clock frequency is 104 MHz
If FBSD = 01, the maximum clock frequency is 84 MHz
If FBSD = 00, the maximum clock frequency is 70 MHz

Figure 39. Fast Boot Sequence (QE bit =0)

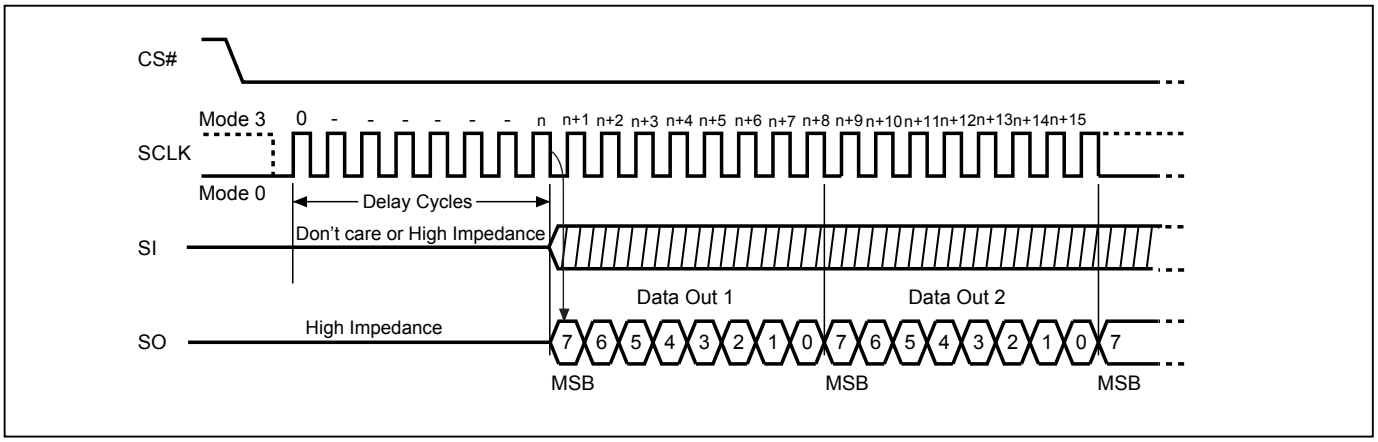

Note: If FBSD = 11, delay cycles is 13 and n is 12.
If FBSD = 10, delay cycles is 11 and n is 10.
If FBSD = 01, delay cycles is 9 and n is 8.
If FBSD = 00, delay cycles is 7 and n is 6.

Figure 40. Fast Boot Sequence (QE bit =1)

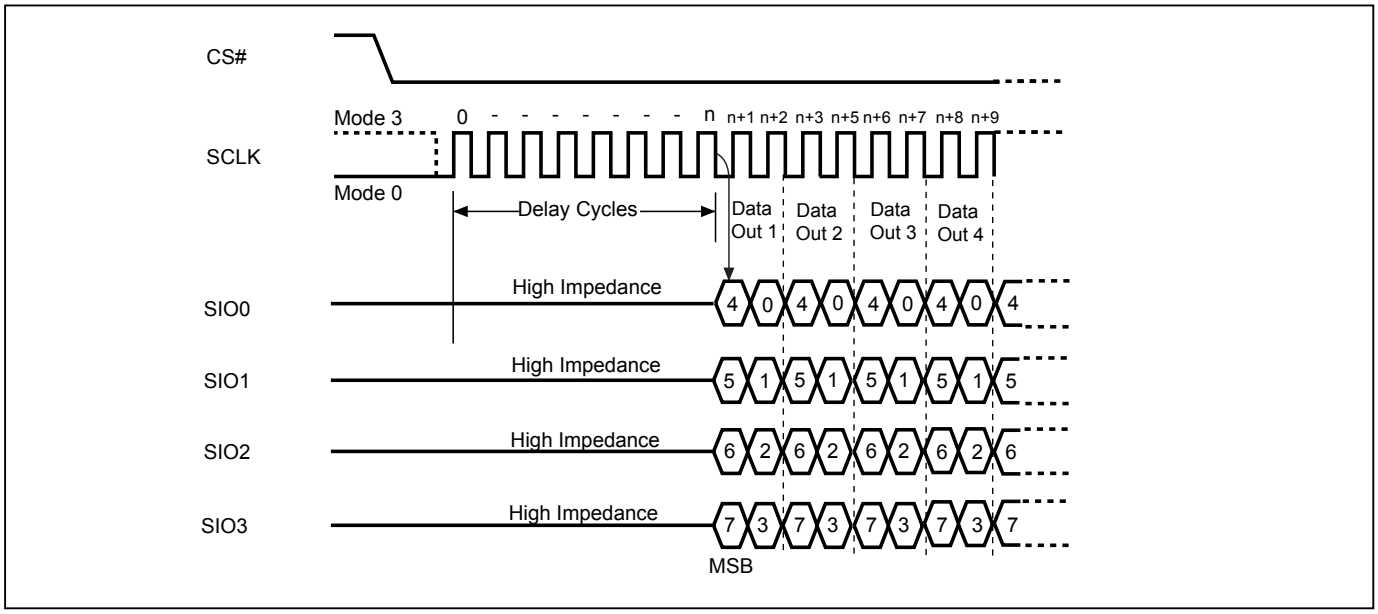

Note: If FBSD = 11, delay cycles is 13 and n is 12.
If FBSD = 10, delay cycles is 11 and n is 10.
If FBSD = 01, delay cycles is 9 and n is 8.
If FBSD = 00, delay cycles is 7 and n is 6.

Figure 41. Read Fast Boot Register (RDFBR) Sequence

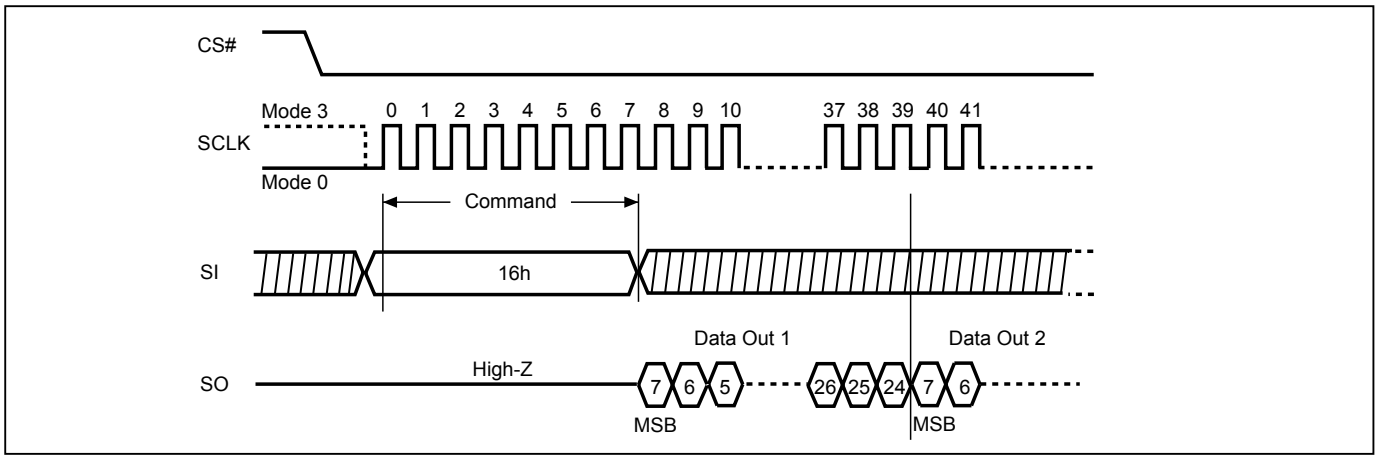

Figure 42. Write Fast Boot Register (WRFBR) Sequence

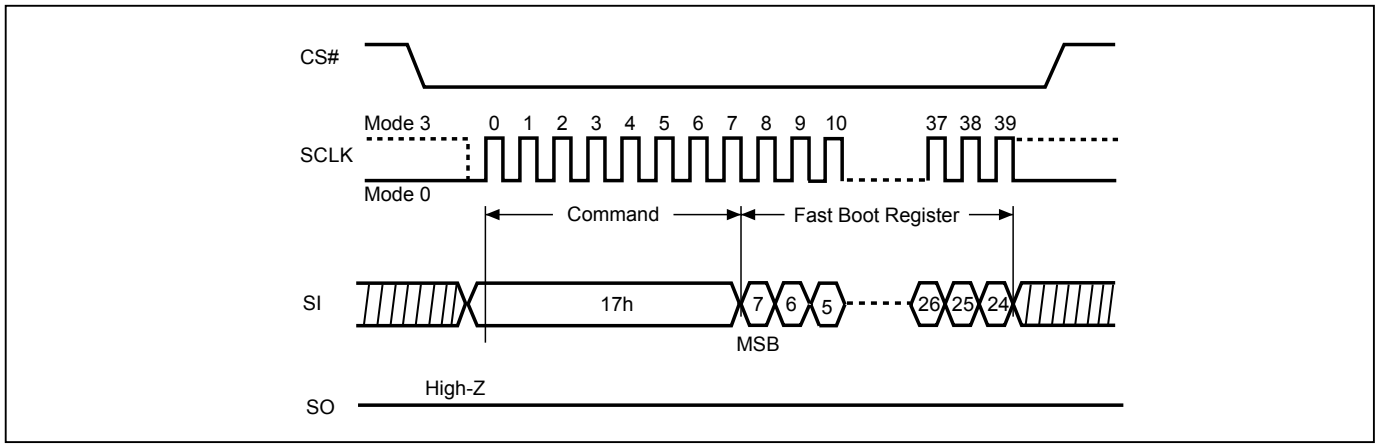

Figure 43. Erase Fast Boot Register (ESFBR) Sequence

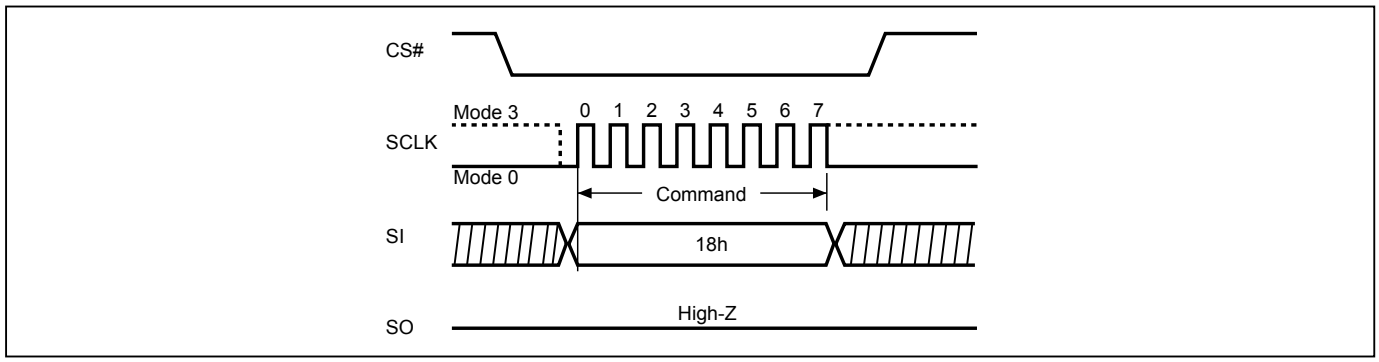

9-20. Sector Erase (SE)

The Sector Erase (SE) instruction is for erasing the data of the chosen sector to be "1". The instruction is used for any 4K-byte sector. A Write Enable (WREN) instruction must execute to set the Write Enable Latch (WEL) bit before sending the Sector Erase (SE). Any address of the sector (see *Table 4. Memory Organization*) is a valid address for Sector Erase (SE) instruction. The CS# must go high exactly at the byte boundary (the least significant bit of the address byte been latched-in); otherwise, the instruction will be rejected and not executed.

Address bits [Am-A12] (Am is the most significant address) select the sector address.

The sequence of issuing SE instruction is: CS# goes low→ sending SE instruction code→ 3-byte address on SI→ CS# goes high.

Both SPI (8 clocks) and QPI (2 clocks) command cycle can accept by this instruction. The SIO[3:1] are don't care when during SPI mode.

The self-timed Sector Erase Cycle time (tSE) is initiated as soon as Chip Select (CS#) goes high. The Write in Progress (WIP) bit still can be checked while the Sector Erase cycle is in progress. The WIP sets 1 during the tSE timing, and clears when Sector Erase Cycle is completed, and the Write Enable Latch (WEL) bit is cleared. If the Block is protected by BP bits (WPSEL=0; Block Protect Mode) or SPB/DPB (WPSEL=1; Advanced Sector Protect Mode), the Sector Erase (SE) instruction will not be executed on the block.

Figure 44. Sector Erase (SE) Sequence (SPI Mode)

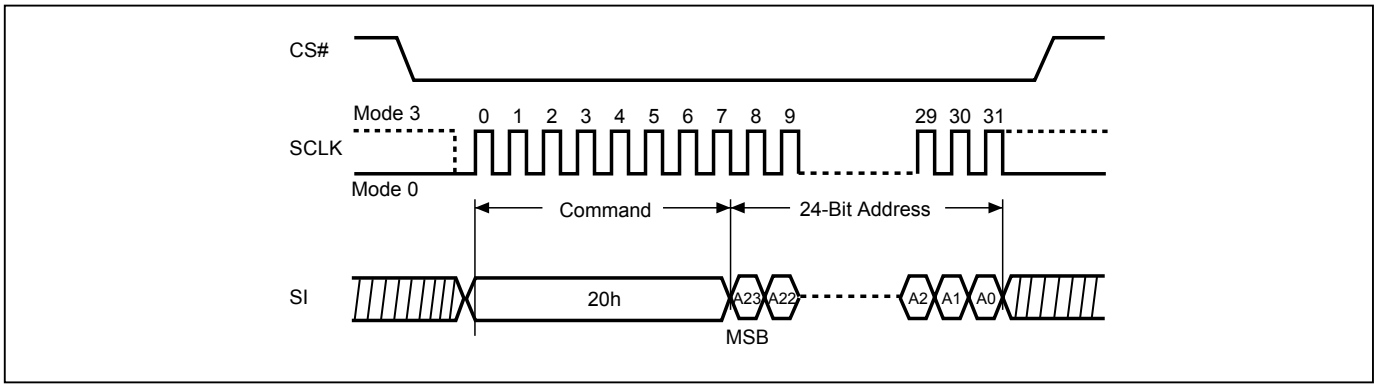

Figure 45. Sector Erase (SE) Sequence (QPI Mode)

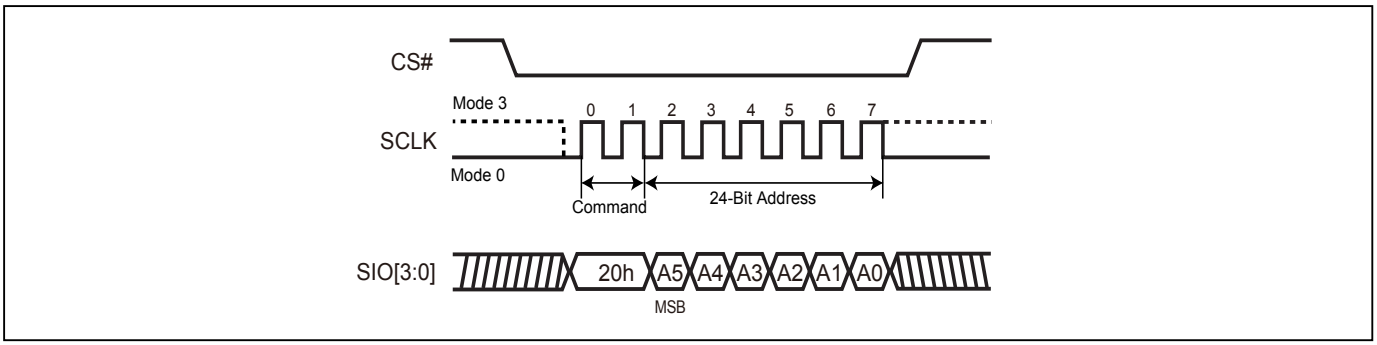

9-21. Block Erase (BE32K)

The Block Erase (BE32K) instruction is for erasing the data of the chosen block to be "1". The instruction is used for 32K-byte block erase operation. A Write Enable (WREN) instruction be executed to set the Write Enable Latch (WEL) bit before sending the Block Erase (BE32K). Any address of the block (see *Table 4. Memory Organization*) is a valid address for Block Erase (BE32K) instruction. The CS# must go high exactly at the byte boundary (the least significant bit of address byte been latched-in); otherwise, the instruction will be rejected and not executed.

The sequence of issuing BE32K instruction is: CS# goes low→ sending BE32K instruction code→ 3-byte address on SI→CS# goes high.

Both SPI (8 clocks) and QPI (2 clocks) command cycle can accept by this instruction. The SIO[3:1] are don't care when during SPI mode.

The self-timed Block Erase Cycle time (tBE32K) is initiated as soon as Chip Select (CS#) goes high. The Write in Progress (WIP) bit still can be checked while during the Block Erase cycle is in progress. The WIP sets during the tBE32K timing, and clears when Block Erase Cycle is completed, and the Write Enable Latch (WEL) bit is cleared. If the Block is protected by BP bits (WPSEL=0; Block Protect Mode) or SPB/DPB (WPSEL=1; Advanced Sector Protect Mode), the Block Erase (BE32K) instruction will not be executed on the block.

Figure 46. Block Erase 32KB (BE32K) Sequence (SPI Mode)

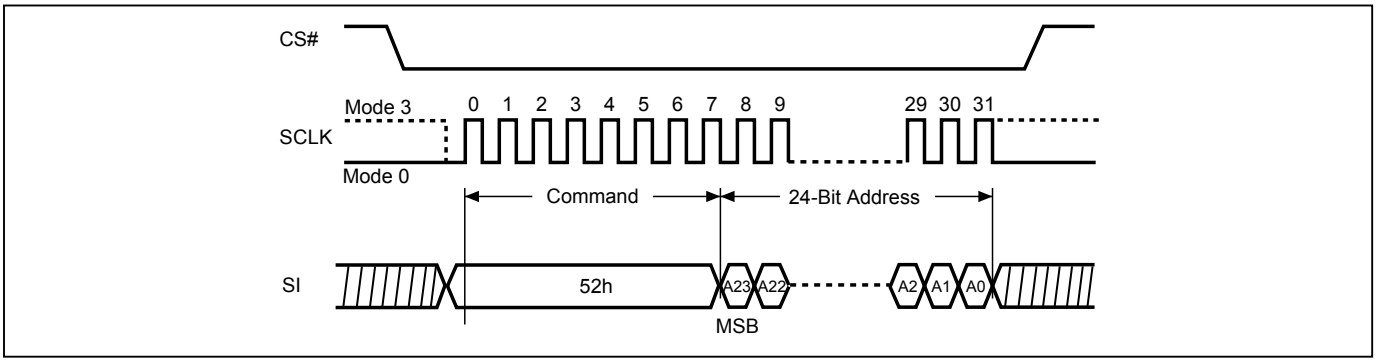

Figure 47. Block Erase 32KB (BE32K) Sequence (QPI Mode)

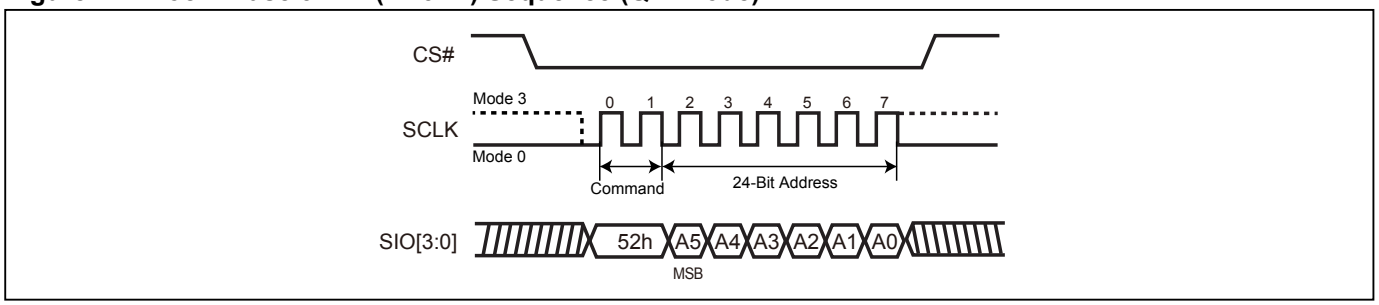

9-22. Block Erase (BE)

The Block Erase (BE) instruction is for erasing the data of the chosen block to be "1". The instruction is used for 64K-byte block erase operation. A Write Enable (WREN) instruction must be executed to set the Write Enable Latch (WEL) bit before sending the Block Erase (BE). Any address of the block (Please refer to *Table 4. Memory Organization*) is a valid address for Block Erase (BE) instruction. The CS# must go high exactly at the byte boundary (the least significant bit of address byte been latched-in); otherwise, the instruction will be rejected and not executed.

The sequence of issuing BE instruction is: CS# goes low→ sending BE instruction code→ 3-byte address on SI→ CS# goes high.

Both SPI (8 clocks) and QPI (2 clocks) command cycle can accept by this instruction. The SIO[3:1] are don't care when during SPI mode.

The self-timed Block Erase Cycle time (tBE) is initiated as soon as Chip Select (CS#) goes high. The Write in Progress (WIP) bit still can be checked while the Block Erase cycle is in progress. The WIP sets during the tBE timing, and clears when Block Erase Cycle is completed, and the Write Enable Latch (WEL) bit is reset. If the Block is protected by BP bits (WPSEL=0; Block Protect Mode) or SPB/DPB (WPSEL=1; Advanced Sector Protect Mode), the Block Erase (BE) instruction will not be executed on the block.

Figure 48. Block Erase (BE) Sequence (SPI Mode)

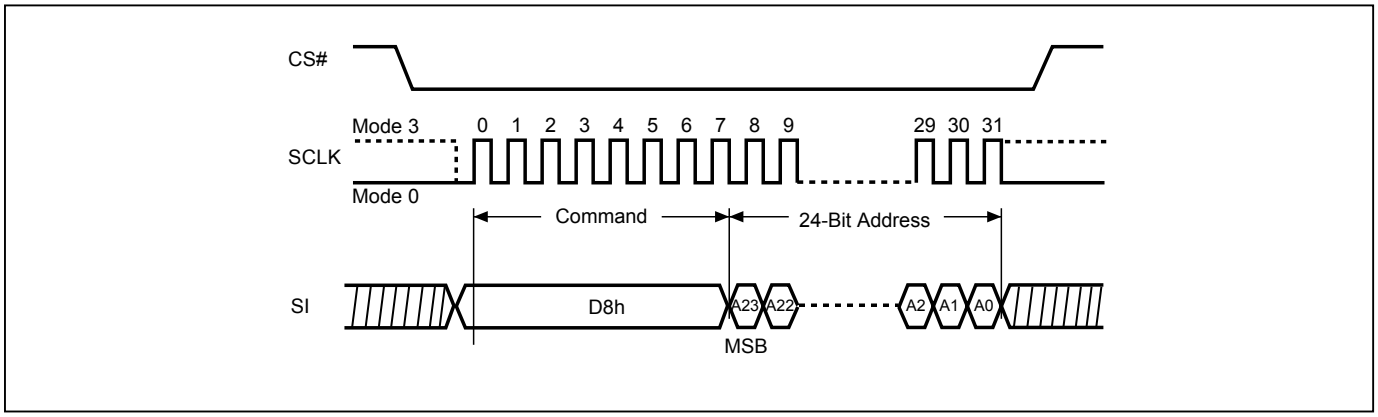

Figure 49. Block Erase (BE) Sequence (QPI Mode)

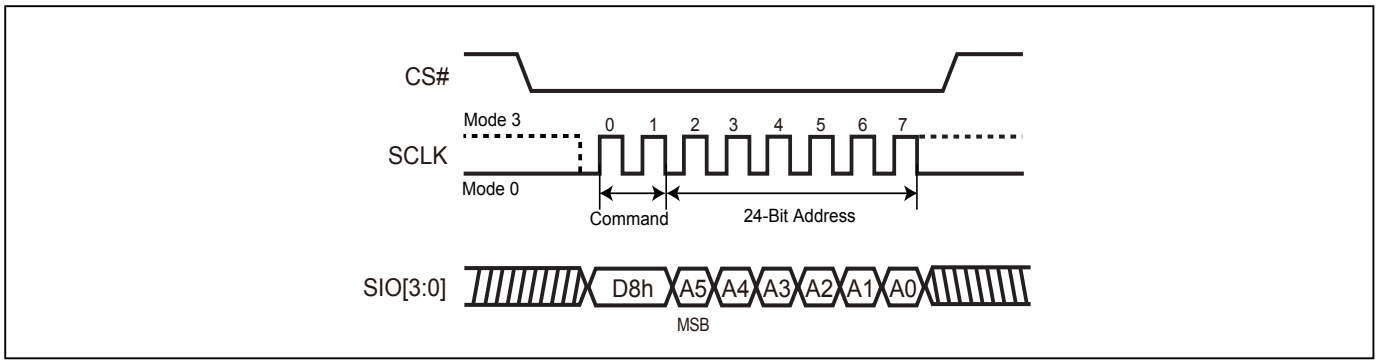

9-23. Chip Erase (CE)

The Chip Erase (CE) instruction is for erasing the data of the whole chip to be "1". A Write Enable (WREN) instruction must be executed to set the Write Enable Latch (WEL) bit before sending the Chip Erase (CE). The CS# must go high exactly at the byte boundary, otherwise the instruction will be rejected and not executed.

The sequence of issuing CE instruction is: CS# goes low→sending CE instruction code→CS# goes high.

Both SPI (8 clocks) and QPI (2 clocks) command cycle can accept by this instruction. The SIO[3:1] are don't care when during SPI mode.

The self-timed Chip Erase Cycle time (tCE) is initiated as soon as Chip Select (CS#) goes high. The Write in Progress (WIP) bit still can be checked while the Chip Erase cycle is in progress. The WIP sets during the tCE timing, and clears when Chip Erase Cycle is completed, and the Write Enable Latch (WEL) bit is cleared.

When the chip is under "Block protect (BP) Mode" (WPSEL=0). The Chip Erase(CE) instruction will not be executed, if one (or more) sector is protected by BP3-BP0 bits. It will be only executed when BP3-BP0 all set to "0".

When the chip is under "Advances Sector Protect Mode" (WPSEL=1). The Chip Erase (CE) instruction will be executed on unprotected block. The protected Block will be skipped. If one (or more) 4K byte sector was protected in top or bottom 64K byte block, the protected block will also skip the chip erase command.

Figure 50. Chip Erase (CE) Sequence (SPI Mode)

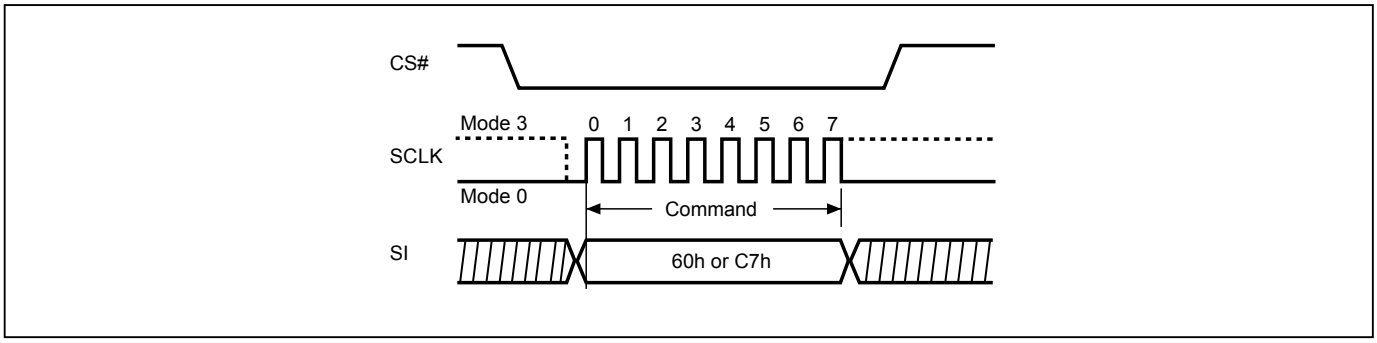

Figure 51. Chip Erase (CE) Sequence (QPI Mode)

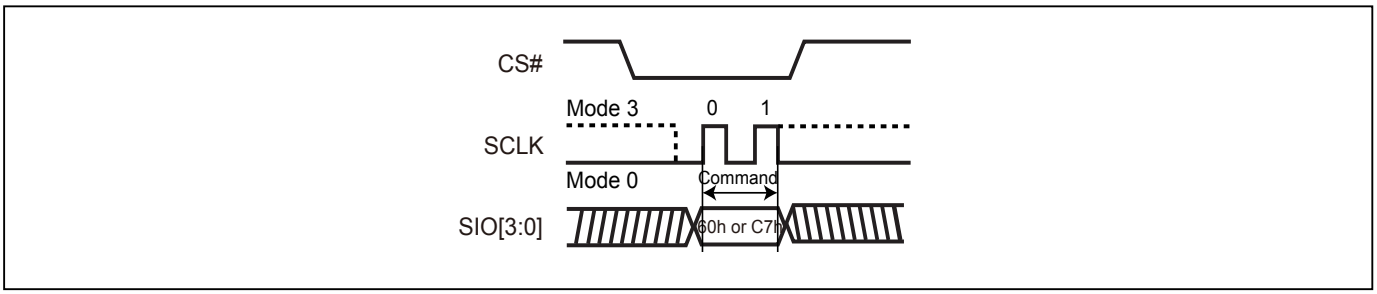

9-24. Page Program (PP)

The Page Program (PP) instruction is for programming the memory to be "0". A Write Enable (WREN) instruction must be executed to set the Write Enable Latch (WEL) bit before sending the Page Program (PP). The device programs only the last 256 data bytes sent to the device. If the entire 256 data bytes are going to be programmed, A7-A0 (The eight least significant address bits) should be set to 0. The last address byte (the 8 least significant address bits, A7-A0) should be set to 0 for 256 bytes page program. If A7-A0 are not all zero, transmitted data that exceed page length are programmed from the starting address (24-bit address that last 8 bit are all 0) of currently selected page. If the data bytes sent to the device exceeds 256, the last 256 data byte is programmed at the request page and previous data will be disregarded. If the data bytes sent to the device has not exceeded 256, the data will be programmed at the request address of the page. There will be no effort on the other data bytes of the same page.

The sequence of issuing PP instruction is: CS# goes low→ sending PP instruction code→ 3-byte address on SI→ at least 1-byte on data on SI→ CS# goes high.

The CS# must be kept to low during the whole Page Program cycle; The CS# must go high exactly at the byte boundary(the latest eighth bit of data being latched in), otherwise the instruction will be rejected and will not be executed.

The self-timed Page Program Cycle time (tPP) is initiated as soon as Chip Select (CS#) goes high. The Write in Progress (WIP) bit still can be checked while the Page Program cycle is in progress. The WIP sets during the tPP timing, and clears when Page Program Cycle is completed, and the Write Enable Latch (WEL) bit is cleared. If the Block is protected by BP bits (WPSEL=0; Block Protect Mode) or SPB/DPB (WPSEL=1; Advanced Sector Protect Mode) the Page Program (PP) instruction will not be executed.

Both SPI (8 clocks) and QPI (2 clocks) command cycle can accept by this instruction. The SIO[3:1] are don't care when during SPI mode.

Figure 52. Page Program (PP) Sequence (SPI Mode)

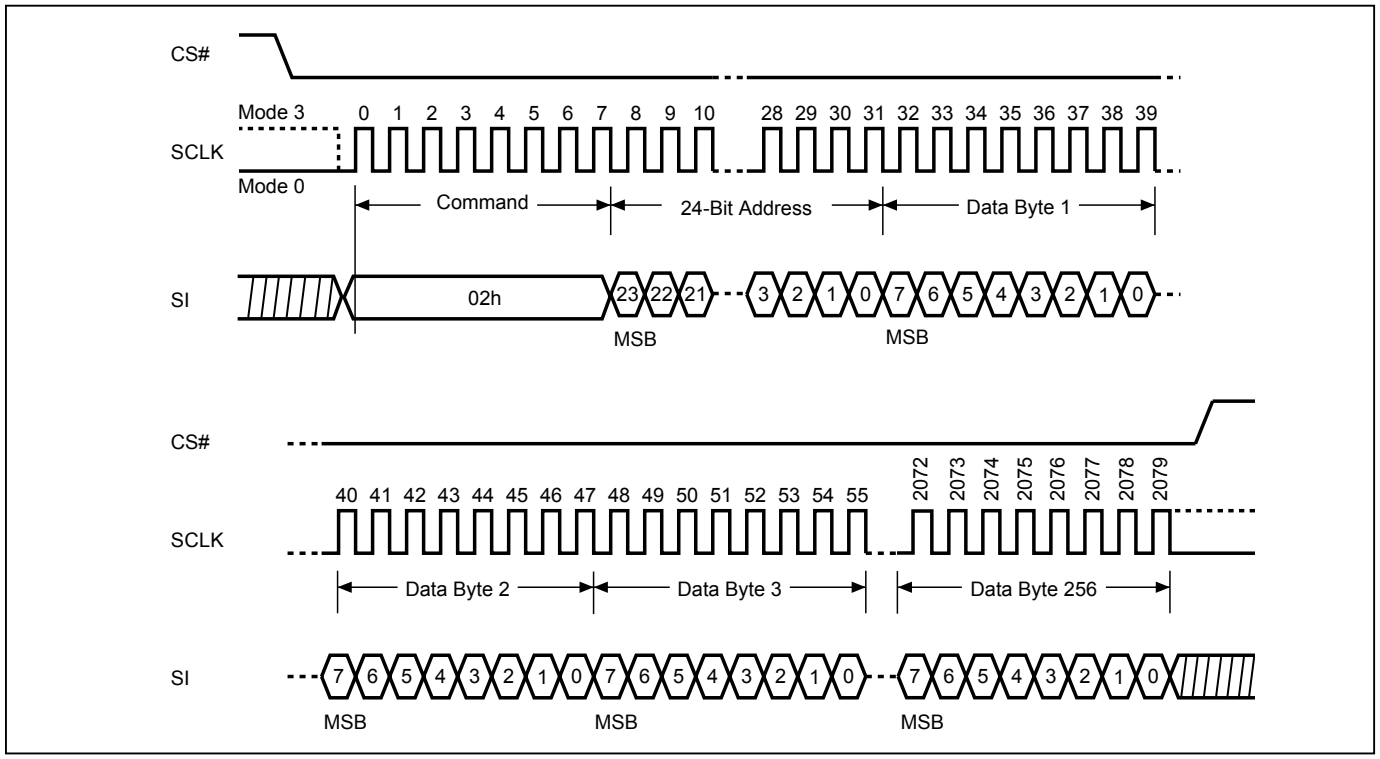

Figure 53. Page Program (PP) Sequence (QPI Mode)

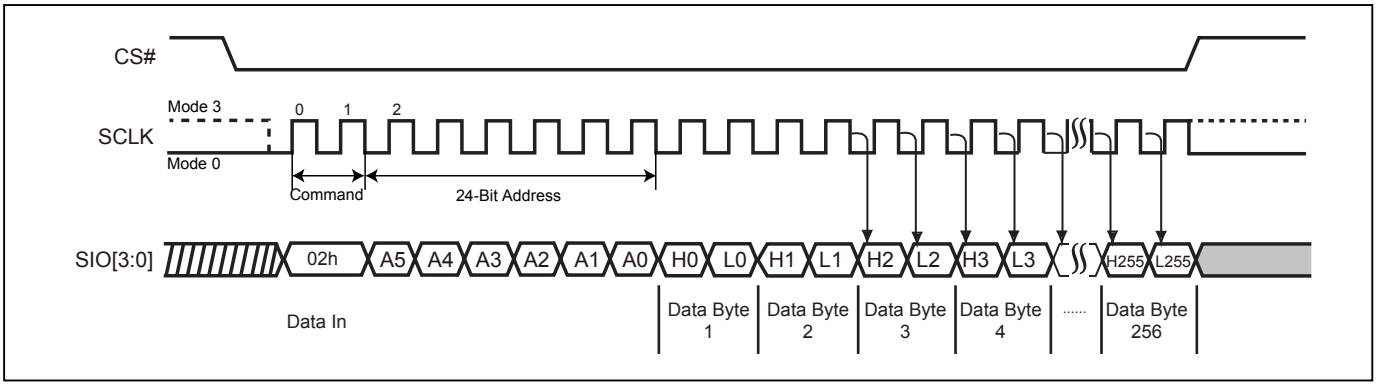

9-25. 4 x I/O Page Program (4PP)

The Quad Page Program (4PP) instruction is for programming the memory to be "0". A Write Enable (WREN) instruction must be executed to set the Write Enable Latch (WEL) bit and Quad Enable (QE) bit must be set to "1" before sending the Quad Page Program (4PP). The Quad Page Programming takes four pins: SIO0, SIO1, SIO2, and SIO3 as address and data input, which can improve programmer performance and the effectiveness of application. The other function descriptions are as same as standard page program.

The sequence of issuing 4PP instruction is: CS# goes low→ sending 4PP instruction code→ 3-byte address on SIO[3:0]→ at least 1-byte on data on SIO[3:0]→CS# goes high.

If the page is protected by BP bits (WPSEL=0; Block Protect Mode) or SPB/DPB (WPSEL=1; Advanced Sector Protect Mode), the Quad Page Program (4PP) instruction will not be executed.

Figure 54. 4 x I/O Page Program (4PP) Sequence (SPI Mode only)

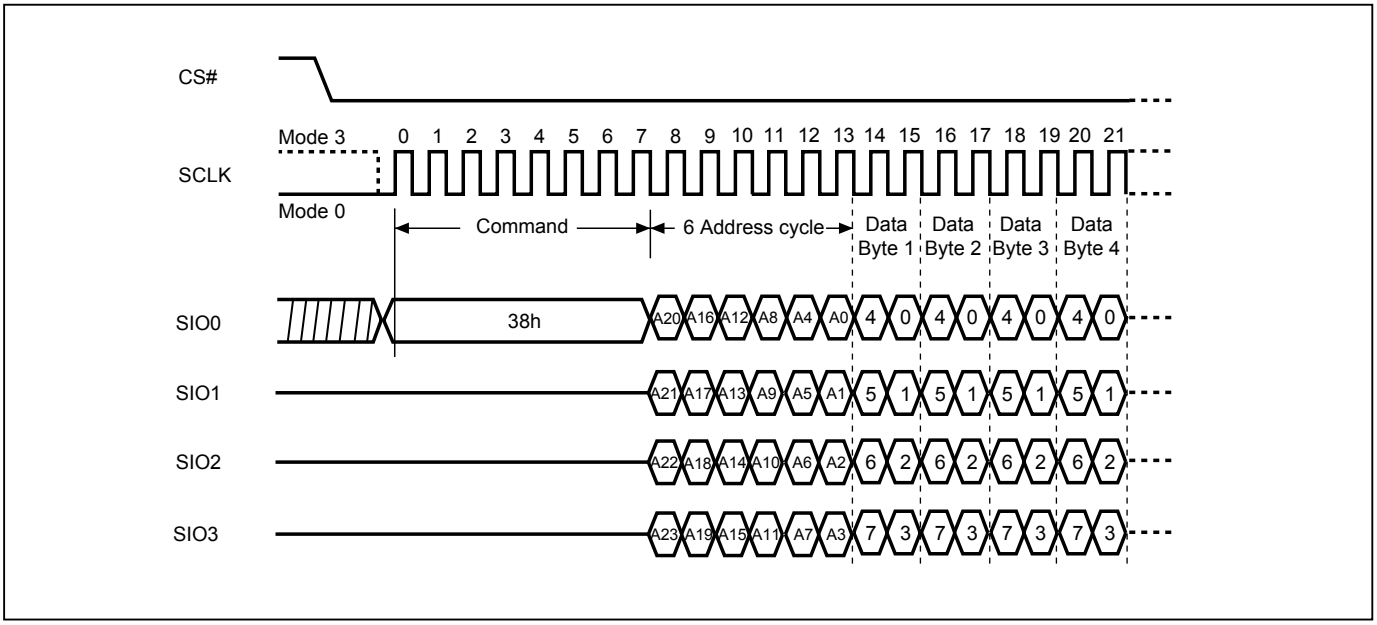

9-26. Deep Power-down (DP)

The Deep Power-down (DP) instruction is for setting the device to minimum power consumption (the standby current is reduced from ISB1 to ISB2). The Deep Power-down mode requires the Deep Power-down (DP) instruction to enter, during the Deep Power-down mode, the device is not active and all Write/Program/Erase instruction are ignored. When CS# goes high, it's only in deep power-down mode not standby mode. It's different from Standby mode.

The sequence of issuing DP instruction is: CS# goes low→sending DP instruction code→CS# goes high.

Both SPI (8 clocks) and QPI (2 clocks) command cycle can accept by this instruction. The SIO[3:1] are don't care when during SPI mode.

Once the DP instruction is set, all instruction will be ignored except the Release from Deep Power-down mode (RDP) and Read Electronic Signature (RES) instruction and softreset command. (those instructions allow the ID being reading out). When Power-down, or software reset command the deep power-down mode automatically stops, and when power-up, the device automatically is in standby mode. For DP instruction the CS# must go high exactly at the byte boundary (the latest eighth bit of instruction code been latched-in); otherwise, the instruction will not executed. As soon as Chip Select (CS#) goes high, a delay of tDP is required before entering the Deep Power-down mode.

Figure 55. Deep Power-down (DP) Sequence (SPI Mode)

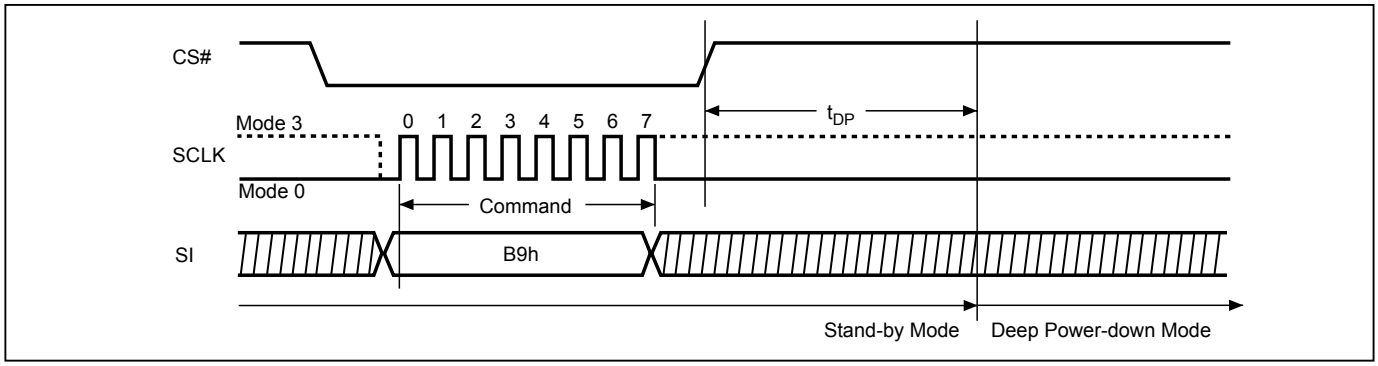

Figure 56. Deep Power-down (DP) Sequence (QPI Mode)

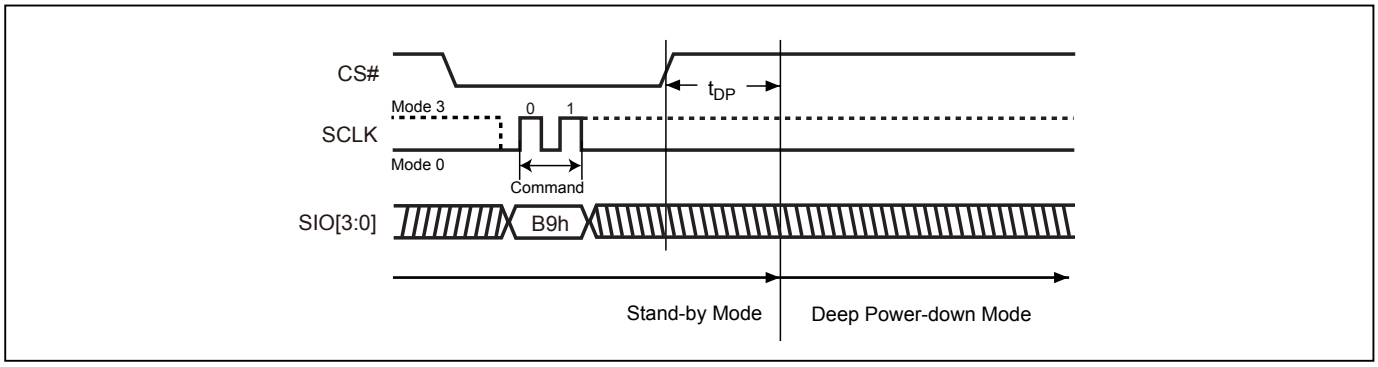

9-27. Enter Secured OTP (ENSO)

The ENSO instruction is for entering the additional 4K-bit secured OTP mode. While device is in 4K-bit secured OTPmode, main array access is not available. The additional 4K-bit secured OTP is independent from main array and may be used to store unique serial number for system identifier. After entering the Secured OTP mode, follow standard read or program procedure to read out the data or update data. The Secured OTP data cannot be updated again once it is lock-down.

The sequence of issuing ENSO instruction is: CS# goes low→ sending ENSO instruction to enter Secured OTP mode→ CS# goes high.

Both SPI (8 clocks) and QPI (2 clocks) command cycle can accept by this instruction. The SIO[3:1] are don't care when during SPI mode.

Please note that after issuing ENSO command user can only access secure OTP region with standard read or program procedure. Furthermore, once security OTP is lock down, only read related commands are valid.

9-28. Exit Secured OTP (EXSO)

The EXSO instruction is for exiting the additional 4K-bit secured OTP mode.

The sequence of issuing EXSO instruction is: CS# goes low→ sending EXSO instruction to exit Secured OTP mode→ CS# goes high.

Both SPI (8 clocks) and QPI (2 clocks) command cycle can accept by this instruction. The SIO[3:1] are don't care when during SPI mode.

9-29. Read Security Register (RDSCUR)

The RDSCUR instruction is for reading the value of Security Register bits. The Read Security Register can be read at any time (even in program/erase/write status register/write security register condition) and continuously.

The sequence of issuing RDSCUR instruction is : CS# goes low→sending RDSCUR instruction→Security Register data out on SO→ CS# goes high.

Both SPI (8 clocks) and QPI (2 clocks) command cycle can accept by this instruction. The SIO[3:1] are don't care when during SPI mode.

9-30. Write Security Register (WRSCUR)

The WRSCUR instruction is for changing the values of Security Register Bits. The WREN (Write Enable) instruction is required before issuing WRSCUR instruction. The WRSCUR instruction may change the values of bit1 (LDSO bit) for customer to lock-down the 4K-bit Secured OTP area. Once the LDSO bit is set to "1", the Secured OTP area cannot be updated any more.

The sequence of issuing WRSCUR instruction is :CS# goes low→ sending WRSCUR instruction → CS# goes high.

Both SPI (8 clocks) and QPI (2 clocks) command cycle can accept by this instruction. The SIO[3:1] are don't care when during SPI mode.

The CS# must go high exactly at the boundary; otherwise, the instruction will be rejected and not executed.

Security Register

The definition of the Security Register bits is as below:

Write Protection Selection bit. Please reference to *Write Protection Selection*

Erase Fail bit. The Erase Fail bit is a status flag, which shows the status of last Erase operation. It will be set to "1", if the erase operation fails. It will be set to "0", if the last operation is success. Please note that it will not interrupt or stop any operation in the flash memory.

Program Fail bit. The Program Fail bit is a status flag, which shows the status of last Program operation. It will be set to "1", if the program operation fails or the program region is protected. It will be set to "0", if the last operation is success. Please note that it will not interrupt or stop any operation in the flash memory.

Erase Suspend bit. Erase Suspend Bit (ESB) indicates the status of Erase Suspend operation. Users may use ESB to identify the state of flash memory. After the flash memory is suspended by Erase Suspend command, ESB is set to "1". ESB is cleared to "0" after erase operation resumes.

Program Suspend bit. Program Suspend Bit (PSB) indicates the status of Program Suspend operation. Users may use PSB to identify the state of flash memory. After the flash memory is suspended by Program Suspend command, PSB is set to "1". PSB is cleared to "0" after program operation resumes.

Secured OTP Indicator bit. The Secured OTP indicator bit shows the chip is locked by factory or not. When it is "0", it indicates non-factory lock; "1" indicates factory-lock.

Lock-down Secured OTP (LDSO) bit. By writing WRSCUR instruction, the LDSO bit may be set to "1" for customer lock-down purpose. However, once the bit is set to "1" (lock-down), the LDSO bit and the 4K-bit Secured OTP area cannot be updated any more. While it is in 4K-bit secured OTP mode, main array access is not allowed.

Table 9. Security Register Definition

bit7	bit6	bit5	bit4	bit3	bit2	bit1	bit0
WPSEL	E_FAIL	P_FAIL	Reserved	ESB (Erase Suspend bit)	PSB (Program Suspend bit)	LDSO (indicate if lock-down)	Secured OTP indicator bit
0=normal WP mode 1=individual mode (default=0)	0=normal Erase succeed 1=indicate Erase failed (default=0)	0=normal Program succeed 1=indicate Program failed (default=0)	-	0=Erase is not suspended 1= Erase suspended (default=0)	0=Program is not suspended 1= Program suspended (default=0)	0 = not lock-down 1 = lock-down (cannot program/ erase OTP)	0 = non-factory lock 1 = factory lock
Non-volatile bit (OTP)	Volatile bit	Volatile bit	Volatile bit	Volatile bit	Volatile bit	Non-volatile bit (OTP)	Non-volatile bit (OTP)

9-31. Write Protection Selection (WPSEL)

There are two write protection methods provided on this device, (1) Block Protection (BP) mode or (2) Advanced Sector Protection mode. The protection modes are mutually exclusive. The WPSEL bit selects which protection mode is enabled. If WPSEL=0 (factory default), BP mode is enabled and Advanced Sector Protection mode is disabled. If WPSEL=1, Advanced Sector Protection mode is enabled and BP mode is disabled. The WPSEL command is used to set WPSEL=1. A WREN command must be executed to set the WEL bit before sending the WPSEL command. **Please note that the WPSEL bit is an OTP bit. Once WPSEL is set to "1", it cannot be programmed back to "0".**

When WPSEL = 0: Block Protection (BP) mode,
The memory array is write protected by the BP3~BP0 bits.

When WPSEL =1: Advanced Sector Protection mode,
Blocks are individually protected by their own SPB or DPB. On power-up, all blocks are write protected by the Dynamic Protection Bits (DPB) by default. The Advanced Sector Protection instructions WRLR, RDLR, WRPASS, RDPASS, PASSULK, WRSPB, ESSPB, SPBLK, RDSPBLK, WRDPB, RDDPB, GBLK, and GBULK are activated. The BP3~BP0 bits of the Status Register are disabled and have no effect. Hardware protection is performed by driving WP#=0. Once WP#=0 all blocks and sectors are write protected regardless of the state of each SPB or DPB.

The sequence of issuing WPSEL instruction is: CS# goes low → send WPSEL instruction to enable the Advanced Sector Protect mode → CS# goes high.

Write Protection Selection

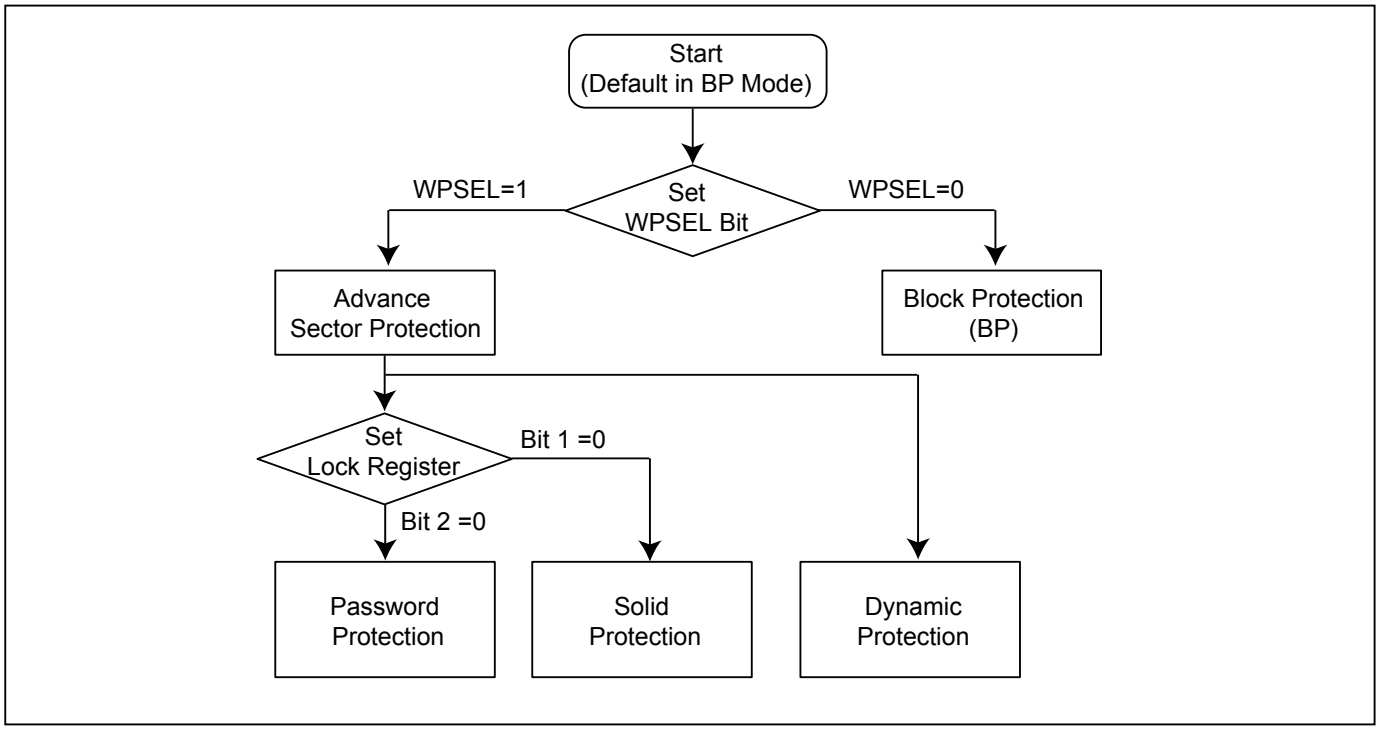

Figure 57. WPSEL Flow

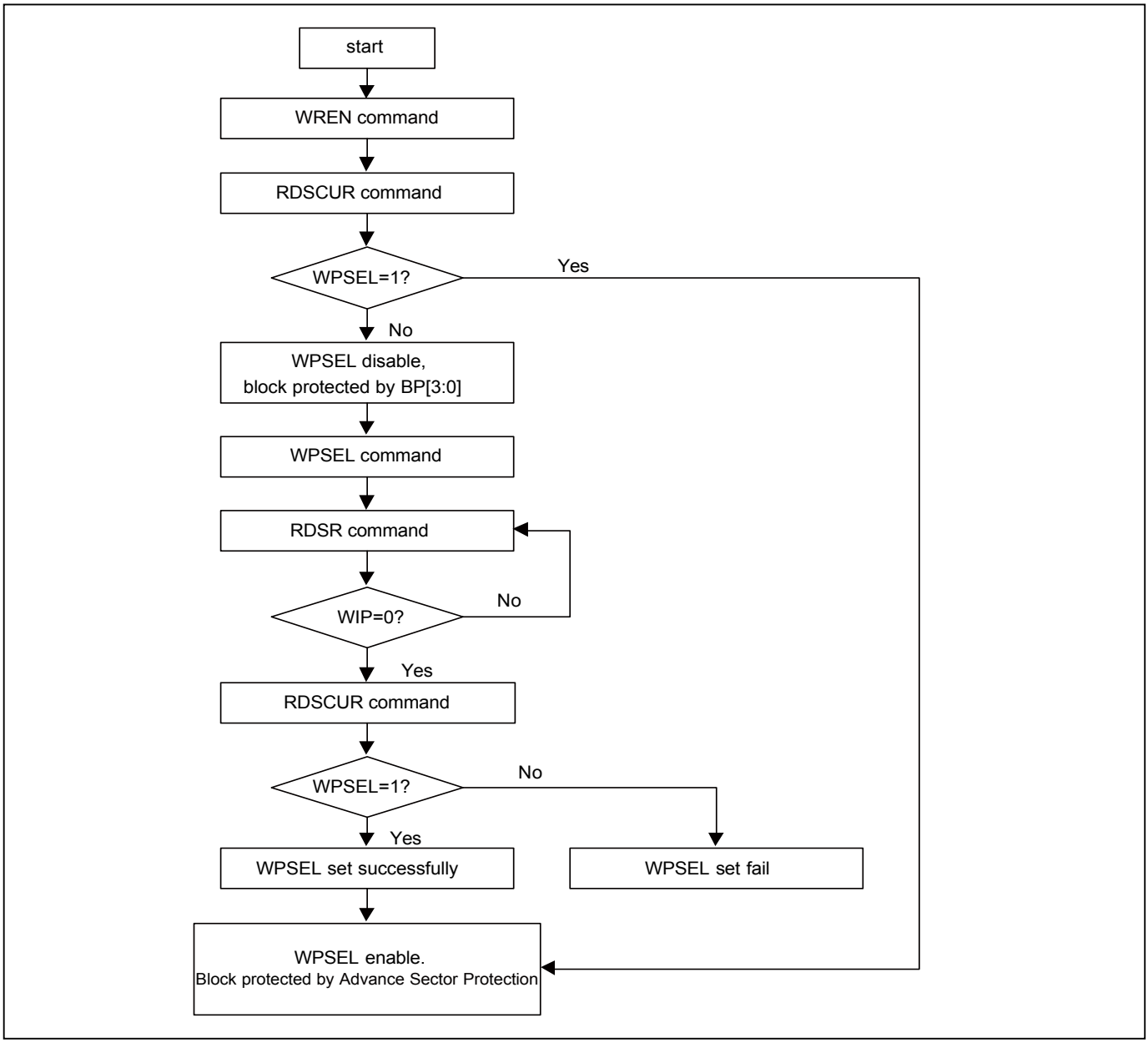

9-32. Advanced Sector Protection

Advanced Sector Protection can protect individual 4KB sectors in the bottom and top 64KB of memory and protect individual 64KB blocks in the rest of memory.

There is one non-volatile Solid Protection Bit (SPB) and one volatile Dynamic Protection Bit (DPB) assigned to each 4KB sector at the bottom and top 64KB of memory and to each 64KB block in the rest of memory. A sector or block is write-protected from programming or erasing when its associated SPB or DPB is set to “1”. The Unprotect Solid Protect Bit (USPB) can temporarily override and disable the write-protection provided by the SPB bits.

There are two mutually exclusive implementations of Advanced Sector Protection: Solid Protection mode (factory default) and Password Protection mode. Solid Protection mode permits the SPB bits to be modified after power-on or a reset. The Password Protection mode requires a valid password before allowing the SPB bits to be modified. The figure below is an overview of Advanced Sector Protection.

Figure 58. Advanced Sector Protection Overview

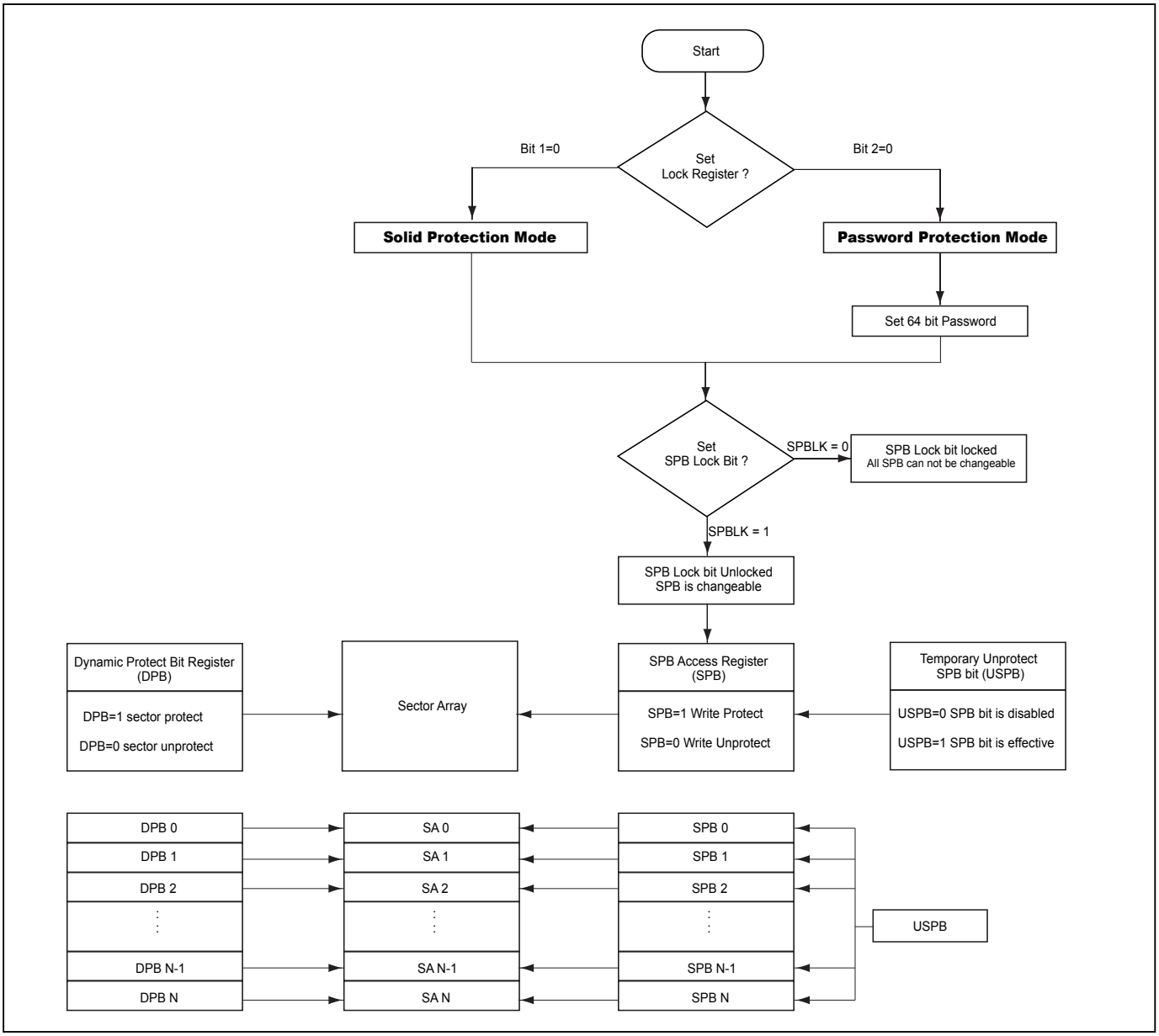

9-32-1. Lock Register

The Lock Register is a 16-bit one-time programmable register. Lock Register bits [2:1] select between Solid Protection mode and Password Protection mode. When both bits are “1” (factory default), Solid Protection mode is enabled by default. The Lock Register is programmed using the WRLR (Write Lock Register) command. Programming Lock Register bit 1 to “0” permanently selects Solid Protection mode and permanently disables Password Protection mode. Conversely, programming bit 2 to “0” permanently selects Password Protection mode and permanently disables Solid Protection mode. Bits 1 and 2 cannot be programmed to “0” at the same time otherwise the device will abort the operation. A WREN command must be executed to set the WEL bit before sending the WRLR command.

A password must be set prior to selecting Password Protection mode. The password can be set by issuing the WRPASS command.

Lock Register

Bit 15-3	Bit 2	Bit 1	Bit0
Reserved	Password Protection Mode Lock Bit	Solid Protection Mode Lock Bit	Reserved
x	0=Password Protection Mode Enable 1= Password Protection Mode not enable (Default =1)	0=Solid Protection Mode Enable 1= Solid Protection Mode not enable (Default =1)	x
OTP	OTP	OTP	OTP

Note: Once bit 2 or bit 1 has been programmed to "0", the other bit can't be changed any more. Attempts to clear more than one bit in the Lock Register will set the Security Register P_FAIL flag to "1".

Figure 59. Read Lock Register (RDLR) Sequence

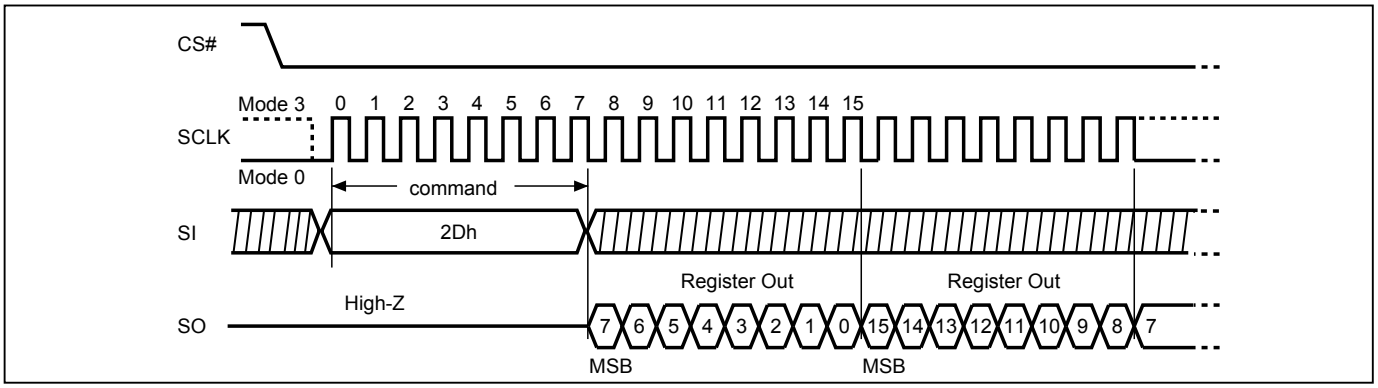

Figure 60. Write Lock Register (WRLR) Sequence (SPI Mode)

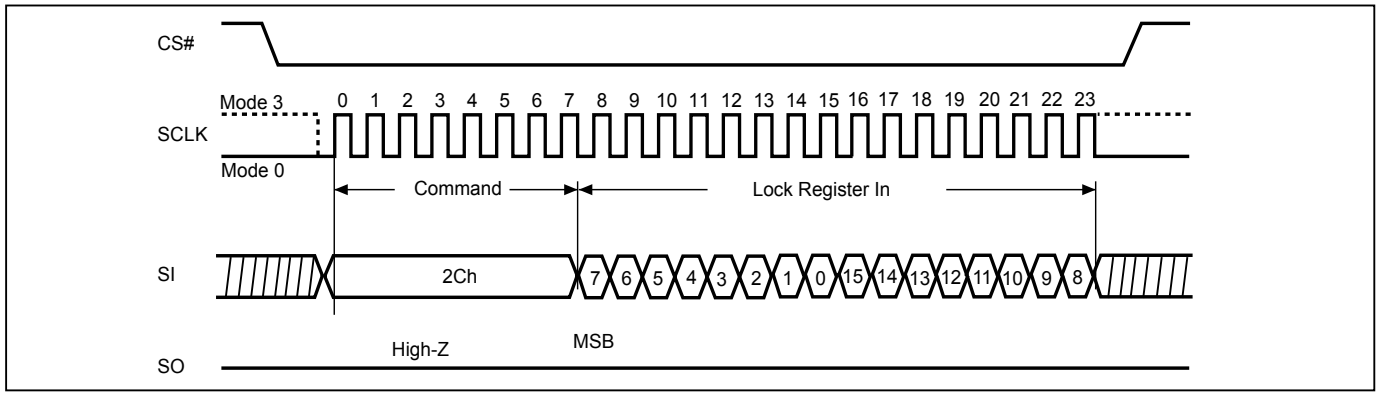

9-32-2. SPB Lock Bit (SPBLK)

The SPB Lock Bit (SPBLK) is a volatile bit located in bit 0 of the SPB Lock Register. The SPBLK bit controls whether the SPB bits can be modified or not. If SPBLK=1, the SPB bits are unprotected and can be modified. If SPBLK=0, the SPB bits are protected ("locked") and cannot be modified. The power-on and reset status of the SPBLK bit is determined by Lock Register bits [2:1]. Refer to *SPB Lock Register* for SPBLK bit default power-on status. The RDSPBLK command can be used to read the SPB Lock Register to determine the state of the SPBLK bit.

In Solid Protection mode, the SPBLK bit defaults to "1" after power-on or reset. When SPBLK=1, the SPB bits are unprotected ("unlocked") and can be modified. The SPB Lock Bit Set command can be used to write the SPBLK bit to "0" and protect the SPB bits. A WREN command must be executed to set the WEL bit before sending the SPB Lock Bit Set command. Once the SPBLK has been written to "0", there is no command (except a software reset) to set the bit back to "1". A power-on cycle or reset is required to set the SPB lock bit back to "1".

In Password Protection mode, the SPBLK bit defaults to "0" after power-on or reset. A valid password must be provided to set the SPBLK bit to "1" to allow the SPBs to be modified. After the SPBs have been set to the desired status, use the SPB Lock Bit Set command to clear the SPBLK bit back to "0" in order to prevent further modification.

SPB Lock Register

Bit	Description	Bit Status	Default	Type
7-1	Reserved	X	0000000	Volatile
0	SPBLK (SPB Lock Bit)	0 = SPBs protected 1= SPBs unprotected	Solid Protection Mode: 1 Password Protection Mode: 0	Volatile

Figure 61. SPB Lock Bit Set (SPBLK) Sequence

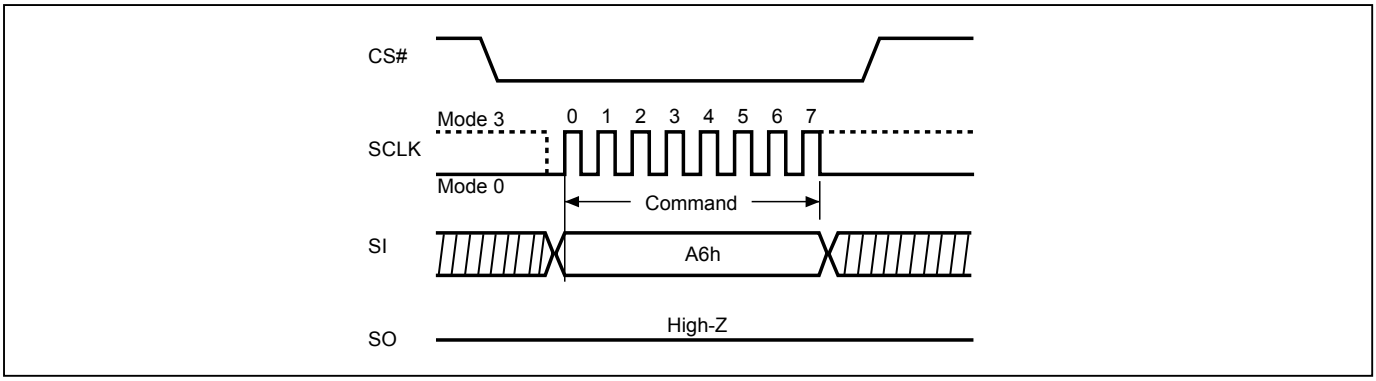

Figure 62. Read SPB Lock Register (RDSPBLK) Sequence

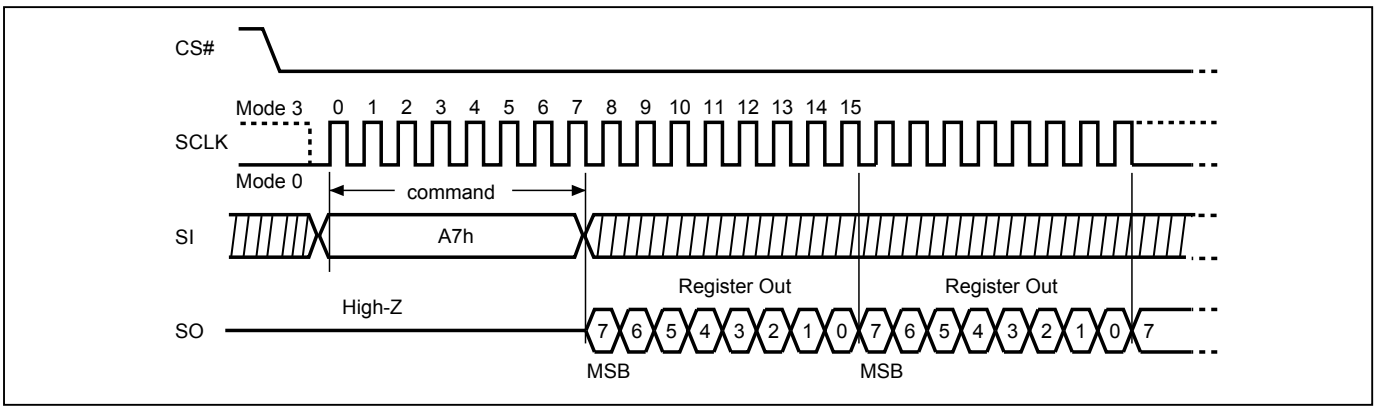

9-32-3. Solid Protection Bits

The Solid Protection Bits (SPBs) are nonvolatile bits for enabling or disabling write-protection to sectors and blocks. The SPB bits have the same endurance as the Flash memory. An SPB is assigned to each 4KB sector in the bottom and top 64KB of memory and to each 64KB block in the remaining memory. The factory default state of the SPB bits is "0", which has the sector/block write-protection disabled.

When an SPB is set to "1", the associated sector or block is write-protected. Program and erase operations on the sector or block will be inhibited. SPBs can be individually set to "1" by the WRSPB command. However, the SPBs cannot be individually cleared to "0". Issuing the ESSPB command clears all SPBs to "0". A WREN command must be executed to set the WEL bit before sending the WRSPB or ESSPB command.

The SPBLK bit must be "1" before any SPB can be modified. In Solid Protection mode the SPBLK bit defaults to "1" after power-on or reset. Under Password Protection mode, the SPBLK bit defaults to "0" after power-on or reset, and a PASSULK command with a correct password is required to set the SPBLK bit to "1".

The SPB Lock Bit Set command clears the SPBLK bit to "0", locking the SPB bits from further modification.

The RDSPB command reads the status of the SPB of a sector or block. The RDSPB command returns 00h if the SPB is "0", indicating write-protection is disabled. The RDSPB command returns FFh if the SPB is "1", indicating write-protection is enabled.

In Solid Protection mode, the Unprotect Solid Protect Bit (USPB) can temporarily mask the SPB bits and disable the write-protection provided by the SPB bits.

Note: If SPBLK=0, commands to set or clear the SPB bits will be ignored.

SPB Register

Bit	Description	Bit Status	Default	Type
7 to 0	SPB (Solid Protection Bit)	00h = Unprotect Sector / Block FFh = Protect Sector / Block	00h	Non-volatile

Figure 63. Read SPB Status (RDSPB) Sequence

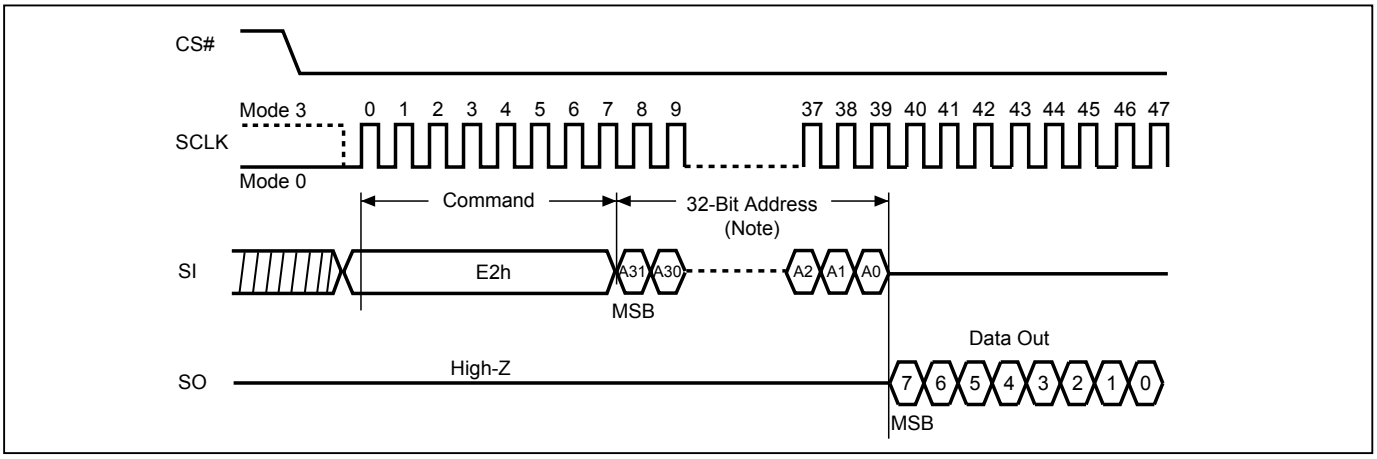

Note: One dummy byte follow 3-byte address.

Figure 64. SPB Erase (ESSPB) Sequence

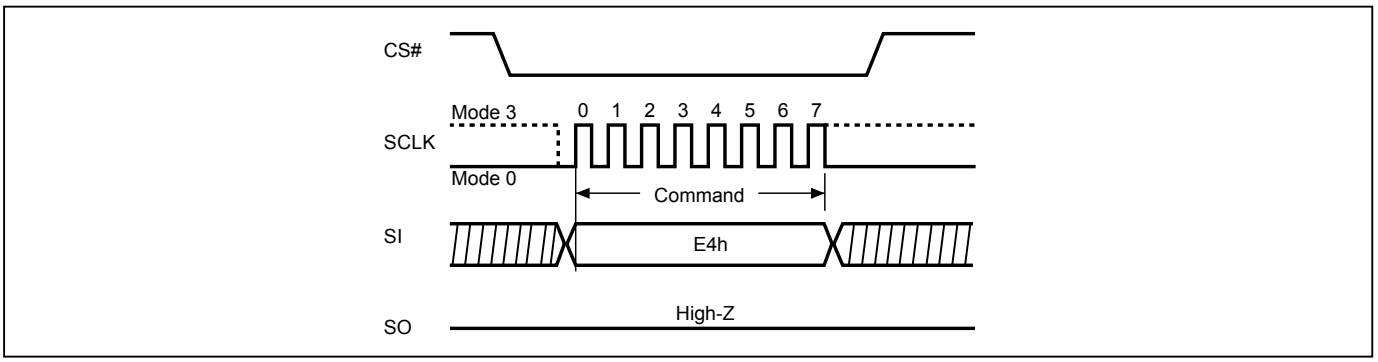

Figure 65. SPB Program (WRSPB) Sequence

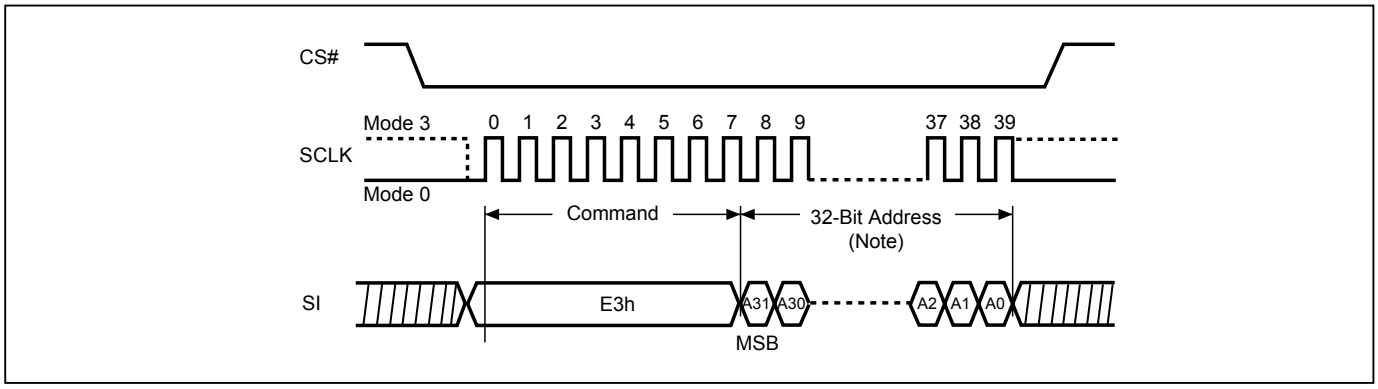

Note: One dummy byte follow 3-byte address.

9-32-4. Dynamic Protection Bits

The Dynamic Protection Bits (DPBs) are volatile bits for quickly and easily enabling or disabling write-protection to sectors and blocks. A DPB is assigned to each 4KB sector in the bottom and top 64KB of memory and to each 64KB block in the rest of the memory. The DBPs can enable write-protection on a sector or block regardless of the state of the corresponding SPB. However, the DPB bits can only unprotect sectors or blocks whose SPB bits are "0" (unprotected).

When a DPB is "1", the associated sector or block will be write-protected, preventing any program or erase operation on the sector or block. All DPBs default to "1" after power-on or reset. When a DPB is cleared to "0", the associated sector or block will be unprotected if the corresponding SPB is also "0".

DPB bits can be individually set to "1" or "0" by the WRDPB command. The DBP bits can also be globally cleared to "0" with the GBULK command or globally set to "1" with the GBLK command. A WREN command must be executed to set the WEL bit before sending the WRDPB, GBULK, or GBLK command.

The RDDPB command reads the status of the DPB of a sector or block. The RDDPB command returns 00h if the DPB is "0", indicating write-protection is disabled. The RDDPB command returns FFh if the DPB is "1", indicating write-protection is enabled.

DPB Register

Bit	Description	Bit Status	Default	Type
7 to 0	DPB (Dynamic Protection Bit)	00h = Unprotect Sector / Block FFh = Protect Sector / Block	FFh	Volatile

Figure 66. Read DPB Register (RDDPB) Sequence

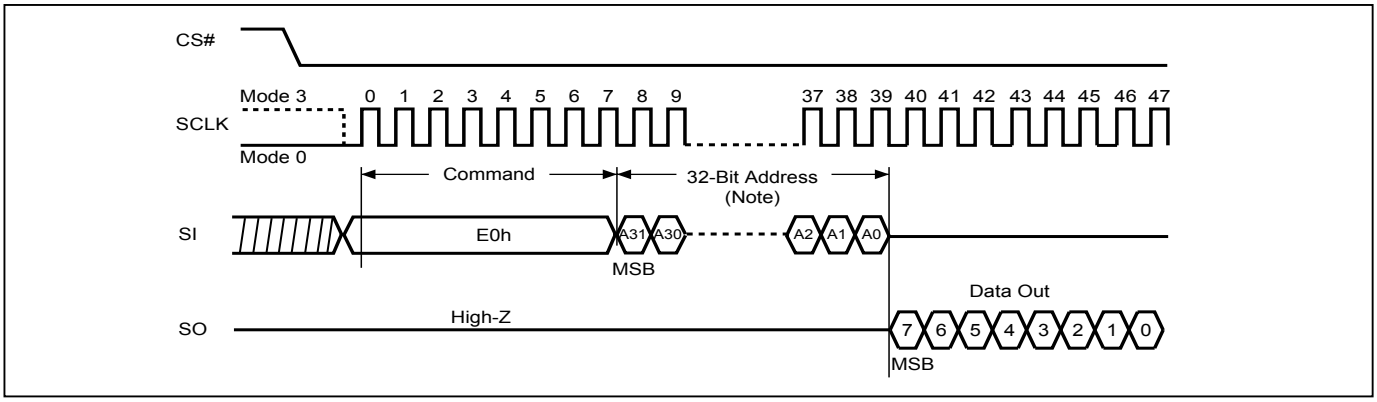

Note: One dummy byte follow 3-byte address.

Figure 67. Write DPB Register (WRDPB) Sequence

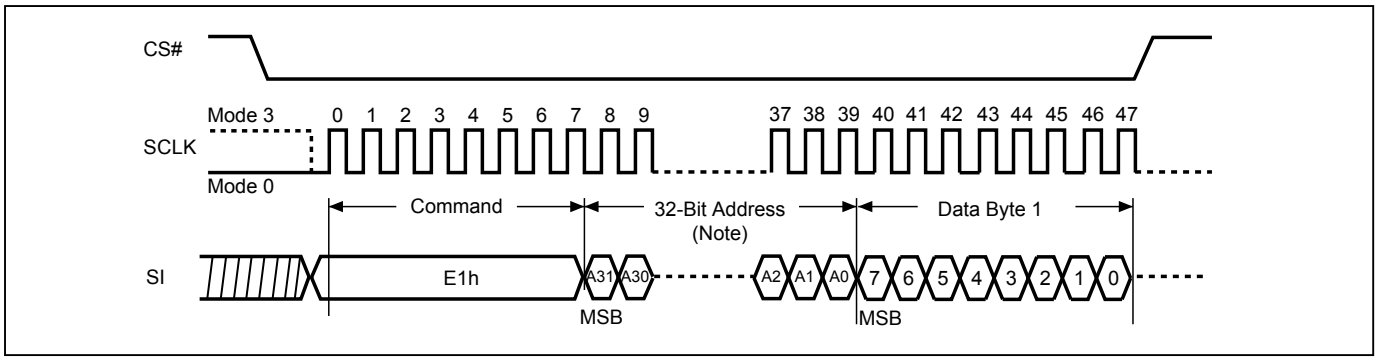

Note: One dummy byte follow 3-byte address.

9-32-5. Unprotect Solid Protect Bit (USPB)

The Unprotect Solid Protect Bit is a volatile bit that defaults to "1" after power-on or reset. When USPB=1, the SPBs have their normal function. When USPB=0 all SPBs are masked and their write-protected sectors and blocks are temporarily unprotected (as long as their corresponding DPBs are "0"). The USPB provides a means to temporarily override the SPBs without having to issue the ESSPB and WRSPB commands to clear and set the SPBs. The USPB can be set or cleared as often as needed.

Please refer to *9-32-7. Sector Protection States Summary Table* for the sector state with the protection status of DPB/SPB/USPB bits.

9-32-6. Gang Block Lock/Unlock (GBLK/GBULK)

These instructions are only effective if WPSEL=1. The GBLK and GBULK instructions provide a quick method to set or clear all DPB bits at once.

The WREN (Write Enable) instruction is required before issuing the GBLK/GBULK instruction.
The sequence of issuing GBLK/GBULK instruction is: CS# goes low → send GBLK/GBULK (7Eh/98h) instruction →CS# goes high.

The GBLK and GBULK commands are accepted in both SPI and QPI mode.

The CS# must go high exactly at the byte boundary, otherwise, the instruction will be rejected and not be executed.

9-32-7. Sector Protection States Summary Table

Protection Status			Sector/Block Protection State
DPB	SPB	USPB	
0	0	0	Unprotected
0	0	1	Unprotected
0	1	0	Unprotected
0	1	1	Protected
1	0	0	Protected
1	0	1	Protected
1	1	0	Protected
1	1	1	Protected

9-33. Password Protection Mode

Password Protection mode potentially provides a higher level of security than Solid Protection mode. In Password Protection mode, the SPBLK bit defaults to “0” after a power-on cycle or reset. When SPBLK=0, the SPBs are locked and cannot be modified. A 64-bit password must be provided to unlock the SPBs.

The PASSULK command with the correct password will set the SPBLK bit to “1” and unlock the SPB bits. After the correct password is given, a wait of 2us is necessary for the SPB bits to unlock. The Status Register WIP bit will clear to “0” upon completion of the PASSULK command. Once unlocked, the SPB bits can be modified. A WREN command must be executed to set the WEL bit before sending the PASSULK command.

Several steps are required to place the device in Password Protection mode. Prior to entering the Password Protection mode, it is necessary to set the 64-bit password and verify it. The WRPASS command writes the password and the RDPASS command reads back the password. Password verification is permitted until the Password Protection Mode Lock Bit has been written to “0”. Password Protection mode is activated by programming the Password Protection Mode Lock Bit to “0”. This operation is not reversible. Once the bit is programmed, it cannot be erased. The device remains permanently in Password Protection mode and the 64-bit password can neither be retrieved nor reprogrammed..

The password is all “1’s” when shipped from the factory. The WRPASS command can only program password bits to “0”. The WRPASS command cannot program “0’s” back to “1’s”. All 64-bit password combinations are valid password options. A WREN command must be executed to set the WEL bit before sending the WRPASS command.

- The unlock operation will fail if the password provided by the PASSULK command does not match the stored password. This will set the P_ERR bit to “1” and insert a 100us ± 20us delay before clearing the WIP bit to “0”.
- The PASSULK command is prohibited from being executed faster than once every 100us ± 20us. This restriction makes it impractical to attempt all combinations of a 64-bit password (such an effort would take ~58 million years). Monitor the WIP bit to determine whether the device has completed the PASSULK command.
- When a valid password is provided, the PASSULK command does not insert the 100us delay before returning the WIP bit to zero. The SPBLK bit will set to “1” and the P_ERR bit will be “0”.
- It is not possible to set the SPBLK bit to “1” if the password had not been set prior to the Password Protection mode being selected.

Password Register (PASS)

Bits	Field Name	Function	Type	Default State	Description
63 to 0	PWD	Hidden Password	OTP	FFFFFFFFFFFFFFFFh	Non-volatile OTP storage of 64 bit password. The password is no longer readable after the Password Protection mode is selected by programming Lock Register bit 2 to zero.

Figure 68. Read Password Register (RDPASS) Sequence

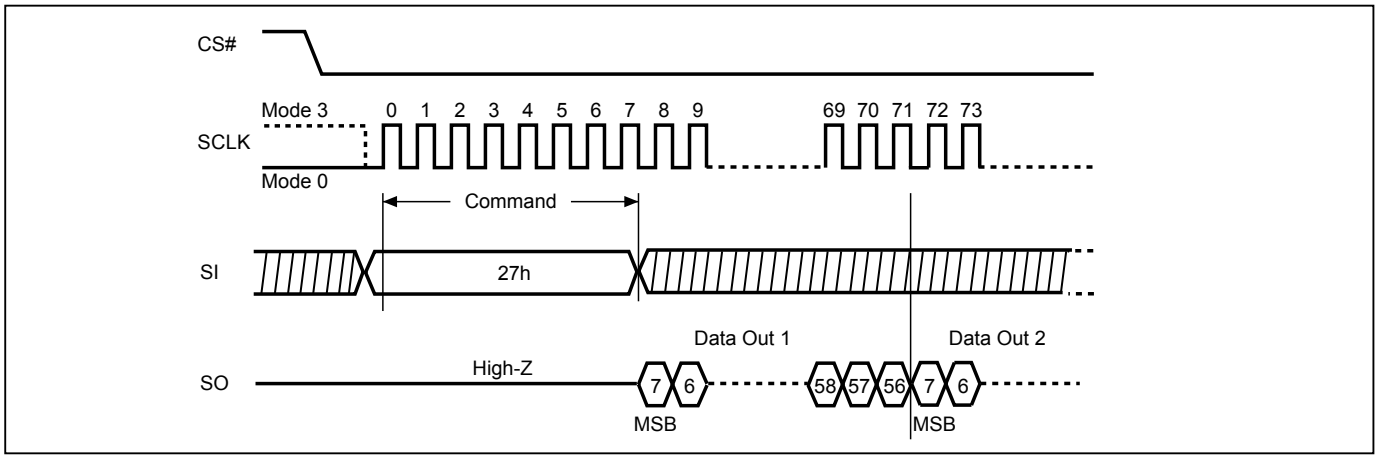

Figure 69. Write Password Register (WRPASS) Sequence

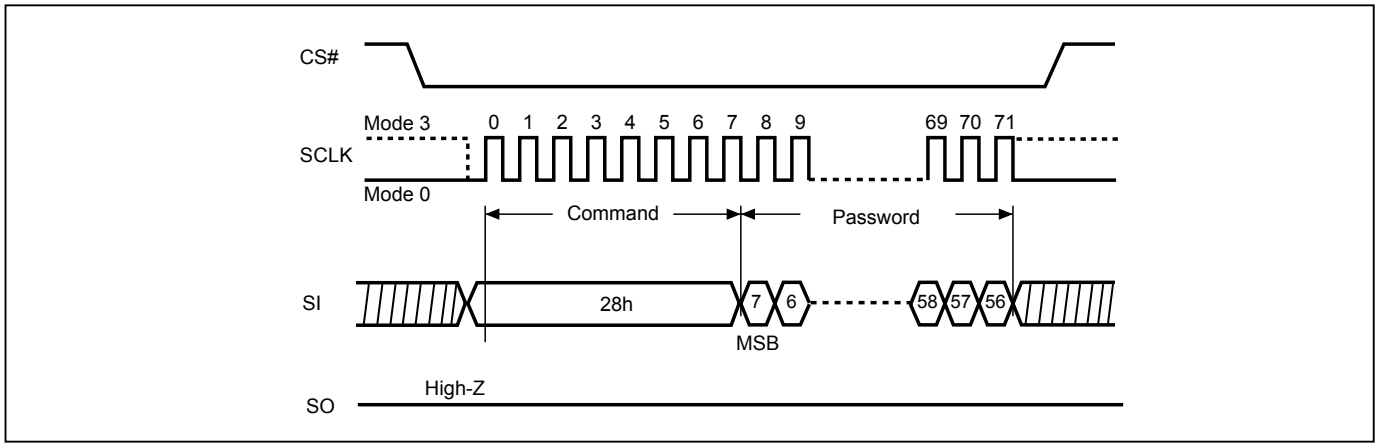

Figure 70. Password Unlock (PASSULK) Sequence

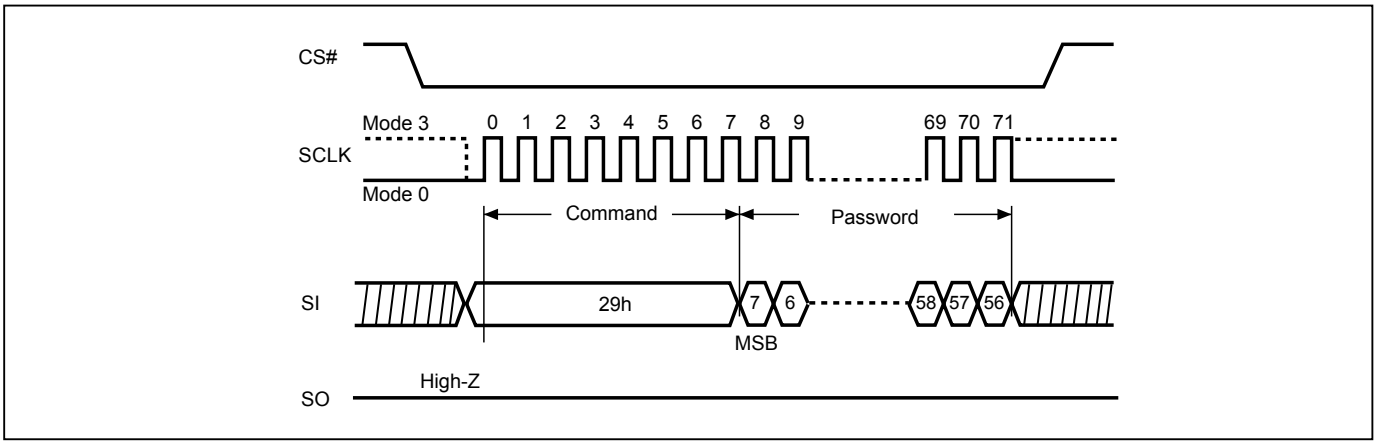

9-34. Program/Erase Suspend/Resume

The device allow the interruption of Sector-Erase, Block-Erase or Page-Program operations and conduct other operations.

After issue suspend command, the system can determine if the device has entered the Erase-Suspended mode through Bit2 (PSB) and Bit3 (ESB) of security register. (please refer to *Table 9. Security Register Definition*)

Both SPI (8 clocks) and QPI (2 clocks) command cycle can accept by this instruction. The SIO[3:1] are don't care when during SPI mode.

9-35. Erase Suspend

Erase suspend allow the interruption of all erase operations. After the device has entered Erase-Suspended mode, the system can read any sector(s) or Block(s) except those being erased by the suspended erase operation. Reading the sector or Block being erase suspended is invalid.

After erase suspend, WEL bit will be clear, only read related, resume and reset command can be accepted. (including: 03h, 0Bh, 3Bh, 6Bh, BBh, EBh, 5Ah, C0h, 06h, 04h, 2Bh, 9Fh, AFh, 05h, ABh, 90h, B1h, C1h, B0h, 30h, 66h, 99h, 00h, 35h, F5h, 15h, 2Dh, 27h, A7h, E2h, E0h, 16h)

If the system issues an Erase Suspend command after the sector erase operation has already begun, the device will not enter Erase-Suspended mode until 20us time has elapsed.

Erase Suspend Bit (ESB) indicates the status of Erase Suspend operation. Users may use ESB to identify the state of flash memory. After the flash memory is suspended by Erase Suspend command, ESB is set to "1". ESB is cleared to "0" after erase operation resumes.

9-36. Program Suspend

Program suspend allows the interruption of all program operations. After the device has entered Program-Suspended mode, the system can read any sector(s) or Block(s) except those being programmed by the suspended program operation. Reading the sector or Block being program suspended is invalid.

After program suspend, WEL bit will be cleared, only read related, resume and reset command can be accepted. (including: 03h, 0Bh, 3Bh, 6Bh, BBh, EBh, 5Ah, C0h, 06h, 04h, 2Bh, 9Fh, AFh, 05h, ABh, 90h, B1h, C1h, B0h, 30h, 66h, 99h, 00h, 35h, F5h, 15h, 2Dh, 27h, A7h, E2h, E0h, 16h)

Program Suspend Bit (PSB) indicates the status of Program Suspend operation. Users may use PSB to identify the state of flash memory. After the flash memory is suspended by Program Suspend command, PSB is set to "1". PSB is cleared to "0" after program operation resumes.

Figure 71. Suspend to Read Latency

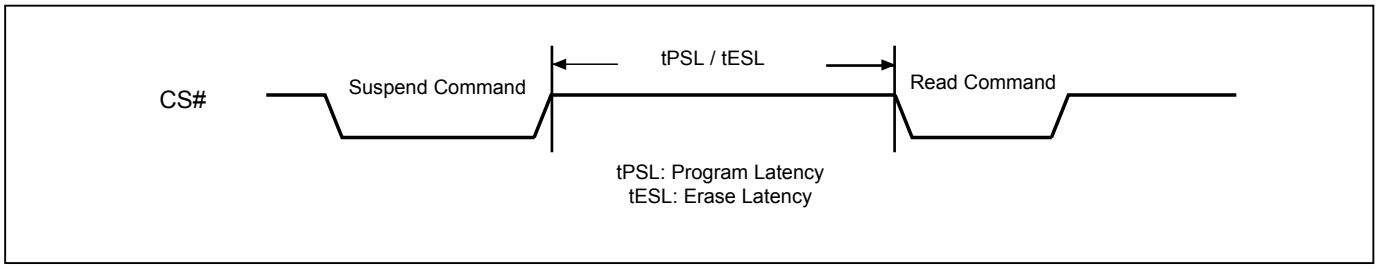

Figure 72. Resume to Read Latency

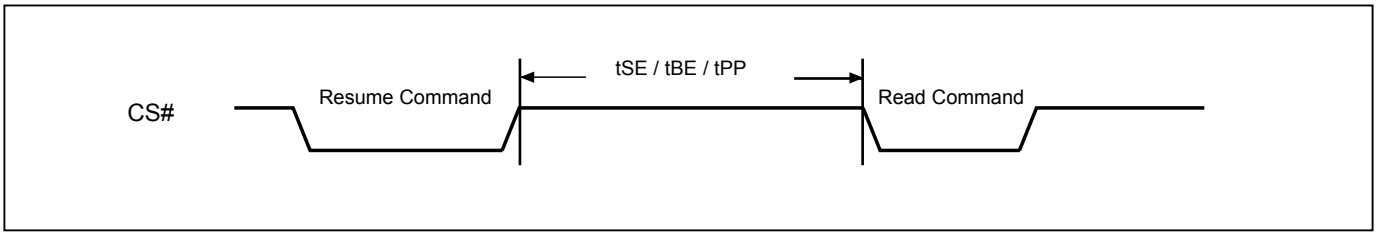

Figure 73. Resume to Suspend Latency

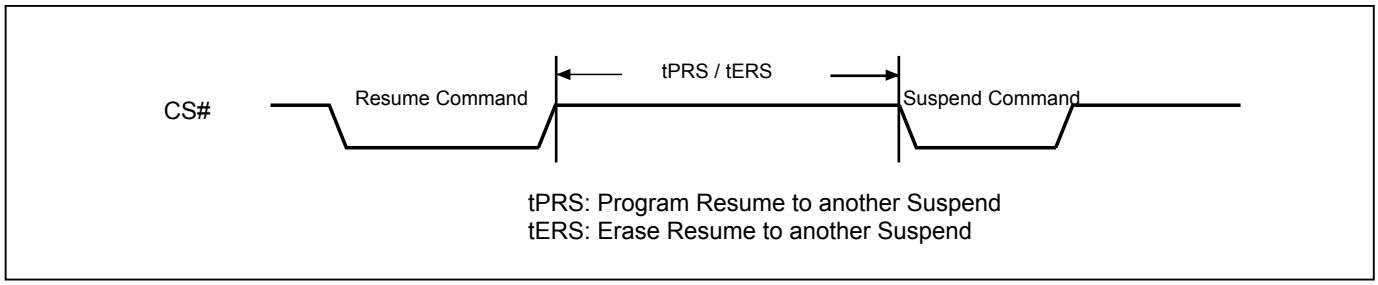

9-37. Write-Resume

The Write operation is being resumed when Write-Resume instruction issued. ESB or PSB (suspend status bit) in Status register will be changed back to “0”.

The operation of Write-Resume is as follows: CS# drives low → send write resume command cycle (30H) → drive CS# high. By polling Busy Bit in status register, the internal write operation status could be checked to be completed or not. The user may also wait the time lag of tSE, tBE, tPP for Sector-erase, Block-erase or Page-programming. WREN (command "06") is not required to issue before resume. Resume to another suspend operation requires latency time of 1ms.

Please note that, if "performance enhance mode" is executed during suspend operation, the device can not be resumed. To restart the write command, disable the "performance enhance mode" is required. After the "performance enhance mode" is disabled, the write-resume command is effective.

9-38. No Operation (NOP)

The “No Operation” command is only able to terminate the Reset Enable (RSTEN) command and will not affect any other command.

Both SPI (8 clocks) and QPI (2 clocks) command cycle can accept by this instruction. The SIO[3:1] are don't care during SPI mode.

9-39. Software Reset (Reset-Enable (RSTEN) and Reset (RST))

The Software Reset operation combines two instructions: Reset-Enable (RSTEN) command following a Reset (RST) command. It returns the device to a standby mode. All the volatile bits and settings will be cleared then, which makes the device return to the default status as power on.

To execute Reset command (RST), the Reset-Enable (RSTEN) command must be executed first to perform the Reset operation. If there is any other command to interrupt after the Reset-Enable command, the Reset-Enable will be invalid.

Both SPI (8 clocks) and QPI (2 clocks) command cycle can accept by this instruction. The SIO[3:1] are don't care when during SPI mode.

If the Reset command is executed during program or erase operation, the operation will be disabled, the data under processing could be damaged or lost.

The reset time is different depending on the last operation. For details, please refer to *Table 14. Reset Timing-(Other Operation)* for tREADY2.

Figure 74. Software Reset Recovery

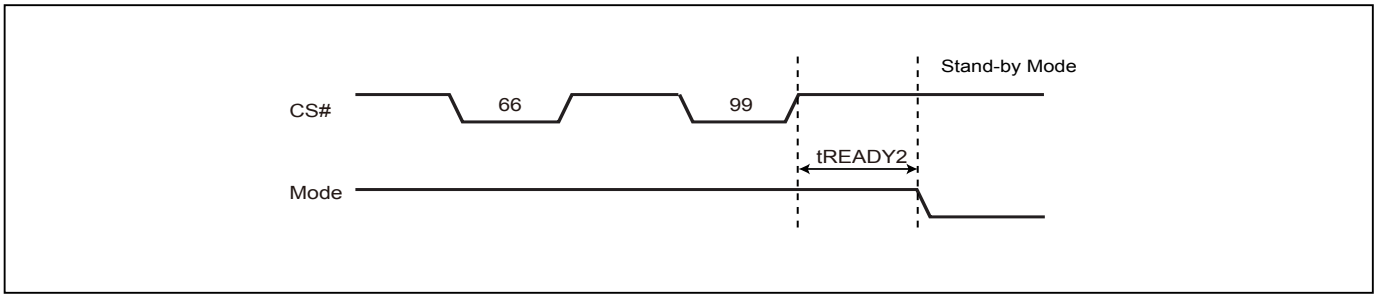

Note: Refer to *Table 14. Reset Timing-(Other Operation)* for tREADY2.

Figure 75. Reset Sequence (SPI mode)

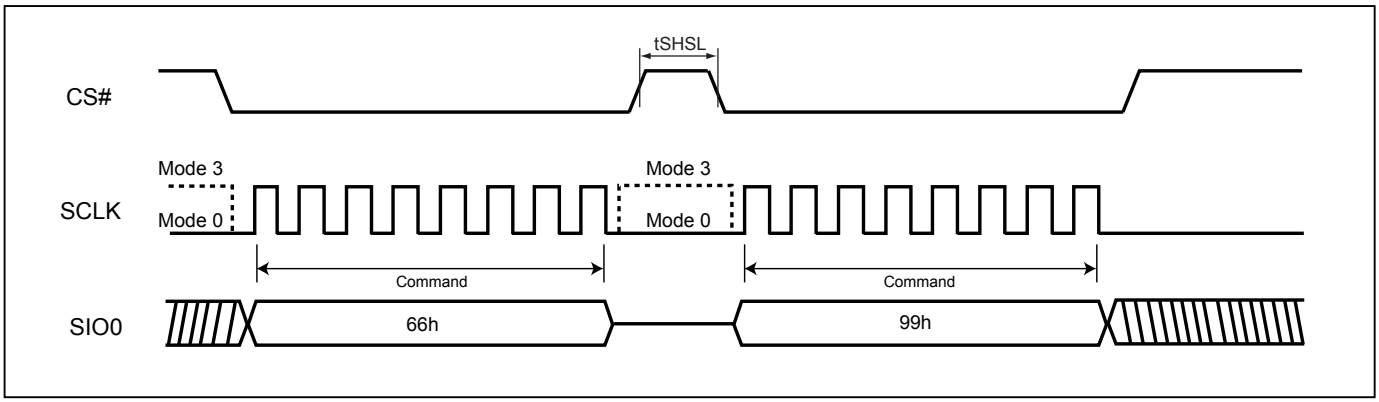

Figure 76. Reset Sequence (QPI mode)

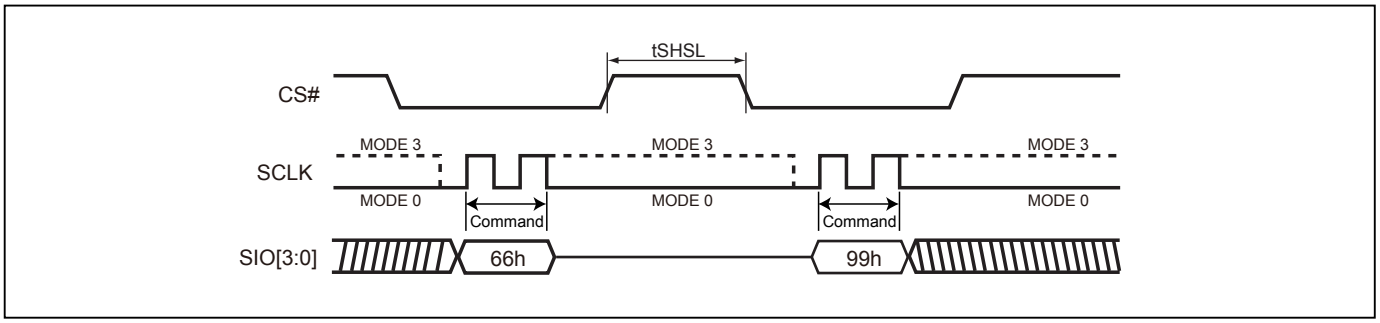

9-40. Read SFDP Mode (RDSFDP)

The Serial Flash Discoverable Parameter (SFDP) standard provides a consistent method of describing the functional and feature capabilities of serial flash devices in a standard set of internal parameter tables. These parameter tables can be interrogated by host system software to enable adjustments needed to accommodate divergent features from multiple vendors. The concept is similar to the one found in the Introduction of JEDEC Standard, JESD68 on CFI.

The sequence of issuing RDSFDP instruction is CS# goes low→send RDSFDP instruction (5Ah)→send 3 address bytes on SI pin→send 1 dummy byte on SI pin→read SFDP code on SO→to end RDSFDP operation can use CS# to high at any time during data out.

SFDP is a JEDEC Standard, JESD216.

Figure 77. Read Serial Flash Discoverable Parameter (RDSFDP) Sequence

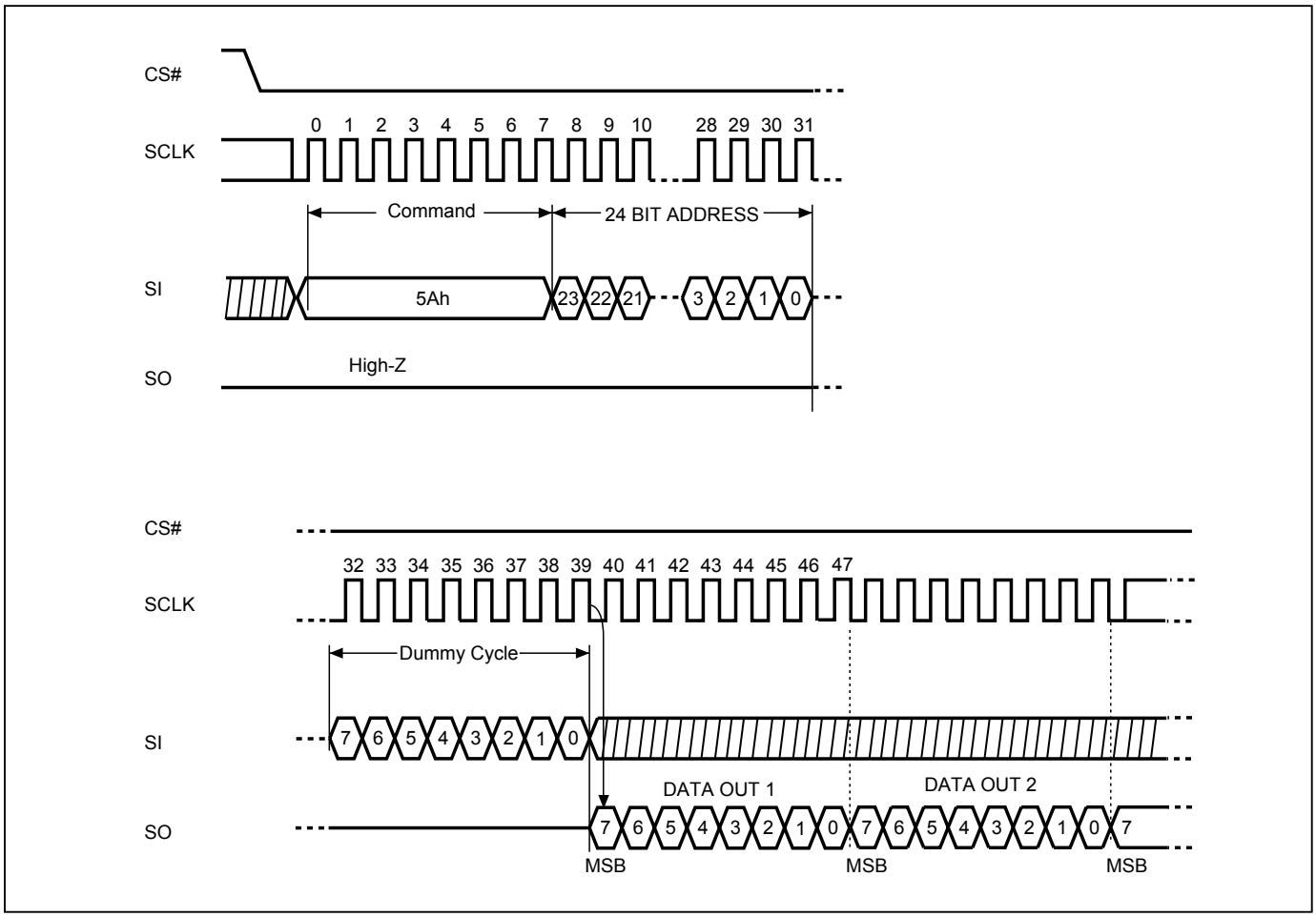

Table 10. Signature and Parameter Identification Data Values

SFDP Table below is for MX25L12835FM2I-10G, MX25L12835FMI-10G, MX25L12835FZ2I-10G and MX25L12835FZNI-10G

Description	Comment	Add (h) (Byte)	DW Add (Bit)	Data (h/b) (Note1)	Data (h)
SFDP Signature	Fixed: 50444653h	00h	07:00	53h	53h
		01h	15:08	46h	46h
		02h	23:16	44h	44h
		03h	31:24	50h	50h
SFDP Minor Revision Number	Start from 00h	04h	07:00	00h	00h
SFDP Major Revision Number	Start from 01h	05h	15:08	01h	01h
Number of Parameter Headers	This number is 0-based. Therefore, 0 indicates 1 parameter header.	06h	23:16	01h	01h
Unused		07h	31:24	FFh	FFh
ID number (JEDEC)	00h: it indicates a JEDEC specified header.	08h	07:00	00h	00h
Parameter Table Minor Revision Number	Start from 00h	09h	15:08	00h	00h
Parameter Table Major Revision Number	Start from 01h	0Ah	23:16	01h	01h
Parameter Table Length (in double word)	How many DWORDs in the Parameter table	0Bh	31:24	09h	09h
Parameter Table Pointer (PTP)	First address of JEDEC Flash Parameter table	0Ch	07:00	30h	30h
		0Dh	15:08	00h	00h
		0Eh	23:16	00h	00h
Unused		0Fh	31:24	FFh	FFh
ID number (Macronix manufacturer ID)	it indicates Macronix manufacturer ID	10h	07:00	C2h	C2h
Parameter Table Minor Revision Number	Start from 00h	11h	15:08	00h	00h
Parameter Table Major Revision Number	Start from 01h	12h	23:16	01h	01h
Parameter Table Length (in double word)	How many DWORDs in the Parameter table	13h	31:24	04h	04h
Parameter Table Pointer (PTP)	First address of Macronix Flash Parameter table	14h	07:00	60h	60h
		15h	15:08	00h	00h
		16h	23:16	00h	00h
Unused		17h	31:24	FFh	FFh

Table 11. Parameter Table (0): JEDEC Flash Parameter Tables

SFDP Table below is for MX25L12835FM2I-10G, MX25L12835FMI-10G, MX25L12835FZ2I-10G and MX25L12835FZNI-10G

Description	Comment	Add (h) (Byte)	DW Add (Bit)	Data (h/b) (Note1)	Data (h)
Block/Sector Erase sizes	00: Reserved, 01: 4KB erase, 10: Reserved, 11: not support 4KB erase	30h	01:00	01b	E5h
Write Granularity	0: 1Byte, 1: 64Byte or larger		02	1b	
Write Enable Instruction Required for Writing to Volatile Status Registers	0: not required 1: required 00h to be written to the status register		03	0b	
Write Enable Opcode Select for Writing to Volatile Status Registers	0: use 50h opcode, 1: use 06h opcode Note: If target flash status register is nonvolatile, then bits 3 and 4 must be set to 00b.		04	0b	
Unused	Contains 111b and can never be changed		07:05	111b	
4KB Erase Opcode		31h	15:08	20h	20h
(1-1-2) Fast Read (Note2)	0=not support 1=support	32h	16	1b	F1h
Address Bytes Number used in addressing flash array	00: 3Byte only, 01: 3 or 4Byte, 10: 4Byte only, 11: Reserved		18:17	00b	
Double Transfer Rate (DTR) Clocking	0=not support 1=support		19	0b	
(1-2-2) Fast Read	0=not support 1=support		20	1b	
(1-4-4) Fast Read	0=not support 1=support		21	1b	
(1-1-4) Fast Read	0=not support 1=support		22	1b	
Unused			23	1b	
Unused		33h	31:24	FFh	FFh
Flash Memory Density		37h:34h	31:00	07FF FFFFh	
(1-4-4) Fast Read Number of Wait states (Note3)	0 0000b: Wait states (Dummy Clocks) not support	38h	04:00	0 0100b	44h
(1-4-4) Fast Read Number of Mode Bits (Note4)	000b: Mode Bits not support		07:05	010b	
(1-4-4) Fast Read Opcode		39h	15:08	EBh	EBh
(1-1-4) Fast Read Number of Wait states	0 0000b: Wait states (Dummy Clocks) not support	3Ah	20:16	0 1000b	08h
(1-1-4) Fast Read Number of Mode Bits	000b: Mode Bits not support		23:21	000b	
(1-1-4) Fast Read Opcode		3Bh	31:24	6Bh	6Bh

SFDP Table below is for MX25L12835FM2I-10G, MX25L12835FMI-10G, MX25L12835FZ2I-10G and MX25L12835FZNI-10G

Description	Comment	Add (h) (Byte)	DW Add (Bit)	Data (h/b) (Note1)	Data (h)
(1-1-2) Fast Read Number of Wait states	0 0000b: Wait states (Dummy Clocks) not support	3Ch	04:00	0 1000b	08h
(1-1-2) Fast Read Number of Mode Bits	000b: Mode Bits not support		07:05	000b	
(1-1-2) Fast Read Opcode		3Dh	15:08	3Bh	3Bh
(1-2-2) Fast Read Number of Wait states	0 0000b: Wait states (Dummy Clocks) not support	3Eh	20:16	0 0100b	04h
(1-2-2) Fast Read Number of Mode Bits	000b: Mode Bits not support		23:21	000b	
(1-2-2) Fast Read Opcode		3Fh	31:24	BBh	BBh
(2-2-2) Fast Read	0=not support 1=support	40h	00	0b	FEh
Unused			03:01	111b	
(4-4-4) Fast Read	0=not support 1=support		04	1b	
Unused			07:05	111b	
Unused		43h:41h	31:08	FFh	FFh
Unused		45h:44h	15:00	FFh	FFh
(2-2-2) Fast Read Number of Wait states	0 0000b: Wait states (Dummy Clocks) not support	46h	20:16	0 0000b	00h
(2-2-2) Fast Read Number of Mode Bits	000b: Mode Bits not support		23:21	000b	
(2-2-2) Fast Read Opcode		47h	31:24	FFh	FFh
Unused		49h:48h	15:00	FFh	FFh
(4-4-4) Fast Read Number of Wait states	0 0000b: Wait states (Dummy Clocks) not support	4Ah	20:16	0 0100b	44h
(4-4-4) Fast Read Number of Mode Bits	000b: Mode Bits not support		23:21	010b	
(4-4-4) Fast Read Opcode		4Bh	31:24	EBh	EBh
Sector Type 1 Size	Sector/block size = 2^N bytes (Note5) 0x00b: this sector type doesn't exist	4Ch	07:00	0Ch	0Ch
Sector Type 1 erase Opcode		4Dh	15:08	20h	20h
Sector Type 2 Size	Sector/block size = 2^N bytes 0x00b: this sector type doesn't exist	4Eh	23:16	0Fh	0Fh
Sector Type 2 erase Opcode		4Fh	31:24	52h	52h
Sector Type 3 Size	Sector/block size = 2^N bytes 0x00b: this sector type doesn't exist	50h	07:00	10h	10h
Sector Type 3 erase Opcode		51h	15:08	D8h	D8h
Sector Type 4 Size	Sector/block size = 2^N bytes 0x00b: this sector type doesn't exist	52h	23:16	00h	00h
Sector Type 4 erase Opcode		53h	31:24	FFh	FFh

Table 12. Parameter Table (1): Macronix Flash Parameter Tables

SFDP Table below is for MX25L12835FM2I-10G, MX25L12835FMI-10G, MX25L12835FZ2I-10G and MX25L12835FZNI-10G

Description	Comment	Add (h) (Byte)	DW Add (Bit)	Data (h/b) (Note1)	Data (h)
Vcc Supply Maximum Voltage	2000h=2.000V 2700h=2.700V 3600h=3.600V	61h:60h	07:00 15:08	00h 36h	00h 36h
Vcc Supply Minimum Voltage	1750h=1.750V 1650h=1.650V 2250h=2.250V 2350h=2.350V 2700h=2.700V	63h:62h	23:16 31:24	00h 27h	00h 27h
H/W Reset# pin	0=not support 1=support	65h:64h	00	1b	F99Dh
H/W Hold# pin	0=not support 1=support		01	0b	
Deep Power Down Mode	0=not support 1=support		02	1b	
S/W Reset	0=not support 1=support		03	1b	
S/W Reset Opcode	Reset Enable (66h) should be issued before Reset Opcode		11:04	1001 1001b (99h)	
Program Suspend/Resume	0=not support 1=support		12	1b	
Erase Suspend/Resume	0=not support 1=support		13	1b	
Unused			14	1b	
Wrap-Around Read mode	0=not support 1=support		15	1b	
Wrap-Around Read mode Opcode		66h	23:16	C0h	C0h
Wrap-Around Read data length	08h:support 8B wrap-around read 16h:8B&16B 32h:8B&16B&32B 64h:8B&16B&32B&64B	67h	31:24	64h	64h
Individual block lock	0=not support 1=support	6Bh:68h	00	1b	CB85h
Individual block lock bit (Volatile/Nonvolatile)	0=Volatile 1=Nonvolatile		01	0b	
Individual block lock Opcode			09:02	1110 0001b (E1h)	
Individual block lock Volatile protect bit default protect status	0=protect 1=unprotect		10	0b	
Secured OTP	0=not support 1=support		11	1b	
Read Lock	0=not support 1=support		12	0b	
Permanent Lock	0=not support 1=support		13	0b	
Unused			15:14	11b	
Unused			31:16	FFh	FFh
Unused		6Fh:6Ch	31:00	FFh	FFh

Note 1: h/b is hexadecimal or binary.

Note 2: **(x-y-z)** means I/O mode nomenclature used to indicate the number of active pins used for the opcode (x), address (y), and data (z). At the present time, the only valid Read SFDP instruction modes are: (1-1-1), (2-2-2), and (4-4-4)

Note 3: **Wait States** is required dummy clock cycles after the address bits or optional mode bits.

Note 4: **Mode Bits** is optional control bits that follow the address bits. These bits are driven by the system controller if they are specified. (eg,read performance enhance toggling bits)

Note 5: 4KB=2^0Ch,32KB=2^0Fh,64KB=2^10h

Note 6: All unused and undefined area data is blank FFh for SFDP Tables that are defined in Parameter Identification Header. All other areas beyond defined SFDP Table are reserved by Macronix.

10. RESET

Driving the RESET# pin low for a period of tRLRH or longer will reset the device. After reset cycle, the device is at the following states:
- Standby mode
- All the volatile bits such as WEL/WIP/SRAM lock bit will return to the default status as power on.
- 3-byte address mode

If the device is under programming or erasing, driving the RESET# pin low will also terminate the operation and data could be lost. During the resetting cycle, the SO data becomes high impedance and the current will be reduced to minimum.

Figure 78. RESET Timing

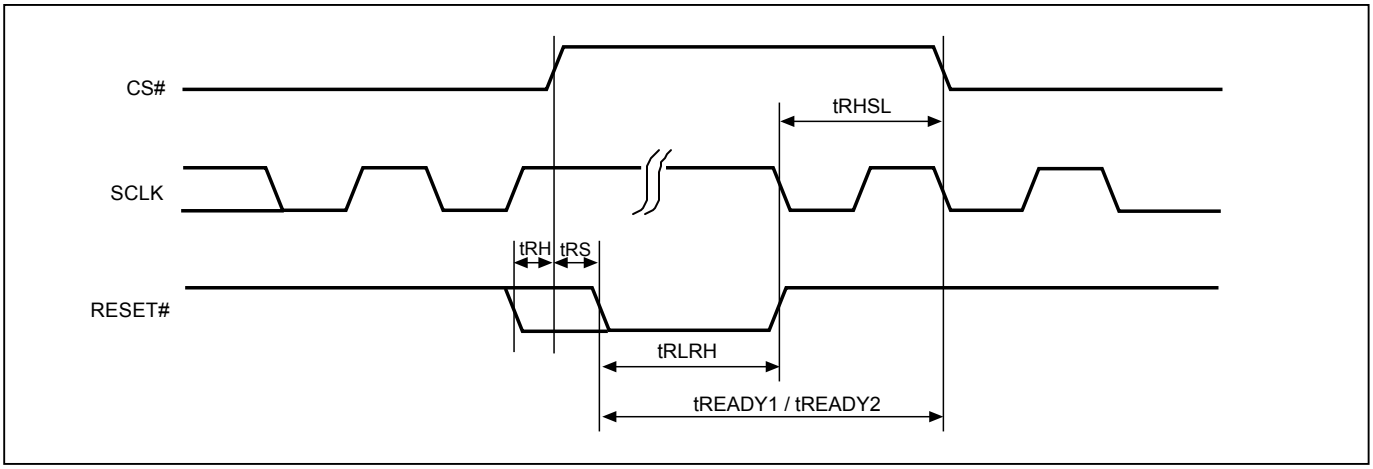

Table 13. Reset Timing-(Power On)

Symbol	Parameter	Min.	Typ.	Max.	Unit
tRHSL	Reset# high before CS# low	10			us
tRS	Reset# setup time	15			ns
tRH	Reset# hold time	15			ns
tRLRH	Reset# low pulse width	10			us
tREADY1	Reset Recovery time	35			us

Table 14. Reset Timing-(Other Operation)

Symbol	Parameter	Min.	Typ.	Max.	Unit
tRHSL	Reset# high before CS# low	10			us
tRS	Reset# setup time	15			ns
tRH	Reset# hold time	15			ns
tRLRH	Reset# low pulse width	10			us
tREADY2	Reset Recovery time (During instruction decoding)	40			us
	Reset Recovery time (for read operation)	35			us
	Reset Recovery time (for program operation)	310			us
	Reset Recovery time(for SE4KB operation)	12			ms
	Reset Recovery time (for BE64K/BE32KB operation)	25			ms
	Reset Recovery time (for Chip Erase operation)	100			ms
	Reset Recovery time (for WRSR operation)	40			ms

11. POWER-ON STATE

The device is at below states when power-up:
- Standby mode (please note it is not deep power-down mode)
- Write Enable Latch (WEL) bit is reset

The device must not be selected during power-up and power-down stage unless the VCC achieves below correct level:
- VCC minimum at power-up stage and then after a delay of tVSL
- GND at power-down

Please note that a pull-up resistor on CS# may ensure a safe and proper power-up/down level.

An internal power-on reset (POR) circuit may protect the device from data corruption and inadvertent data change during power up state. When VCC is lower than VWI (POR threshold voltage value), the internal logic is reset and the flash device has no response to any command.

For further protection on the device, if the VCC does not reach the VCC minimum level, the correct operation is not guaranteed. The read, write, erase, and program command should be sent after the below time delay:
- tVSL after VCC reached VCC minimum level

Please refer to the *Figure 85. Power-up Timing*.

Note:
- To stabilize the VCC level, the VCC rail decoupled by a suitable capacitor close to package pins is recommended. (generally around 0.1uF)
- At power-down stage, the VCC drops below VWI level, all operations are disable and device has no response to any command. The data corruption might occur during the stage while a write, program, erase cycle is in progress.

12. ELECTRICAL SPECIFICATIONS

Table 15. ABSOLUTE MAXIMUM RATINGS

RATING		VALUE
Ambient Operating Temperature	Industrial grade	-40°C to 85°C
Storage Temperature		-65°C to 150°C
Applied Input Voltage		-0.5V to VCC+0.5V
Applied Output Voltage		-0.5V to VCC+0.5V
VCC to Ground Potential		-0.5V to 4.0V

NOTICE:
1. Stresses greater than those listed under ABSOLUTE MAXIMUM RATINGS may cause permanent damage to the device. This is stress rating only and functional operational sections of this specification is not implied. Exposure to absolute maximum rating conditions for extended period may affect reliability.
2. Specifications contained within the following tables are subject to change.
3. During voltage transitions, all pins may overshoot Vss to -2.0V and Vcc to +2.0V for periods up to 20ns, see *Figure 79* and *Figure 80.*

Figure 79. Maximum Negative Overshoot Waveform

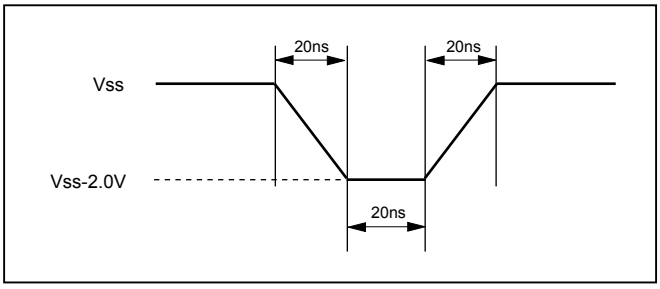

Figure 80. Maximum Positive Overshoot Waveform

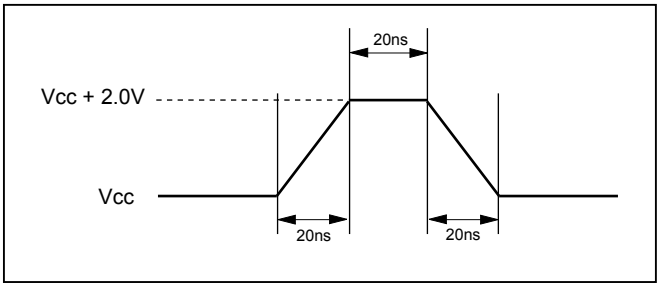

Table 16. CAPACITANCE TA = 25°C, f = 1.0 MHz

Symbol	Parameter	Min.	Typ.	Max.	Unit	Conditions
CIN	Input Capacitance			6	pF	VIN = 0V
COUT	Output Capacitance			8	pF	VOUT = 0V

Figure 81. INPUT TEST WAVEFORMS AND MEASUREMENT LEVEL

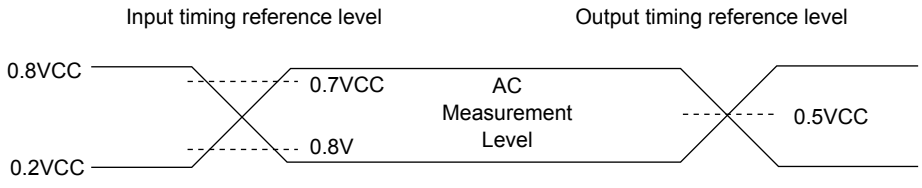

Note: Input pulse rise and fall time are <5ns

Figure 82. OUTPUT LOADING

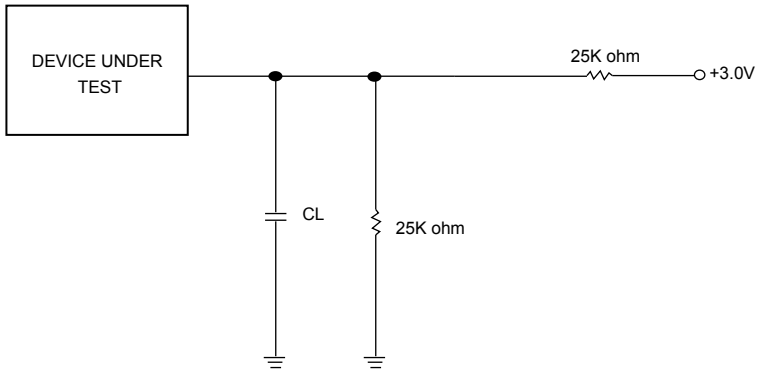

CL=30pF Including jig capacitance

Table 17. DC CHARACTERISTICS

(Temperature = -40°C to 85°C, VCC = 2.7V ~ 3.6V)

Symbol	Parameter	Notes	Min.	Typ.	Max.	Units	Test Conditions
ILI	Input Load Current	1			±2	uA	VCC = VCC Max, VIN = VCC or GND
ILO	Output Leakage Current	1			±2	uA	VCC = VCC Max, VOUT = VCC or GND
ISB1	VCC Standby Current	1		10	50	uA	VIN = VCC or GND, CS# = VCC
ISB2	Deep Power-down Current			2	20	uA	VIN = VCC or GND, CS# = VCC
ICC1	VCC Read	1		14	25	mA	f=133MHz, (4 x I/O read) SCLK=0.1VCC/0.9VCC, SO=Open
					20	mA	f=104MHz, (4 x I/O read) SCLK=0.1VCC/0.9VCC, SO=Open
					15	mA	f=84MHz, SCLK=0.1VCC/0.9VCC, SO=Open
ICC2	VCC Program Current (PP)	1		14	20	mA	Program in Progress, CS# = VCC
ICC3	VCC Write Status Register (WRSR) Current			10	12	mA	Program status register in progress, CS#=VCC
ICC4	VCC Sector/Block (32K, 64K) Erase Current (SE/BE/BE32K)	1		14	25	mA	Erase in Progress, CS#=VCC
ICC5	VCC Chip Erase Current (CE)	1		14	25	mA	Erase in Progress, CS#=VCC
VIL	Input Low Voltage		-0.5		0.8	V	
VIH	Input High Voltage		0.7VCC		VCC+0.4	V	
VOL	Output Low Voltage				0.2	V	IOL = 100uA
VOH	Output High Voltage		VCC-0.2			V	IOH = -100uA

Notes :
1. Typical values at VCC = 3.3V, T = 25°C. These currents are valid for all product versions (package and speeds).
2. Typical value is calculated by simulation.

Table 18. AC CHARACTERISTICS

(Temperature = -40°C to 85°C, VCC = 2.7V ~ 3.6V)

Symbol	Alt.	Parameter		Min.	Typ.	Max.	Unit
fSCLK	fC	Clock Frequency for all commands (except Read)		D.C.		133	MHz
fRSCLK	fR	Clock Frequency for READ instructions				50	MHz
fTSCLK	fT	Clock Frequency for 2READ instructions				84(7)	MHz
	fQ	Clock Frequency for 4READ instructions				84(7)	MHz
tCH(1)	tCLH	Clock High Time	Others (fSCLK)	3.3			ns
			Normal Read (fRSCLK)	7			ns
tCL(1)	tCLL	Clock Low Time	Others (fSCLK)	3.3			ns
			Normal Read (fRSCLK)	7			ns
tCLCH(2)		Clock Rise Time (peak to peak)		0.1			V/ns
tCHCL(2)		Clock Fall Time (peak to peak)		0.1			V/ns
tSLCH	tCSS	CS# Active Setup Time (relative to SCLK)		3			ns
tCHSL		CS# Not Active Hold Time (relative to SCLK)		3			ns
tDVCH	tDSU	Data In Setup Time		2			ns
tCHDX	tDH	Data In Hold Time		2			ns
tCHSH		CS# Active Hold Time (relative to SCLK)		3			ns
tSHCH		CS# Not Active Setup Time (relative to SCLK)		3			ns
tSHSL	tCSH	CS# Deselect Time	Read	7			ns
			Write/Erase/Program	30			ns
tSHQZ(2)	tDIS	Output Disable Time				8	ns
tCLQV	tV	Clock Low to Output Valid Loading: 30pF/15pF	Loading: 30pF			8	ns
			Loading: 15pF			6	ns
tCLQX	tHO	Output Hold Time		1			ns
tWHSL(3)		Write Protect Setup Time		20			ns
tSHWL(3)		Write Protect Hold Time		100			ns
tDP(2)		CS# High to Deep Power-down Mode				10	us
tRES1(2)		CS# High to Standby Mode without Electronic Signature Read				30	us
tRES2(2)		CS# High to Standby Mode with Electronic Signature Read				30	us
tW		Write Status/Configuration Register Cycle Time				40	ms
tBP		Byte-Program			16	30	us
tPP		Page Program Cycle Time			0.5	1.5	ms
tPP(5)		Page Program Cycle Time (n bytes)			0.008+ (nx0.004) (6)	1.5	ms
tSE		Sector Erase Cycle Time			30	120	ms
tBE32		Block Erase (32KB) Cycle Time			150	650	ms
tBE		Block Erase (64KB) Cycle Time			280	650	ms
tCE		Chip Erase Cycle Time			50	80	s
tESL(8)		Erase Suspend Latency				25	us
tPSL(8)		Program Suspend Latency				25	us
tPRS(9)		Latency between Program Resume and next Suspend		0.3	100		us
tERS(10)		Latency between Erase Resume and next Suspend		0.3	400		us

Notes:

1. tCH + tCL must be greater than or equal to 1/ Frequency.
2. Typical values given for TA=25°C. Not 100% tested.
3. Only applicable as a constraint for a WRSR instruction when SRWD is set at 1.
4. Test condition is shown as *Figure 81. INPUT TEST WAVEFORMS AND MEASUREMENT LEVEL* and *Figure 82. OUTPUT LOADING*.
5. While programming consecutive bytes, Page Program instruction provides optimized timings by selecting to program the whole 256 bytes or only a few bytes between 1~256 bytes.
6. “n”=how many bytes to program. In the formula, while n=1, byte program time=12us.
7. By default dummy cycle value. Please refer to the *Table 1. Read performance Comparison.*
8. Latency time required to complete Erase/Program Suspend operation until WIP bit is "0".
9. For tPRS, Min. timing is needed to issue next program suspend command. However, a period of time equal to/ or longer than typ. timing is also required to complete the program progress.
10. For tERS, Min. timing is needed to issue next erase suspend command. However, a period of time equal to/or longer than typ. timing is also required to complete the erase progress.

13. OPERATING CONDITIONS

At Device Power-Up and Power-Down

AC timing illustrated in *Figure 83. AC Timing at Device Power-Up* and *Figure 84. Power-Down Sequence* are for the supply voltages and the control signals at device power-up and power-down. If the timing in the figures is ignored, the device will not operate correctly.

During power-up and power-down, CS# needs to follow the voltage applied on VCC to keep the device not to be selected. The CS# can be driven low when VCC reach Vcc(min.) and wait a period of tVSL.

Figure 83. AC Timing at Device Power-Up

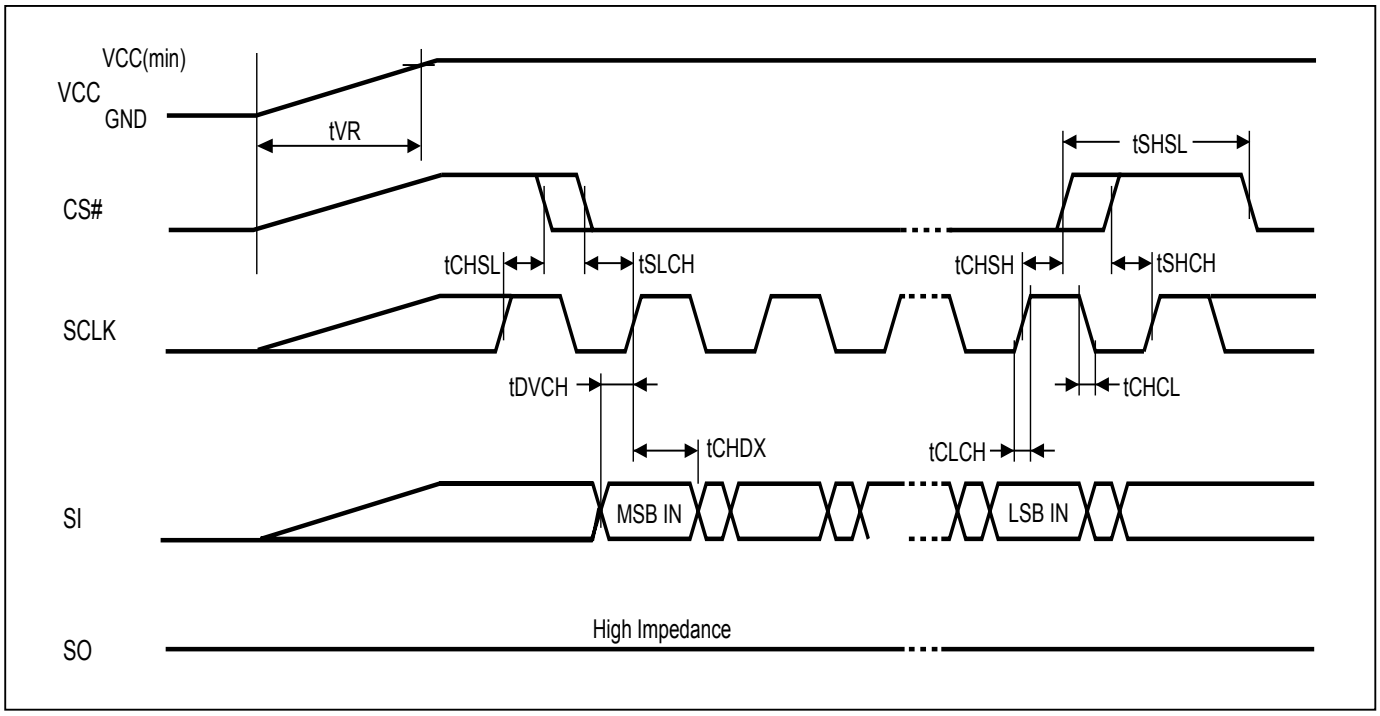

Symbol	Parameter	Notes	Min.	Max.	Unit
tVR	VCC Rise Time	1	20	500000	us/V

Notes :
1. Sampled, not 100% tested.
2. For AC spec tCHSL, tSLCH, tDVCH, tCHDX, tSHSL, tCHSH, tSHCH, tCHCL, tCLCH in the figure, please refer to *Table 17.* AC CHARACTERISTICS.

Figure 84. Power-Down Sequence

During power-down, CS# needs to follow the voltage drop on VCC to avoid mis-operation.

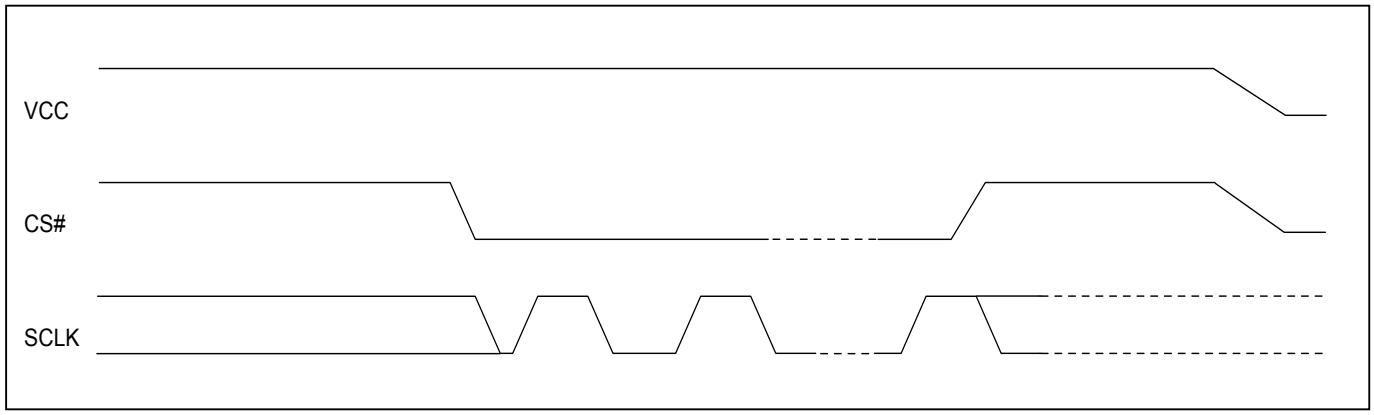

Figure 85. Power-up Timing

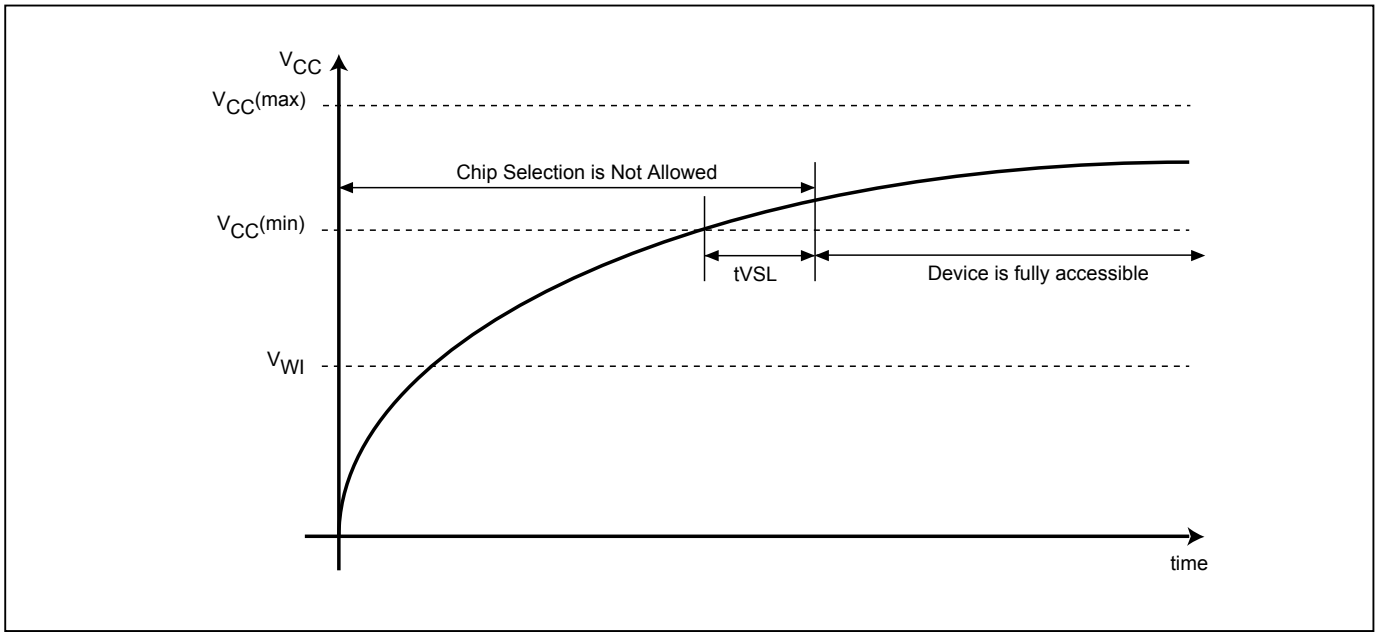

Figure 86. Power Up/Down and Voltage Drop

For Power-down to Power-up operation, the VCC of flash device must below V_{PWD} for at least tPWD timing. Please check the table below for more detail.

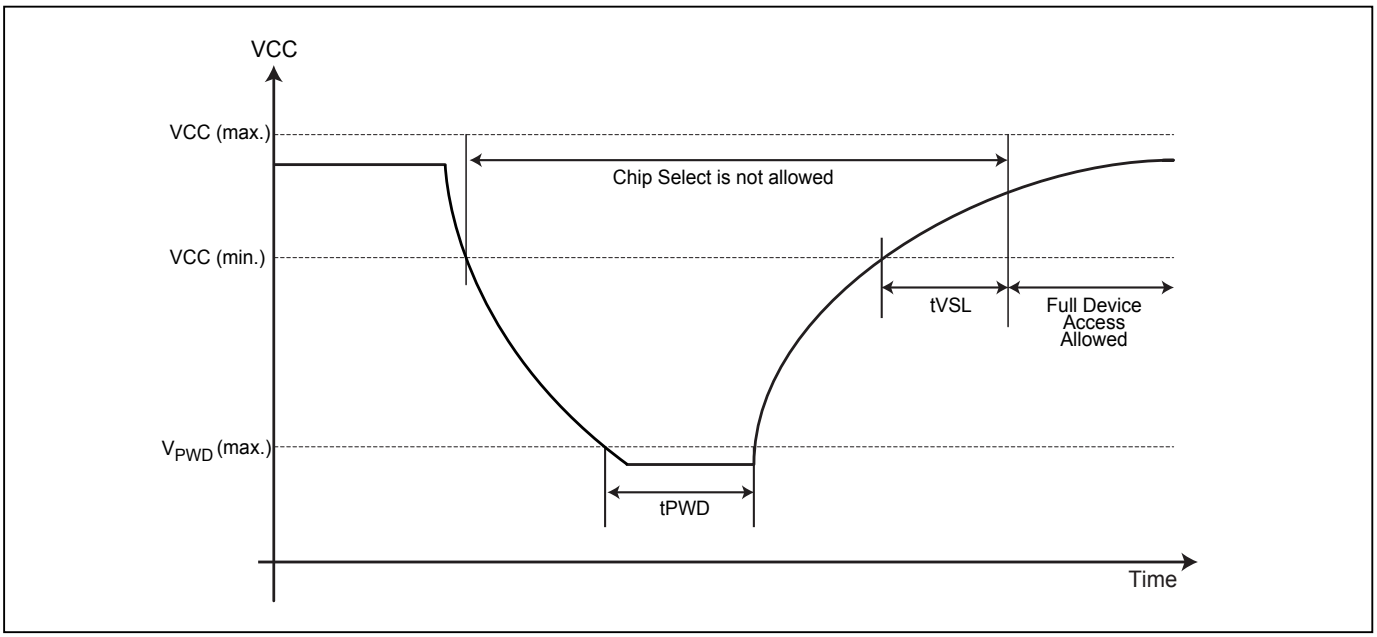

Table 19. Power-Up/Down Voltage and Timing

Symbol	Parameter	Min.	Max.	Unit
tVSL	VCC(min.) to device operation	800		us
VWI	Command Inhibit Voltage	2.3	2.5	V
V_{PWD}	VCC voltage needed to below V_{PWD} for ensuring initialization will occur		0.9	V
tPWD	The minimum duration for ensuring initialization will occur	300		us
tVR	VCC Rise Time	20	500000	us/V
VCC	VCC Power Supply	2.7	3.6	V

Note: These parameters are characterized only.

13-1. INITIAL DELIVERY STATE

The device is delivered with the memory array erased: all bits are set to 1 (each byte contains FFh). The Status Register contains 00h (all Status Register bits are 0).

14. ERASE AND PROGRAMMING PERFORMANCE

Parameter	Min.	Typ. (1)	Max. (2)	Unit
Write Status Register Cycle Time			40	ms
Sector Erase Cycle Time (4KB)		30	120	ms
Block Erase Cycle Time (32KB)		0.15	0.65	s
Block Erase Cycle Time (64KB)		0.28	0.65	s
Chip Erase Cycle Time		50	80	s
Byte Program Time (via page program command)		16	30	us
Page Program Time		0.5	1.5	ms
Erase/Program Cycle		100,000		cycles

Note:
1. Typical program and erase time assumes the following conditions: 25°C, 3.3V, and all zero pattern.
2. Under worst conditions of 85°C and 2.7V.
3. System-level overhead is the time required to execute the first-bus-cycle sequence for the programming command.
4. The maximum chip programming time is evaluated under the worst conditions of 0°C, VCC=3.3V, and 100K cycle with 90% confidence level.

15. DATA RETENTION

Parameter	Condition	Min.	Max.	Unit
Data retention	55°C	20		years

16. LATCH-UP CHARACTERISTICS

	Min.	Max.
Input Voltage with respect to GND on all power pins, SI, CS#	-1.0V	2 VCCmax
Input Voltage with respect to GND on SO	-1.0V	VCC + 1.0V
Current	-100mA	+100mA
Includes all pins except VCC. Test conditions: VCC = 3.0V, one pin at a time.		

17. ORDERING INFORMATION

PART NO.	CLOCK (MHz)	TEMPERATURE	PACKAGE	Remark
MX25L12835FM2I-10G	104	-40°C~85°C	8-SOP (200mil)	
MX25L12835FMI-10G	104	-40°C~85°C	16-SOP (300mil)	
MX25L12835FZ2I-10G	104	-40°C~85°C	8-WSON (8x6mm)	
MX25L12835FZNI-10G	104	-40°C~85°C	8-WSON (6x5mm)	

18. PART NAME DESCRIPTION

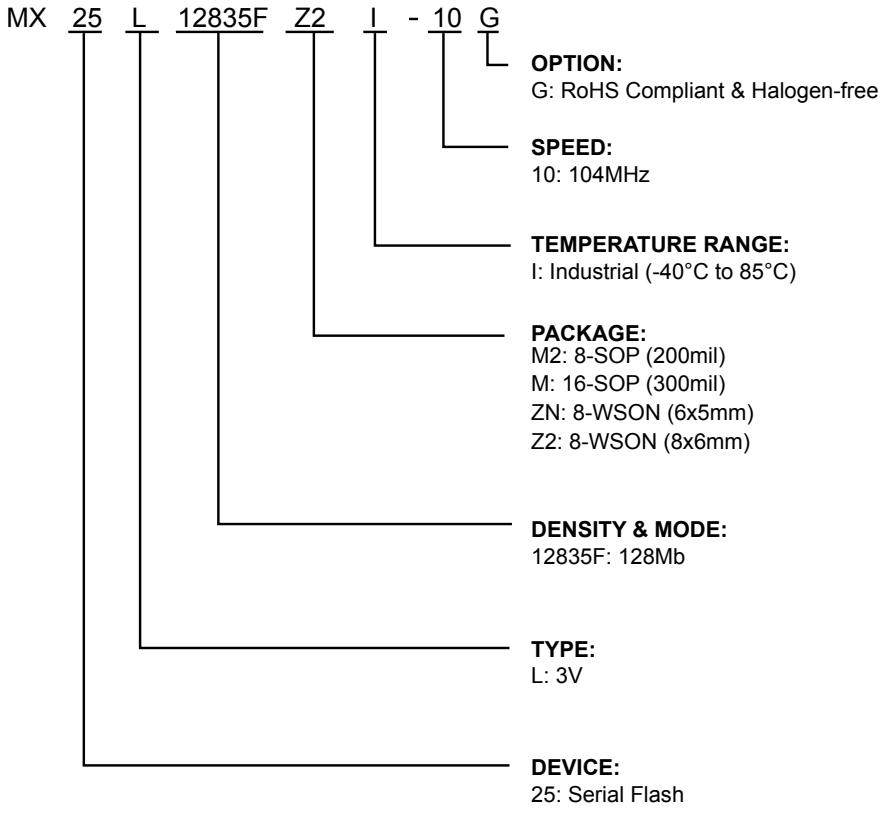

19. PACKAGE INFORMATION

Doc. Title: Package Outline for SOP 8L 200MIL (official name - 209MIL)

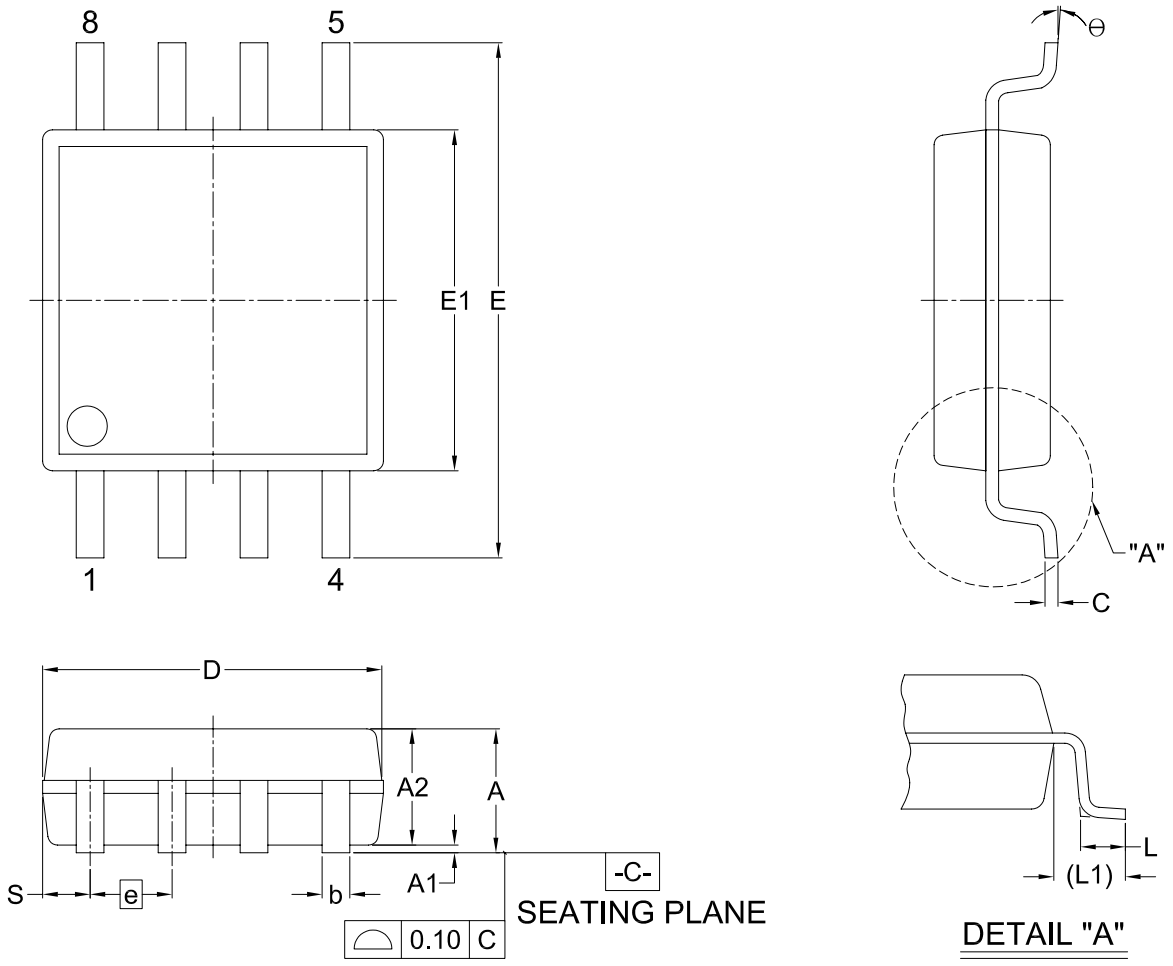

Dimensions (inch dimensions are derived from the original mm dimensions)

SYMBOL / UNIT		A	A1	A2	b	C	D	E	E1	e	L	L1	S	θ
mm	Min.	1.75	0.05	1.70	0.36	0.19	5.13	7.70	5.18	—	0.50	1.21	0.62	0
	Nom.	1.95	0.15	1.80	0.41	0.20	5.23	7.90	5.28	1.27	0.65	1.31	0.74	5
	Max.	2.16	0.20	1.91	0.51	0.25	5.33	8.10	5.38	—	0.80	1.41	0.88	8
Inch	Min.	0.069	0.002	0.067	0.014	0.007	0.202	0.303	0.204	—	0.020	0.048	0.024	0
	Nom.	0.077	0.006	0.071	0.016	0.008	0.206	0.311	0.208	0.050	0.026	0.052	0.029	5
	Max.	0.085	0.008	0.075	0.020	0.010	0.210	0.319	0.212	—	0.031	0.056	0.035	8

Dwg. No.	Revision	Reference			
		JEDEC	EIAJ		
6110-1406	4				

Doc. Title: Package Outline for SOP 16L (300MIL)

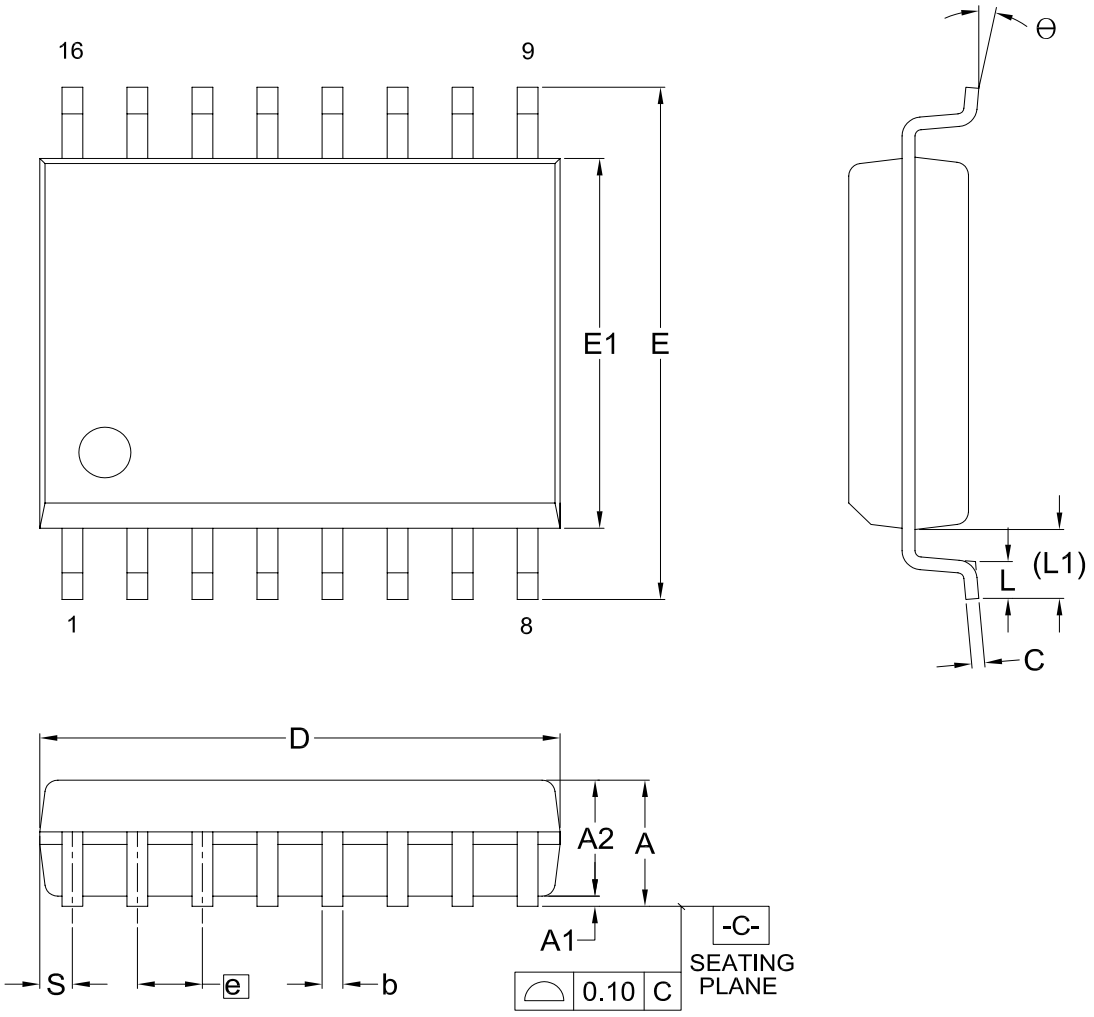

Dimensions (inch dimensions are derived from the original mm dimensions)

SYMBOL / UNIT		A	A1	A2	b	C	D	E	E1	e	L	L1	S	Θ
mm	Min.	---	0.10	2.34	0.36	0.20	10.10	10.10	7.42	---	0.40	1.31	0.51	0
	Nom.	---	0.20	2.39	0.41	0.25	10.30	10.30	7.52	1.27	0.84	1.44	0.64	5
	Max.	2.65	0.30	2.44	0.51	0.30	10.50	10.50	7.60	---	1.27	1.57	0.77	8
Inch	Min.	---	0.004	0.092	0.014	0.008	0.397	0.397	0.292	---	0.016	0.052	0.020	0
	Nom.	---	0.008	0.094	0.016	0.010	0.405	0.405	0.296	0.050	0.033	0.057	0.025	5
	Max.	0.104	0.012	0.096	0.020	0.012	0.413	0.413	0.299	---	0.050	0.062	0.030	8

Dwg. No.	Revision	Reference			
		JEDEC	EIAJ		
6110-1402	11	MS-013			

Doc. Title: Package Outline for WSON 8L (6x5x0.8MM, LEAD PITCH 1.27MM)

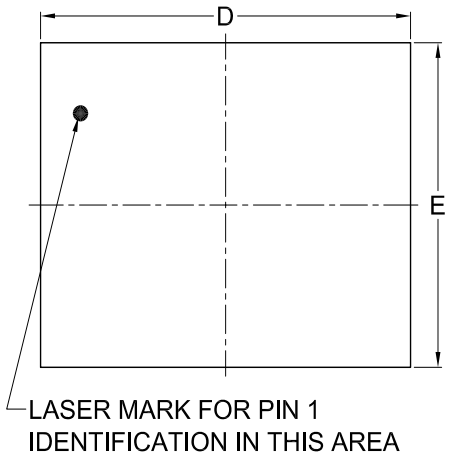

TOP VIEW

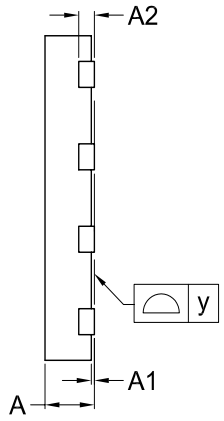

SIDE VIEW

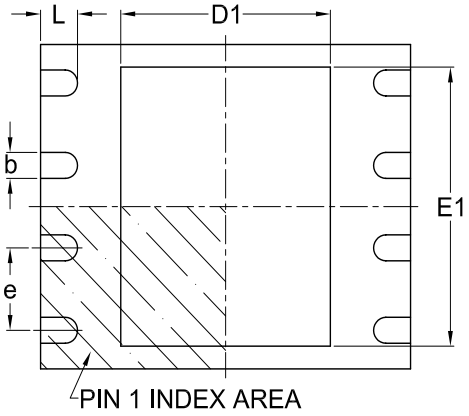

BOTTOM VIEW

Note:

This package has an exposed metal pad underneath the package. It is recommended to leave the metal pad floating or to connect it to the same ground as the GND pin of the package. Do not connect the metal pad to any other voltage or signal line on the PCB. Avoid placing vias or traces underneath the metal pad. Connection of this metal pad to any other voltage or signal line can result in shorts and/or electrical malfunction of the device.

Dimensions (inch dimensions are derived from the original mm dimensions)

SYMBOL / UNIT		A	A1	A2	b	D	D1	E	E1	L	e	y
mm	Min.	0.70	---	---	0.35	5.90	3.30	4.90	3.90	0.50	---	0.00
	Nom.	---	---	0.20	0.40	6.00	3.40	5.00	4.00	0.60	1.27	---
	Max.	0.80	0.05	---	0.48	6.10	3.50	5.10	4.10	0.75	---	0.08
Inch	Min.	0.028	---	---	0.014	0.232	0.129	0.193	0.154	0.020	---	0.00
	Nom.	---	---	0.008	0.016	0.236	0.134	0.197	0.157	0.024	0.05	---
	Max.	0.032	0.002	---	0.019	0.240	0.138	0.201	0.161	0.030	---	0.003

Dwg. No.	Revision	Reference			
		JEDEC	EIAJ		
6110-3401	6	MO-220			

Doc. Title: Package Outline for WSON 8L (8x6x0.8MM, LEAD PITCH 1.27MM)

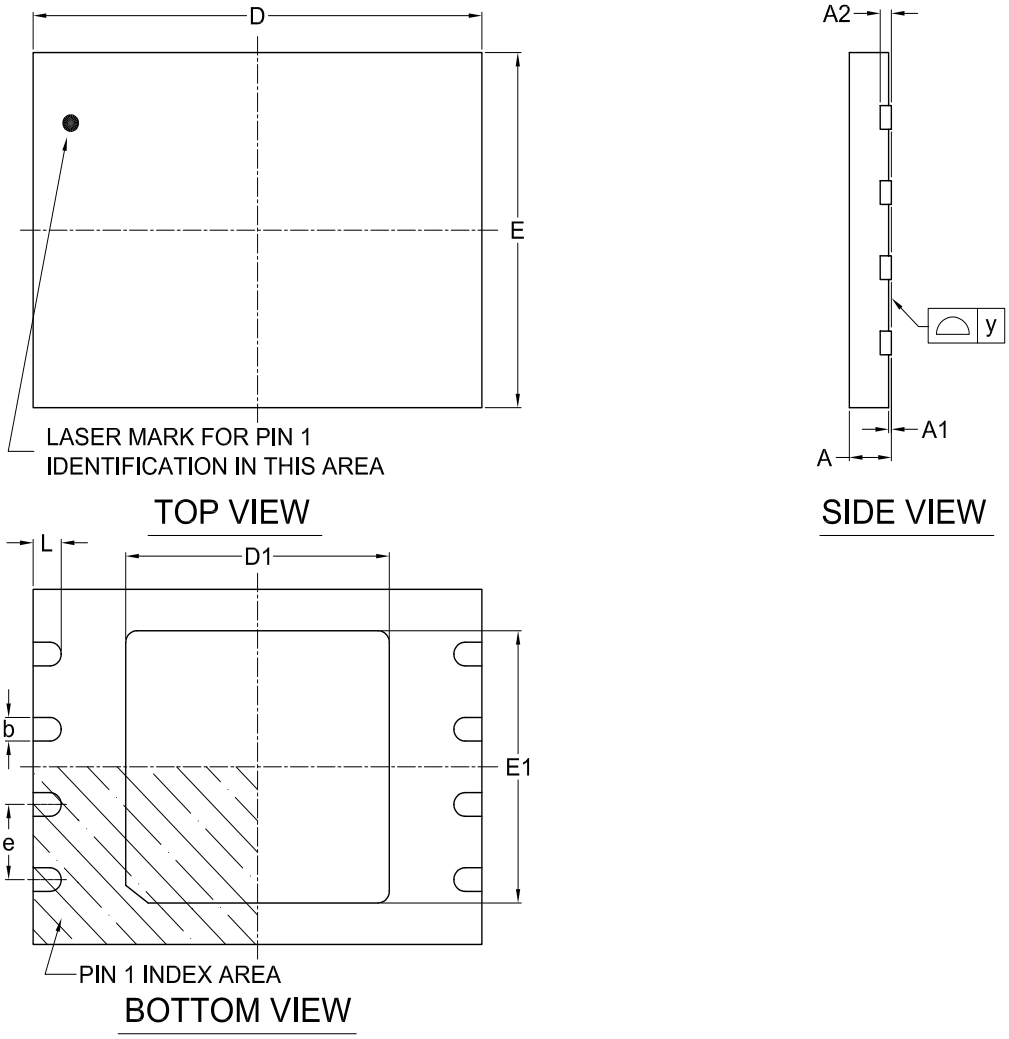

Note:

This package has an exposed metal pad underneath the package. It is recommended to leave the metal pad floating or to connect it to the same ground as the GND pin of the package. Do not connect the metal pad to any other voltage or signal line on the PCB. Avoid placing vias or traces underneath the metal pad. Connection of this metal pad to any other voltage or signal line can result in shorts and/or electrical malfunction of the device.

Dimensions (inch dimensions are derived from the original mm dimensions)

SYMBOL / UNIT		A	A1	A2	b	D	D1	E	E1	L	e	y
mm	Min.	0.70	---	---	0.35	7.90	4.60	5.90	4.50	0.40	---	0.00
	Nom.	---	---	0.20	0.40	8.00	4.70	6.00	4.60	0.50	1.27	---
	Max.	0.80	0.05	---	0.48	8.10	4.80	6.10	4.70	0.60	---	0.08
Inch	Min.	0.028	---	---	0.014	0.311	0.181	0.232	0.177	0.016	---	0.00
	Nom.	---	---	0.008	0.016	0.315	0.185	0.236	0.181	0.020	0.05	---
	Max.	0.032	0.002	---	0.019	0.319	0.189	0.240	0.185	0.024	---	0.003

Dwg. No.	Revision	Reference			
		JEDEC	EIAJ		
6110-3402	8	MO-220			

20. REVISION HISTORY

Revision No.	Description	Page	Date
0.01	1. Added Security Register description	P61,62	APR/17/2012
	2. Modify the VIH/VIL	P88	
	3. Modify the overshoot from VCC+1.0V or -0.5V to VCC+2.0V or -2.0V	P86	
	4. Added Fast Boot Sequence	P51	
	5. Modified data retention from 10 years to 20 years	P4	
	6. Added Data Retention	P94	
	7. Corrected content error	P44,47,48,52,63, P65,70,74,77,84	
1.0	1. Removed "Advanced Information"	P4	OCT/23/2012
	2. Modified 16-SOP pin descriptions	P7	
	3. Updated Read/Write Fast Boot Register Sequence figures	P52	
	4. Modified SPB Lock Register table	P67	
	5. Optimize ISB1 & ISB2 spec	P88	
	6. Modified Min. tVSL from 500us to 800us.	P93	
	7. Corrected content error	P15,16,21,27~29,30, P36,50,62,74,88	
1.1	1. Modified RESET Timing definition	P84	DEC/26/2012
	2. Added Power Up/Down and Voltage Drop information	P93	
	3. Corrected content error	P9,13,50,62,66,89	
1.2	1. Added USPB information	P65,71	JUL/16/2013
	2. Added note on WP# setup	P37	
	3. Modified tSLCH & tCHSH (Min.) from 5ns to 3.4ns	P89	
	4. Corrected content error	P50,51,76,77, P86,87,89	
1.3	1. Updated parameters for DC/AC Characteristics	P88,89	OCT/31/2013
	2. Updated Erase and Programming Performance	P94	
	3. Content correction	P65~71	
	4. Modified VCC to Ground Potential parameter	P86	
1.4	1. Added Suspend/Resume symbols and values	P75,89,90	SEP/24/2014
	2. Description modification	P63,65~72	

Except for customized products which has been expressly identified in the applicable agreement, Macronix's products are designed, developed, and/or manufactured for ordinary business, industrial, personal, and/or household applications only, and not for use in any applications which may, directly or indirectly, cause death, personal injury, or severe property damages. In the event Macronix products are used in contradicted to their target usage above, the buyer shall take any and all actions to ensure said Macronix's product qualified for its actual use in accordance with the applicable laws and regulations; and Macronix as well as it's suppliers and/or distributors shall be released from any and all liability arisen therefrom.

Copyright© Macronix International Co., Ltd. 2012~2014. All rights reserved, including the trademarks and tradename thereof, such as Macronix, MXIC, MXIC Logo, MX Logo, Integrated Solutions Provider, NBit, Nbit, NBiit, Macronix NBit, eLiteFlash, HybridNVM, HybridFlash, XtraROM, Phines, KH Logo, BE-SONOS, KSMC, Kingtech, MXSMIO, Macronix vEE, Macronix MAP, Rich Audio, Rich Book, Rich TV, and FitCAM. The names and brands of third party referred thereto (if any) are for identification purposes only.

For the contact and order information, please visit Macronix's Web site at: http://www.macronix.com