MX23L6413

64M-BIT FLASH COMPATIBLE MASK ROM

FEATURES

- Bit organization
  - 4M x 16 (word mode)
- Fast access time
  - Random access:90ns(max.)
- Current
  - Operating:20mA
  - Standby:15uA
- Supply voltage
  - VCC : 2.7V~3.6V
  - VCCQ : 2.7V~3.6V
- Package
  - 48 ball mini BGA (8.0mm x 9.0mm, ball pitch 0.8mm, ball size 0.4mm)
- Temperature
  - -40 ~ 85°C

PIN DESCRIPTION

Symbol	Pin Function
A0~A20	Address Inputs
D0~D15	Data Outputs
CE#	Chip Enable Input
OE#	Output Enable Input
VCC	Power Supply Pin
VSS	Ground Pin
VCCQ	VCC Output Pin
NC	No Connection

PIN CONFIGURATION

48 mini BGA (Top View, Ball Down)

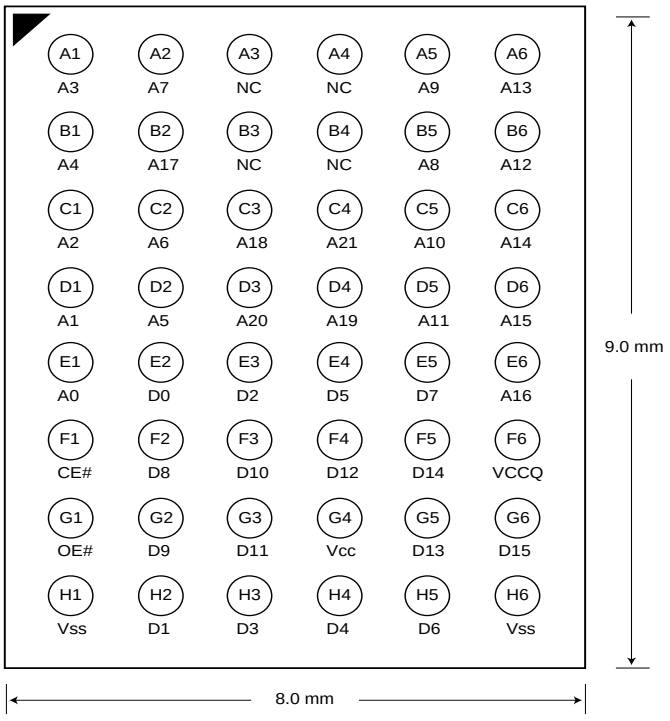

ORDER INFORMATION

Part No.	Speed	Package	Grade
MX23L6413XI-90G	90ns	48 ball mini BGA (Pb free)	Industrial
MX23L6413XI-10G	100ns	48 ball mini BGA (Pb free)	Industrial
MX23L6413XI-12G	120ns	48 ball mini BGA (Pb free)	Industrial

MODE SELECTION

CE#	OE#	D0~D15	Power
H	X	High Z	Stand-by
L	H	High Z	Active
L	L	D0~D15	Active

ABSOLUTE MAXIMUM RATINGS

Item	Symbol	Ratings
Voltage on any Pin Relative to VSS	VIN	-0.3V to 3.9V
Ambient Operating Temperature	Topr	-40°C to 85°C
Storage Temperature	Tstg	-65°C to 125°C

DC CHARACTERISTICS (Ta = -40°C ~ 85°C, VCC = 2.7V~3.6V)

Item	Symbol	MIN.	MAX.	Conditions
Output High Voltage	VOH	2.3V	-	IOH = -400uA
Output Low Voltage	VOL	-	0.4V	IOL = 1.6mA
Input High Voltage	VIH	2.1V	VCC+0.3V	
Input Low Voltage	VIL	-0.3V	0.8V	
Input Leakage Current	ILI	-	5uA	0V, VCC
Output Leakage Current	ILO	-	5uA	0V, VCC
Operating Current	ICC	-	40mA	f=5MHz, all output open
Standby Current (CMOS)	ISTB	-	15uA	CE#>VCC-0.2V
Input Capacitance	CIN	-	10pF	Ta = 25°C, f = 1MHZ
Output Capacitance	COUT	-	10pF	Ta = 25°C, f = 1MHZ

AC CHARACTERISTICS (Ta = -40°C ~ 85°C, VCC = 2.7V~3.6V)

Item	Symbol	23L6413-90		23L6413-10		23L6413-12	
		MIN.	MAX.	MIN.	MAX.	MIN.	MAX.
Read Cycle Time	tRC	90ns	-	100ns	-	120ns	-
Address Access Time	tAA	-	90ns	-	100ns	-	120ns
Chip Enable Access Time	tACE	-	90ns	-	100ns	-	120ns
Output Enable Time	tOE	-	25ns	-	30ns	-	50ns
Output Hold After Address	tOH	0ns	-	0ns	-	0ns	-
Output High Z Delay	tHZ	-	20ns	-	20ns	-	20ns

Note:Output high-impedance delay (tHZ) is measured from OE# or CE# going high, and this parameter guaranteed by design over the full voltage and temperature operating range - not tested.

AC Test Conditions

Input Pulse Levels	0V~ 3.0V
Input Rise and Fall Times	5ns
Input Timing Level	1.5V
Output Timing Level	1.5V
Output Load	See Figure

Note:
30pF output load capacitance for 80ns speed grade
100pF output load capacitance for 100ns and 120ns speed grade

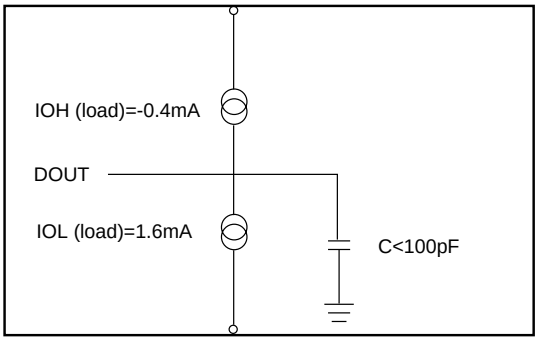

Note:No output loading is present in tester load board.
Active loading is used and under software programming control.
Output loading capacitance includes load board's and all stray capacitance.

TIMING DIAGRAM

RANDOM READ

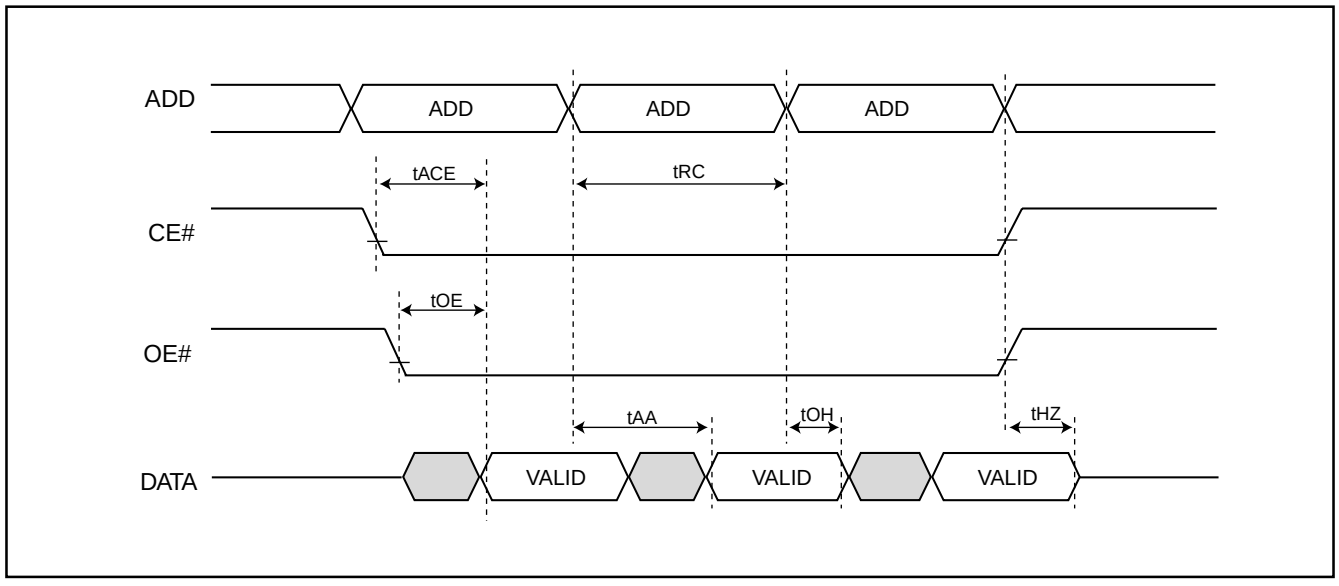

PACKAGE INFORMATION

Title: **Package Outline for CSP 48BALL(8X9X1.3MM,BALL PITCH 0.8MM,BALL DIAMETER 0.4MM)**

TOP VIEW

BOTTOM VIEW

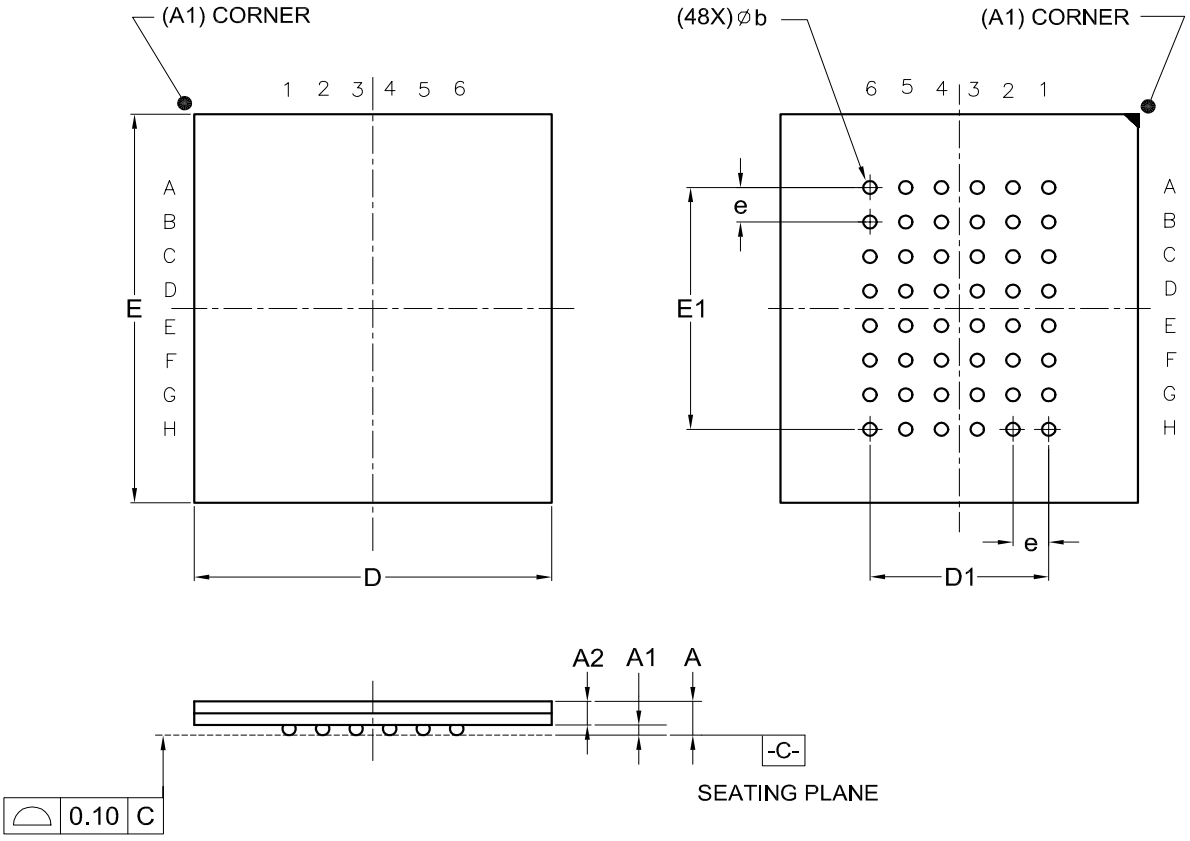

Dimensions (inch dimensions are derived from the original mm dimensions)

SYMBOL / UNIT		A	A1	A2	b	D	D1	E	E1	e
mm	Min.	---	0.25	0.65	0.35	7.90		8.90		
	Nom.	---	0.30	---	0.40	8.00	4.00	9.00	5.60	0.80
	Max.	1.30	0.35	---	0.45	8.10		9.10		
Inch	Min.	—	0.010	0.026	0.014	0.311		0.350		
	Nom.	—	0.012	---	0.016	0.315	0.157	0.354	0.220	0.031
	Max.	0.051	0.014	---	0.018	0.319		0.358		

DWG.NO.	REVISION	REFERENCE			ISSUE DATE
		JEDEC	EIAJ		
6110-4212	4	MO-219			12-12-'03

REVISION HISTORY

Revision No.	Description	Page	Date
1.1	1. Package information update	P5~6	NOV/08/2002
1.2	1. Remove 48-TSOP type	P1,2	MAR/18/2003
1.3	1. Corrected error	P1	FEB/17/2005

Macronix's products are not designed, manufactured, or intended for use for any high risk applications in which the failure of a single component could cause death, personal injury, severe physical damage, or other substantial harm to persons or property, such as life-support systems, high temperature automotive, medical, aircraft and military application. Macronix and its suppliers will not be liable to you and/or any third party for any claims, injuries or damages that may be incurred due to use of Macronix's products in the prohibited applications.

MACRONIX INTERNATIONAL CO., LTD.

Headquarters
Macronix, Int'l Co., Ltd.
16, Li-Hsin Road, Science Park,
Hsinchu, Taiwan, R.O.C.
Tel: +886-3-5786688
Fax: +886-3-5632888

Taipei Office
Macronix, Int'l Co., Ltd.
19F, 4, Min-Chuan E. Road, Sec. 3,
Taipei, Taiwan, R.O.C.
Tel: +886-2-2509-3300
Fax: +886-2-2509-2200

Macronix America, Inc.
680 North McCarthy Blvd.
Milpitas, CA 95035, U.S.A.
Tel: +1-408-262-8887
Fax: +1-408-262-8810
Email: sales.northamerica@macronix.com

Macronix Europe N.V.
Koningin Astridlaan 59, Bus 1
1780 Wemmel Belgium
Tel: +32-2-456-8020
Fax: +32-2-456-8021

Macronix Japan Cayman Islands Ltd.
NKF Bldg. 5F, 1-2 Higashida-cho,
Kawasaki-ku Kawasaki-shi,
Kanagawa Pref. 210-0005, Japan
Tel: +81-44-246-9100
Fax: +81-44-246-9105

Singapore Office
Macronix Pte. Ltd.
1 Marine Parade Central
#11-03 Parkway Centre
Singapore 449408
Tel: +65-6346-5505
Fax: +65-6348-8096

Macronix (Hong Kong) Co., Limited.
702-703, 7/F, Building 9,
Hong Kong Science Park,
5 Science Park West Avenue, Sha Tin, N.T.
Tel: +86-852-2607-4289
Fax: +86-852-2607-4229

http : //www.macronix.com

MACRONIX INTERNATIONAL CO., LTD. reserves the right to change product and specifications without notice.