MACRONIX
INTERNATIONAL CO., LTD.

MX23C1610

5 Volt 16-Mbit (2M x 8 / 1M x 16) Mask ROM

FEATURES

- Bit organization
  - 2M x 8 (byte mode)
  - 1M x 16 (word mode)
- Fast access time
  - Random access: 100ns (max.)
- Current
  - Operating: 60mA
  - Standby: 50uA
- Supply voltage
  - 5V±10%
- Package
  - 44 pin SOP (500mil)
  - 48 pin TSOP (12mm x 20mm)
  - 42 pin DIP (600mil)
  - 44 pin TSOP (Type II)

ORDER INFORMATION

Part No.	Access	Package
MX23C1610MC-10	100ns	44 pin SOP
MX23C1610MC-12	120ns	44 pin SOP
MX23C1610MC-15	150ns	44 pin SOP
MX23C1610TC-10	100ns	48 pin TSOP
MX23C1610TC-12	120ns	48 pin TSOP
MX23C1610TC-15	150ns	48 pin TSOP
MX23C1610RC-10	100ns	48 pin TSOP (Reverse type)
MX23C1610RC-12	120ns	48 pin TSOP (Reverse type)
MX23C1610RC-15	150ns	48 pin TSOP (Reverse type)
MX23C1610PC-10	100ns	42 pin DIP
MX23C1610PC-12	120ns	42 pin DIP
MX23C1610PC-15	150ns	42 pin DIP
MX23C1610YC-10	100ns	44 pin TSOP
MX23C1610YC-12	120ns	44 pin TSOP
MX23C1610YC-15	150ns	44 pin TSOP

PIN CONFIGURATION

48 TSOP (Normal Type)



48 TSOP (Reverse Type)

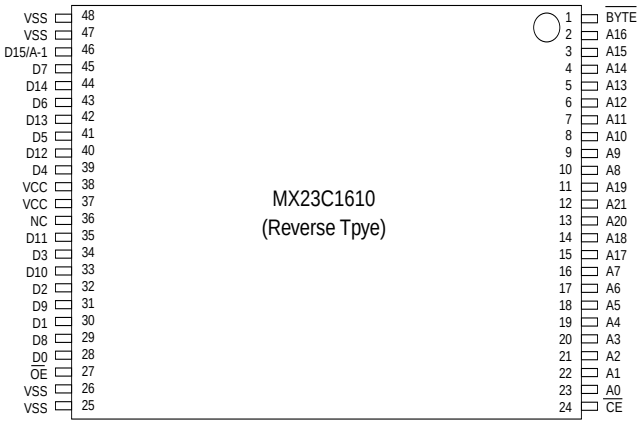

44 SOP/44 TSOP

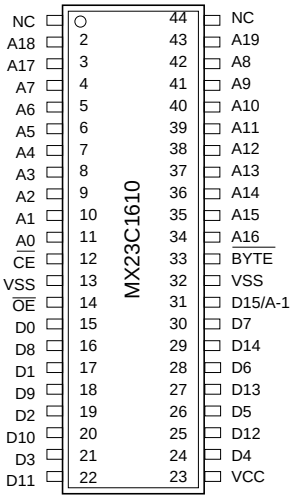

42 PDIP

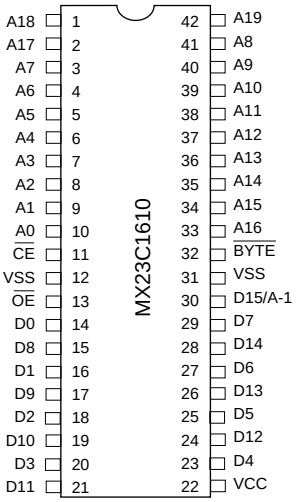

PIN DESCRIPTION

Symbol	Pin Function
A0~A19	Address Inputs
D0~D14	Data Outputs
D15/A-1	D15 (Word Mode)/ LSB Address (Byte Mode)
$\overline{CE}$	Chip Enable Input
$\overline{OE}$	Output Enable Input
$\overline{Byte}$	Word/ Byte Mode Selection
VCC	Power Supply Pin
VSS	Ground Pin
NC	No Connection

MODE SELECTION

$\overline{CE}$	$\overline{OE}$	$\overline{Byte}$	D15/A-1	D0~D7	D8~D15	Mode	Power
H	X	X	X	High Z	High Z	-	Stand-by
L	H	X	X	High Z	High Z	-	Active
L	L	H	Output	D0~D7	D8~D15	Word	Active
L	L	L	Input	D0~D7	High Z	Byte	Active

BLOCK DIAGRAM

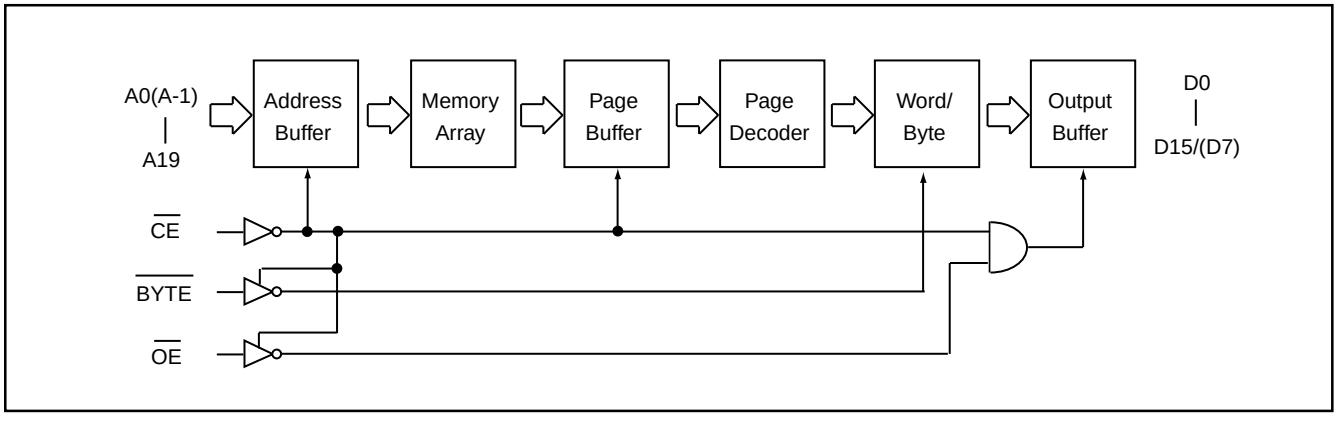

ABSOLUTE MAXIMUM RATINGS

Item	Symbol	Ratings
Voltage on any Pin Relative to VSS	VIN	-0.5V to 7.0V
Ambient Operating Temperature	Topr	0°C to 70°C
Storage Temperature	Tstg	-65°C to 125°C

Note: Minimum DC voltage on input or I/O pins is -0.5V. During voltage transitions, inputs may undershoot VSS to -1.3V for periods of up to 20ns. Maximum DC voltage on input or I/O pins is VCC+0.5V. During voltage transitions, input may overshoot VCC to VCC+2.0V for periods of up to 20ns.

DC CHARACTERISTICS (Ta = 0°C ~ 70°C, VCC = 5V±10%)

Item	Symbol	MIN.	MAX.	Conditions
Output High Voltage	VOH	2.4V	-	IOH = -1.0mA
Output Low Voltage	VOL	-	0.4V	IOL = 2.1mA
Input High Voltage	VIH	2.2V	VCC+0.3V	
Input Low Voltage	VIL	-0.3V	0.8V	
Input Leakage Current	ILI	-	10uA	0V, VCC
Output Leakage Current	ILO	-	10uA	0V, VCC
Operating Current	ICC1	-	60mA	f=5MHz, all output open, $\overline{CE}$=VIL, $\overline{OE}$=VIH
Standby Current (TTL)	ISTB1	-	1mA	$\overline{CE}$ = VIH
Standby Current (CMOS)	ISTB2	-	50uA	$\overline{CE}$>VCC-0.2V
Input Capacitance	CIN	-	10pF	Ta = 25°C, f = 1MHZ
Output Capacitance	COUT	-	10pF	Ta = 25°C, f = 1MHZ

AC CHARACTERISTICS (Ta = 0°C ~ 70°C, VCC = 5V±10%)

Item	Symbol	23C1610-10		23C1610-12		23C1610-15	
		MIN.	MAX.	MIN.	MAX.	MIN.	MAX.
Read Cycle Time	tRC	100ns	-	120ns	-	150ns	-
Address Access Time	tAA	-	100ns	-	120ns	-	150ns
Chip Enable Access Time	tACE	-	100ns	-	120ns	-	150ns
Output Enable Time	tOE	-	50ns	-	60ns	-	70ns
Output Hold After Address	tOH	0ns	-	0ns	-	0ns	-
Output High Z Delay	tHZ	-	20ns	-	20ns	-	20ns

Note:Output high-impedance delay (tHZ) is measured from $\overline{OE}$ or $\overline{CE}$ going high, and this parameter guaranteed by design over the full voltage and temperature operating range - not tested.

AC Test Conditions

Input Pulse Levels	0.4V~ 2.4V
Input Rise and Fall Times	10ns
Input Timing Level	1.5V
Output Timing Level	0.8V and 2.0V
Output Load	See Figure

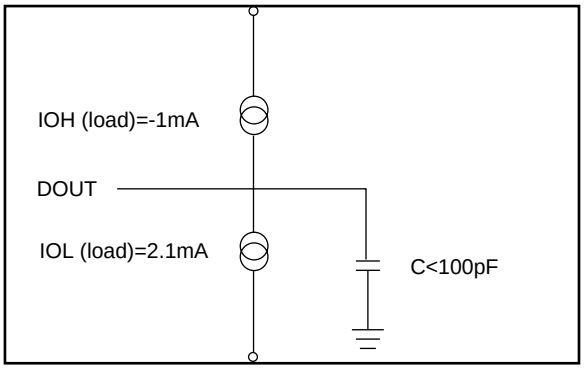

Note:
No output loading is present in tester load board.
Active loading is used and under software programming control.
Output loading capacitance includes load board's and all stray capacitance.

TIMING DIAGRAM

RANDOM READ

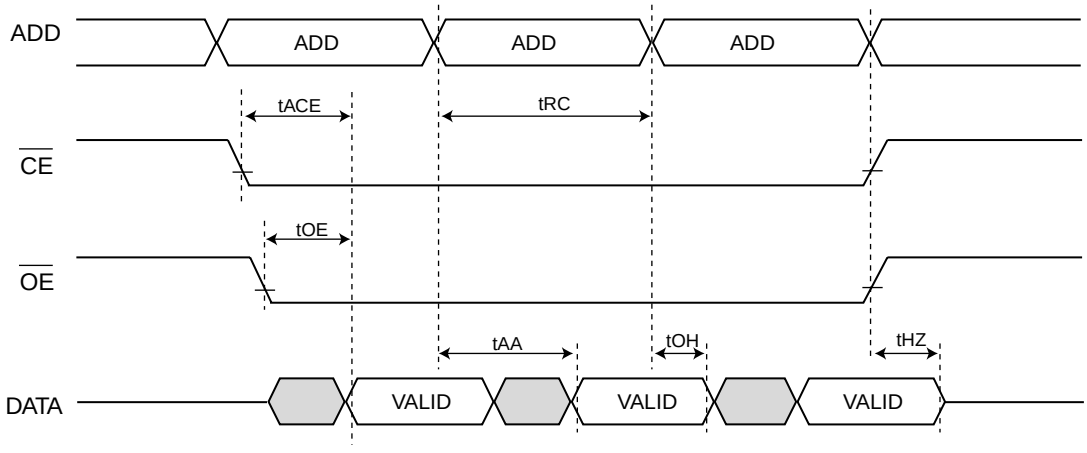

Note:$\overline{CE}$, $\overline{OE}$ are enable

PACKAGE INFORMATION

Title: **Package Outline for PDIP 42L (600MIL)**

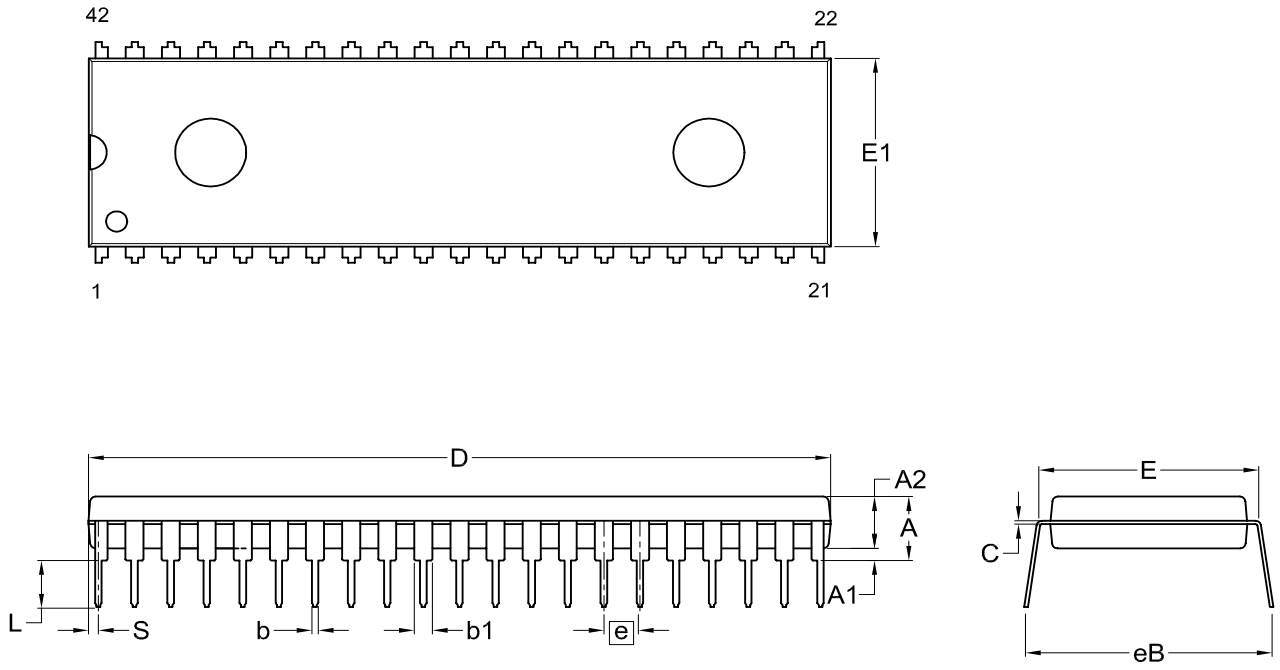

Dimensions (inch dimensions are derived from the original mm dimensions)

SYMBOL / UNIT		A	A1	A2	b	b1	C	D	E	E1	e	eB	L	S
mm	Min.	---	0.25	3.73	0.38	1.14	0.20	51.31	15.11	13.84		15.75	2.92	0.38
	Nom.	---	---	3.94	0.46	1.27	0.25	51.94	15.24	13.97	2.54	16.51	3.30	0.64
	Max.	4.90	0.76	4.14	0.53	1.40	0.30	52.57	15.37	14.10		17.27	3.68	0.89
Inch	Min.	---	0.010	0.147	0.015	0.045	0.008	2.020	0.595	0.545		0.620	0.115	0.015
	Nom.	---	---	0.155	0.018	0.050	0.010	2.045	0.600	0.550	0.100	0.650	0.130	0.025
	Max.	0.193	0.030	0.163	0.021	0.055	0.012	2.070	0.605	0.555		0.680	0.145	0.035

DWG.NO.	REVISION	REFERENCE			ISSUE DATE
		JEDEC	EIAJ		
6110-0202.5	8				11-24-'03

Title: **Package Outline for SOP 44L (500MIL)**

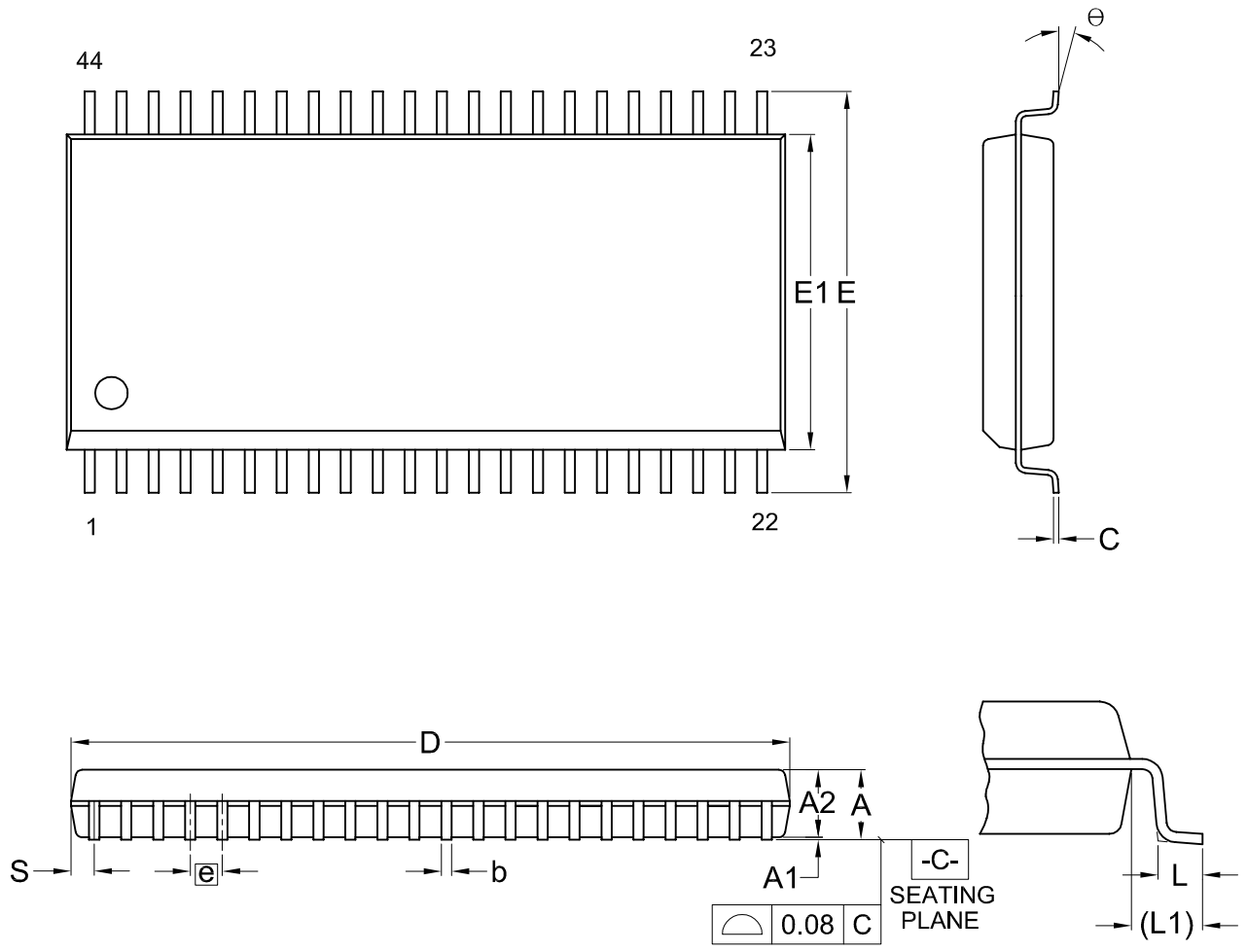

Dimensions (inch dimensions are derived from the original mm dimensions)

SYMBOL / UNIT		A	A1	A2	b	C	D	E	E1	e	L	L1	S	θ
mm	Min.	---	0.10	2.59	0.36	0.15	28.37	15.83	12.47		0.56	1.51	0.78	0
	Nom.	—	0.15	2.69	0.41	0.20	28.50	16.03	12.60	1.27	0.76	1.71	0.91	5
	Max.	3.00	0.20	2.80	0.51	0.25	28.63	16.23	12.73		0.96	1.91	1.04	10
Inch	Min.	—	0.004	0.102	0.014	0.006	1.117	0.623	0.491		0.022	0.059	0.031	0
	Nom.	—	0.006	0.106	0.016	0.008	1.122	0.631	0.496	0.050	0.030	0.067	0.036	5
	Max.	0.118	0.008	0.110	0.020	0.010	1.127	0.639	0.501		0.038	0.075	0.041	10

DWG.NO.	REVISION	REFERENCE			ISSUE DATE
		JEDEC	EIAJ		
6110-1405	6	MO-175			11-26-'03

Title: **Package Outline for TSOP(II) 44L (400MIL)**

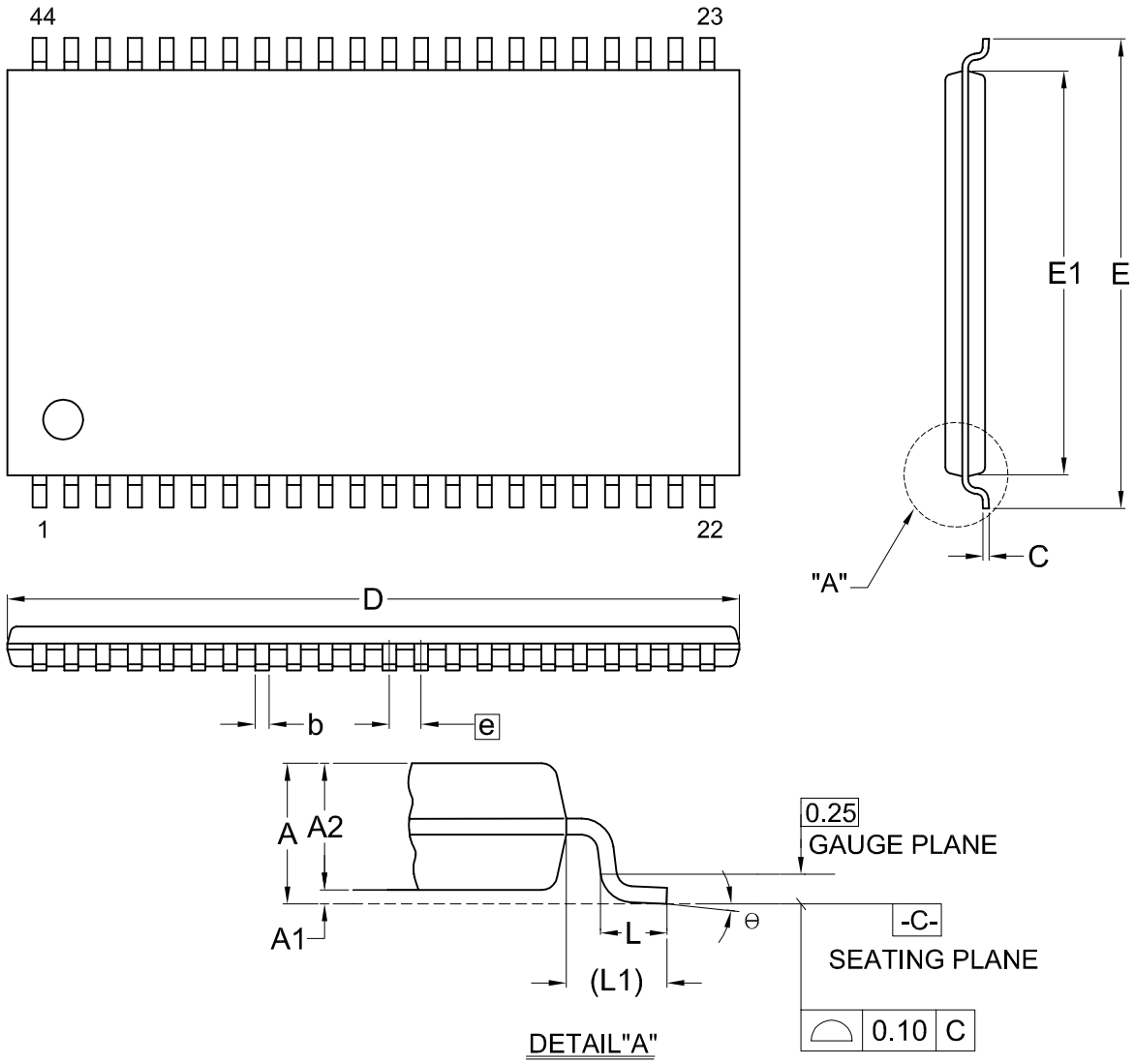

Dimensions (inch dimensions are derived from the original mm dimensions)

SYMBOL / UNIT		A	A1	A2	b	C	D	E	E1	e	L	L1	Θ
mm	Min.	---	0.05	0.95	0.30	0.12	18.31	11.56	10.06		0.40	0.70	0
	Nom.	---	0.10	1.00	0.35	0.15	18.41	11.76	10.16	0.80	0.50	0.80	5
	Max.	1.20	0.15	1.05	0.45	0.21	18.51	11.96	10.26		0.60	0.90	8
Inch	Min.	---	0.002	0.037	0.012	0.005	0.721	0.455	0.396		0.016	0.028	0
	Nom.	---	0.004	0.039	0.014	0.006	0.725	0.463	0.400	0.031	0.020	0.031	5
	Max.	0.047	0.006	0.041	0.018	0.008	0.729	0.471	0.404		0.024	0.035	8

DWG.NO.	REVISION	REFERENCE			ISSUE DATE
		JEDEC	EIAJ		
6110-1701	6	MS-024			12-01-'03

Title: Package Outline for TSOP(I) 48L (12X20mm)NORMAL FORM

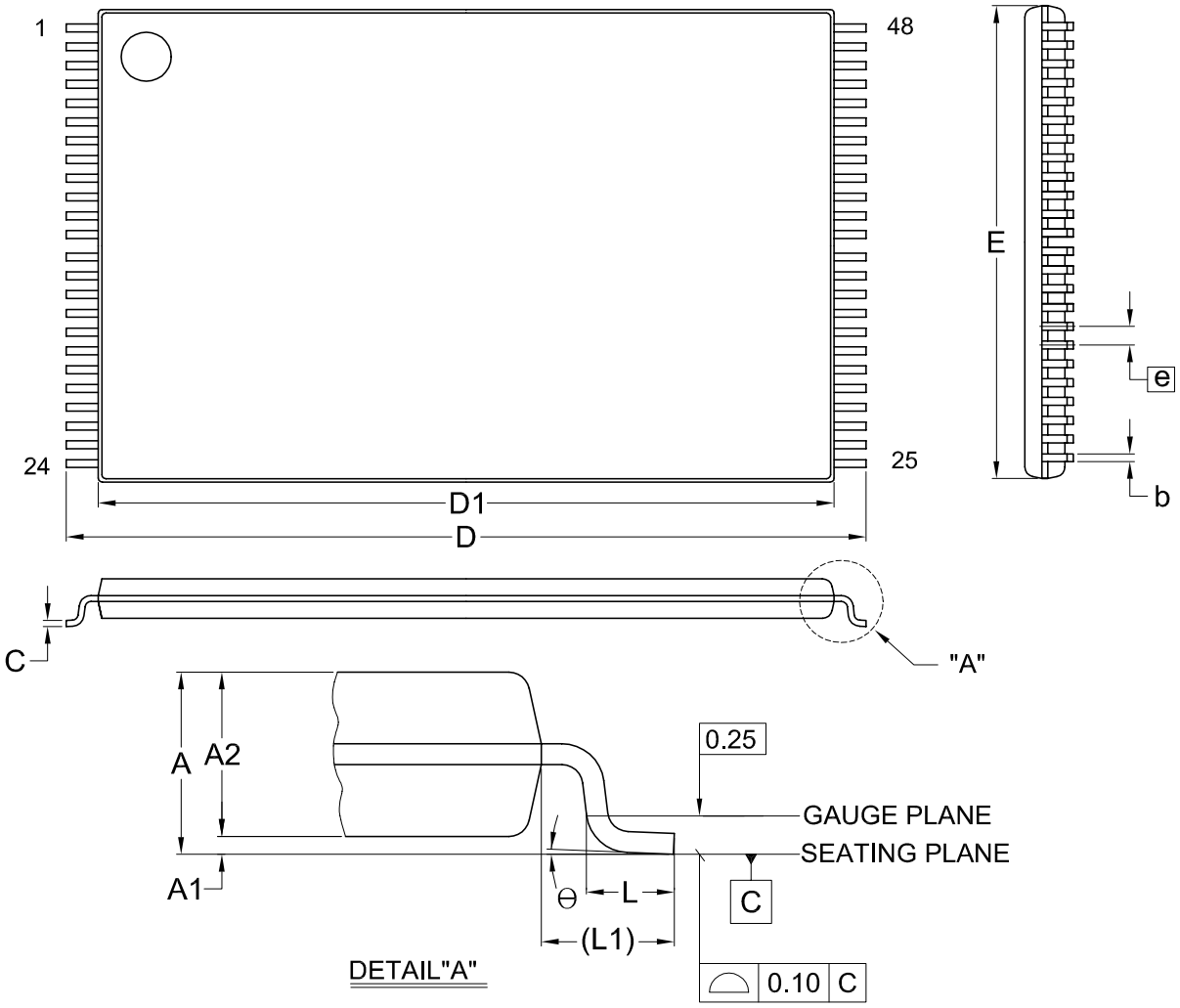

Dimensions (inch dimensions are derived from the original mm dimensions)

SYMBOL / UNIT		A	A1	A2	b	C	D	D1	E	e	L	L1	Θ
mm	Min.	—	0.05	0.95	0.17	0.10	19.80	18.30	11.90	—	0.50	0.70	0
	Nom.	---	0.10	1.00	0.20	0.13	20.00	18.40	12.00	0.50	0.60	0.80	5
	Max.	1.20	0.15	1.05	0.27	0.21	20.20	18.50	12.10	—	0.70	0.90	8
Inch	Min.	---	0.002	0.037	0.007	0.004	0.780	0.720	0.469	—	0.020	0.028	0
	Nom.	—	0.004	0.039	0.008	0.005	0.787	0.724	0.472	0.020	0.024	0.031	5
	Max.	0.047	0.006	0.041	0.011	0.008	0.795	0.728	0.476	—	0.028	0.035	8

DWG.NO.	REVISION	REFERENCE			ISSUE DATE
		JEDEC	EIAJ		
6110-1607	8	MO-142			2007/08/03

Title: Package Outline for TSOP(I) 48L (12X20mm)REVERSE FORM

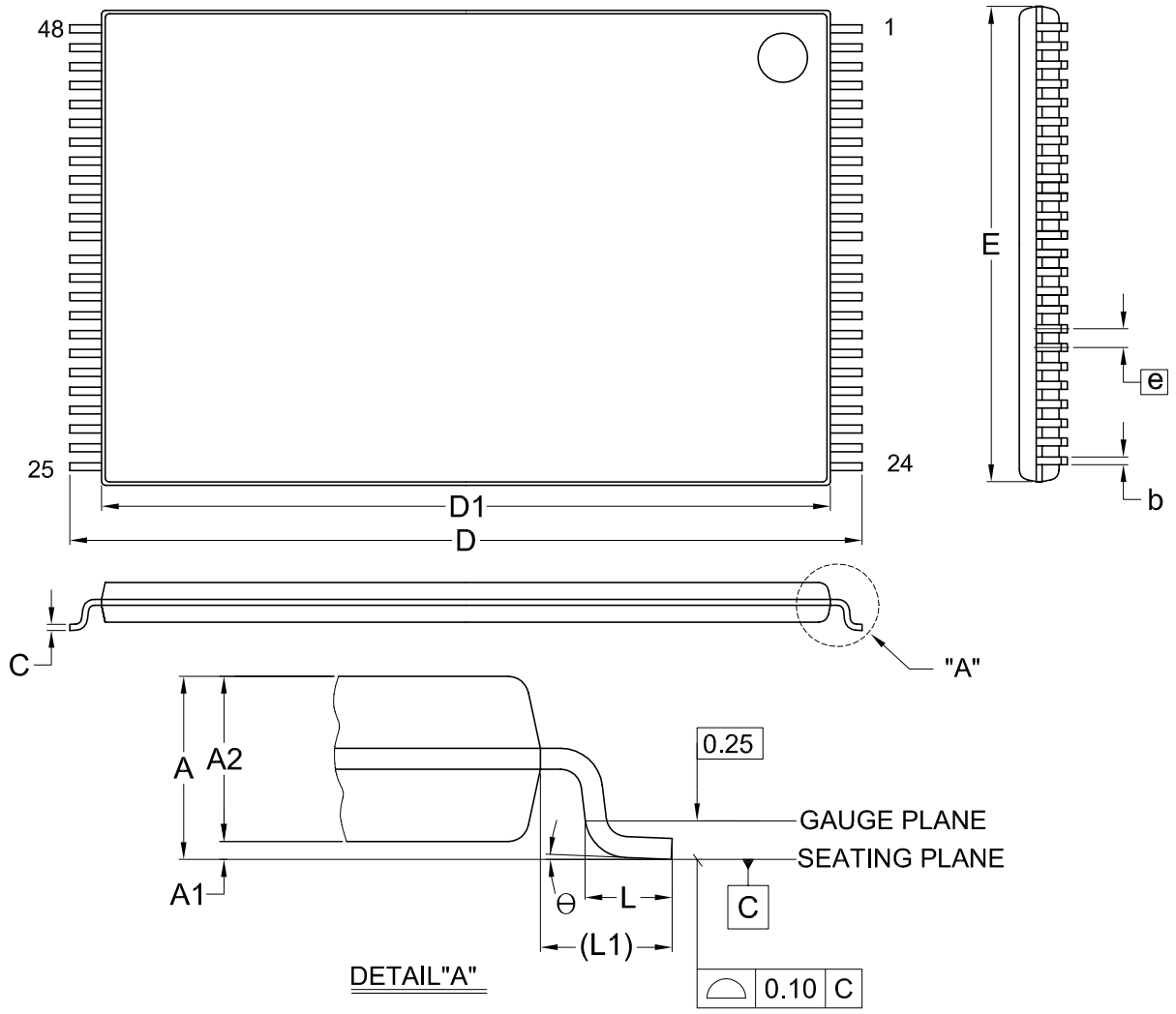

Dimensions (inch dimensions are derived from the original mm dimensions)

SYMBOL / UNIT		A	A1	A2	b	C	D	D1	E	e	L	L1	Θ
mm	Min.	---	0.05	0.95	0.17	0.10	19.80	18.30	11.90	---	0.50	0.70	0
	Nom.	---	0.10	1.00	0.20	0.13	20.00	18.40	12.00	0.50	0.60	0.80	5
	Max.	1.20	0.15	1.05	0.27	0.21	20.20	18.50	12.10	---	0.70	0.90	8
Inch	Min.	---	0.002	0.037	0.007	0.004	0.780	0.720	0.469	---	0.020	0.028	0
	Nom.	---	0.004	0.039	0.008	0.005	0.787	0.724	0.472	0.020	0.024	0.031	5
	Max.	0.047	0.006	0.041	0.011	0.008	0.795	0.728	0.476	---	0.028	0.035	8

DWG.NO.	REVISION	REFERENCE			ISSUE DATE
		JEDEC	EIAJ		
6110-1607.1	9	MO-142			2007/08/07

REVISION HISTORY

Revision	Description	Page	Date
2.9	DC Characteristics:The standby current (CMOS) ISTB2 is changed as 50 uA instead of 100uA. AC Characteristics:Add 90ns grade item, deleted 200ns grade item. The output enable time (tOE) is changed as 60ns instead of 70ns in 120ns grade item, and 70ns instead of 80ns in 150ns grade item. The output high Z delay is changed as 20ns instead of 70ns.		SEP/17/1997
3.0	AC Characteristics: tOH 10ns --> 0ns	P3	FEB/01/1999
3.1	Typing error correction	P1	JAN/18/2000
3.2	1.Added 44-pin TSOP(Type II) Package 2.Modify Package Information	P1,8 P5~7	JUL/18/2001
3.3	1.Delete Access Time:90ns	P1,3	OCT/18/2001
3.4	1. Modify Package Information	P5~9	NOV/21/2002
3.5	1. Modify 42-PDIP Package Information	P5	JUN/20/2003

Macronix's products are not designed, manufactured, or intended for use for any high risk applications in which the failure of a single component could cause death, personal injury, severe physical damage, or other substantial harm to persons or property, such as life-support systems, high temperature automotive, medical, aircraft and military application. Macronix and its suppliers will not be liable to you and/or any third party for any claims, injuries or damages that may be incurred due to use of Macronix's products in the prohibited applications.

MACRONIX INTERNATIONAL CO., LTD.

Headquarters
Macronix, Int'l Co., Ltd.
16, Li-Hsin Road, Science Park,
Hsinchu, Taiwan, R.O.C.
Tel: +886-3-5786688
Fax: +886-3-5632888

Taipei Office
Macronix, Int'l Co., Ltd.
19F, 4, Min-Chuan E. Road, Sec. 3,
Taipei, Taiwan, R.O.C.
Tel: +886-2-2509-3300
Fax: +886-2-2509-2200

Macronix America, Inc.
680 North McCarthy Blvd.
Milpitas, CA 95035, U.S.A.
Tel: +1-408-262-8887
Fax: +1-408-262-8810
Email: sales.northamerica@macronix.com

Macronix Europe N.V.
Koningin Astridlaan 59, Bus 1
1780 Wemmel Belgium
Tel: +32-2-456-8020
Fax: +32-2-456-8021

Macronix Japan Cayman Islands Ltd.
NKF Bldg. 5F, 1-2 Higashida-cho,
Kawasaki-ku Kawasaki-shi,
Kanagawa Pref. 210-0005, Japan
Tel: +81-44-246-9100
Fax: +81-44-246-9105

Singapore Office
Macronix Pte. Ltd.
1 Marine Parade Central
#11-03 Parkway Centre
Singapore 449408
Tel: +65-6346-5505
Fax: +65-6348-8096

Macronix (Hong Kong) Co., Limited.
702-703, 7/F, Building 9,
Hong Kong Science Park,
5 Science Park West Avenue, Sha Tin, N.T.
Tel: +86-852-2607-4289
Fax: +86-852-2607-4229

http : //www.macronix.com